No. PF-0L6B

TCM®

PARTS CATALOGUE

FORKLIFT TRUCK

Diesel Powered

FHD15C3Z
FHD15T3Z
FHD18C3Z
FHD18T3Z

TCM CORPORATION

ご使用のまえに

このパーツカタログは，TCM フォークリフトの構成部品を収録しています。

部品ご注文について

部品ご注文の際は，必ず車両の形式・仕様・製造番号（号車），部品番号および注文数を明示してください。車両の製造番号（号車）は車両銘板に表示しています。

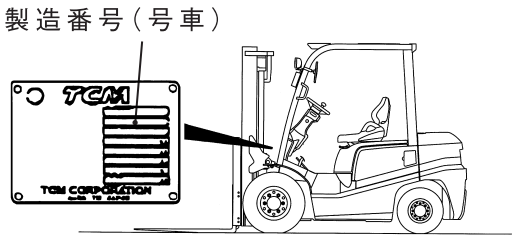

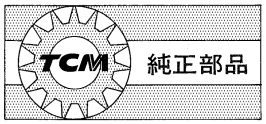

部品は，必ず「TCM 純正部品」をご使用ください。
純正部品以外の部品をご使用になり，故障が発生した場合は保証できません。

ご使用について

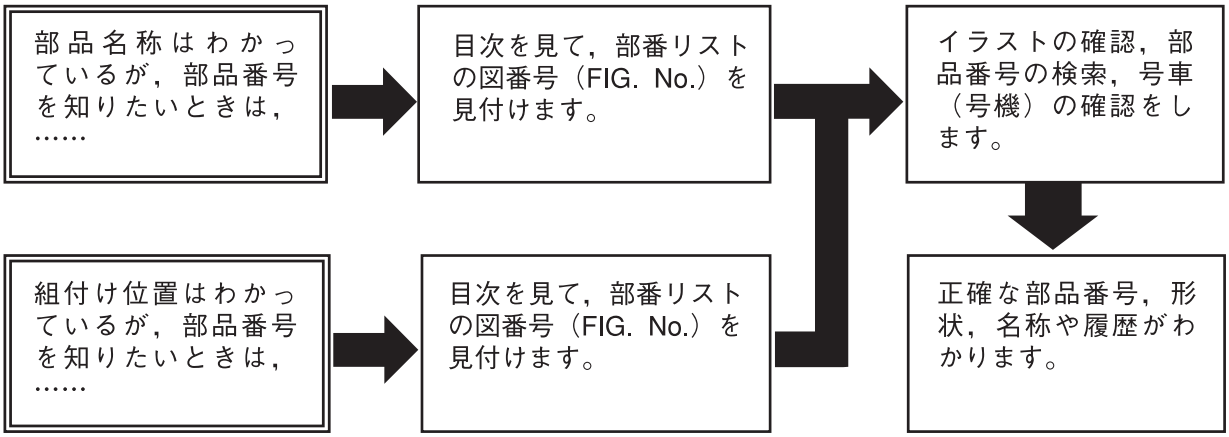

略語および記号

ＡＳＳＹ	組立品を示します。
ＲＨ	車両の前方向に向かって右側を示します。
ＬＨ	車両の前方向に向かって左側を示します。
ＡＲ	必要に応じた数を使用します。
＊	セットおよびキットの販売部品を示します。
Ｔ	厚みを示します。
＋	図示していません。
＃	単体販売しません。

部品は，品質向上のため予告なく変更することがありますので，あらかじめご了承ください。
詳細は，TCM 指定整備工場にご相談ください。

INTRODUCTION

This Parts Catalogue contains the component parts of the TCM FORKLIFT TRUCK.

How to order parts

When ordering, be sure to specify the model name, specification and serial number (machine number) of your machine, as well as the part number and desired quantity for each part. The machine serial number (machine number) is indicated on the machine name plate.

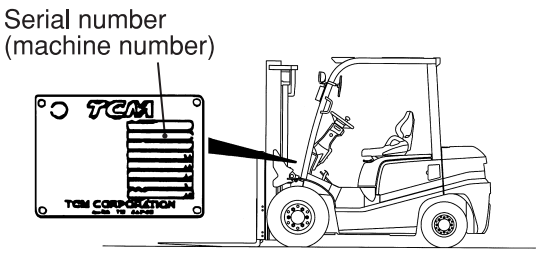

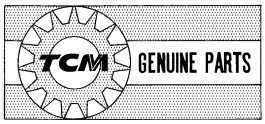

Always use "TCM's Genuine Parts". We cannot guarantee any loss or trouble attributable to other parts than ours.

How to use the Parts Catalogue

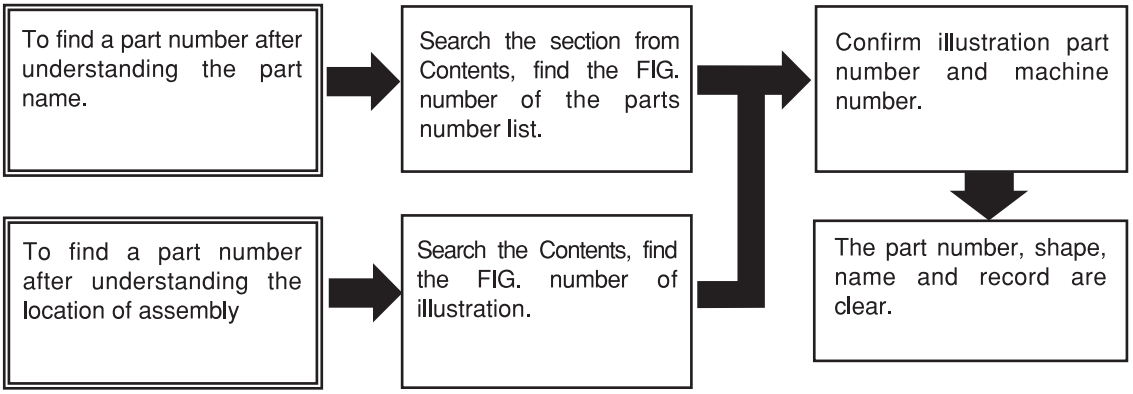

Abbreviations and symbols

ASSY ···	Assembled unit.
RH ·····	Right-hand when viewed forward on the truck.
LH ·····	Left-hand when viewed forward on the truck.
AR ·····	Quantity required.
* ·····	The marketable part set or kit.
T ·····	Thickness.
+ ·····	Not illustrated.
# ·····	Not sold separately.

Materals and specifications subject to change without notice.

CONTENTS　目次

CHASSIS シャーシ

a	FHD15C3Z	c	FHD18C3Z
b	FHD15T3Z	d	FHD18T3Z

SECTION　部門	a	b	c	d	FIG.NO.
ENGINE MOUNT ｴﾝｼﾞﾝﾏｳﾝﾄ	○	○	○	○	1
AIR CLEANER ｴｱｰｸﾘｰﾅ	○	○	○	○	2
AIR DUCT ｴｱｰﾀﾞｸﾄ	○	○	○	○	3
AIR DUCT [CAKB] ｴｱｰﾀﾞｸﾄ	○	○	○	○	4
COOLING UNIT ｸｰﾘﾝｸﾞﾕﾆｯﾄ	○	○	○	○	5
FAN SHROUD ﾌｧﾝｼｭﾗｳﾄﾞ	○	○	○	○	6
RADIATOR PARTS & RESERVE TANK ﾗｼﾞｴｰﾀﾊﾟｰﾂ&ﾘｻﾞｰﾌﾞﾀﾝｸ	○	○	○	○	7
FUEL SYSTEM ﾌｭｰｴﾙｼｽﾃﾑ	○	○	○	○	8
EXHAUST SYSTEM ｴｷｿﾞｰｽﾄｼｽﾃﾑ	○	○	○	○	9
EXHAUST SYSTEM [TUE] ｴｷｿﾞｰｽﾄｼｽﾃﾑ	○	○	○	○	10
FRONT TUBE & JOINT ﾌﾛﾝﾄﾁｭｰﾌﾞ&ｼﾞｮｲﾝﾄ	○	○	○	○	11
COMBINATION METER ｺﾝﾋﾞﾈｰｼｮﾝﾒｰﾀ	○	○	○	○	12
FRONT GUARD WIRE HARNESS (CLUTCH) ﾌﾛﾝﾄｶﾞｰﾄﾞﾜｲﾔﾊｰﾈｽ	○		○		13
FRONT GUARD WIRE HARNESS (TOR-CON) ﾌﾛﾝﾄｶﾞｰﾄﾞﾜｲﾔﾊｰﾈｽ		○		○	14
COMBINATION SWITCH (CLUTCH) ｺﾝﾋﾞﾈｰｼｮﾝｽｲｯﾁ	○		○		15
COMBINATION SWITCH (TOR-CON) ｺﾝﾋﾞﾈｰｼｮﾝｽｲｯﾁ		○		○	16
ELECTRIC PARTS (CLUTCH) ｴﾚｸﾄﾘｯｸﾊﾟｰﾂ	○		○		17
ELECTRIC PARTS (TOR-CON) ｴﾚｸﾄﾘｯｸﾊﾟｰﾂ		○		○	18
BATTERY ﾊﾞｯﾃﾘ	○	○	○	○	19
HEAD LAMP & FRONT COMBINATION LAMP ﾍｯﾄﾞﾗﾝﾌﾟ&ﾌﾛﾝﾄｺﾝﾋﾞﾈｰｼｮﾝﾗﾝﾌﾟ	○	○	○	○	20
REAR COMBINATION LAMP ﾘﾔｰｺﾝﾋﾞﾈｰｼｮﾝﾗﾝﾌﾟ	○	○	○	○	21

CONTENTS　目次

CHASSIS ｼｬｰｼ

a	FHD15C3Z	c	FHD18C3Z
b	FHD15T3Z	d	FHD18T3Z

SECTION　部門	a	b	c	d	FIG.NO.
LICENSE LAMP [LP] ﾗｲｾﾝｽﾗﾝﾌﾟ	○	○	○	○	22
REAR WORKING LIGHT [RWLR] ﾘﾔｰﾜｰｷﾝｸﾞﾗｲﾄ	○	○	○	○	23
REAR WORKING LIGHT [RWLL] ﾘﾔｰﾜｰｷﾝｸﾞﾗｲﾄ	○	○	○	○	24
REAR WORKING LIGHT [RWL2] ﾘﾔｰﾜｰｷﾝｸﾞﾗｲﾄ	○	○	○	○	25
REAR WORKING LIGHT [RWL/FE][RWL/TUE][RWL/CAKB] ﾘﾔｰﾜｰｷﾝｸﾞﾗｲﾄ	○	○	○	○	26
REAR WORKING LIGHT WIRE HARNESS [RWL] ﾘﾔｰﾜｰｷﾝｸﾞﾗｲﾄﾜｲﾔﾊｰﾈｽ	○	○	○	○	27
REAR WORKING LIGHT WIRE HARNESS [RWL/BBR] ﾘﾔｰﾜｰｷﾝｸﾞﾗｲﾄﾜｲﾔﾊｰﾈｽ	○	○	○	○	28
REVOLVING LIGHT [RLY][RLR] ﾘﾎﾞﾙﾋﾞﾝｸﾞﾗｲﾄ	○	○	○	○	29
REVOLVING LIGHT WIRE HARNESS [RLY][RLR] ﾘﾎﾞﾙﾋﾞﾝｸﾞﾗｲﾄﾜｲﾔﾊｰﾈｽ	○	○	○	○	30
SPOT LIGHT [SPL] ｽﾎﾟｯﾄﾗｲﾄ	○	○	○	○	31
BACK BUZZER ﾊﾞｯｸﾌﾞｻﾞｰ	○	○	○	○	32
HEATER UNIT [HR] ﾋｰﾀﾕﾆｯﾄ	○	○	○	○	33
HEATER VALVE & ELBOW [HR] ﾋｰﾀﾊﾞﾙﾌﾞ&ｴﾙﾎﾞ	○	○	○	○	34
FAN [FAN] ﾌｧﾝ	○	○	○	○	35
LIFT LOCK VALVE WIRE HARNESS [VLL] ﾘﾌﾄﾛｯｸﾊﾞﾙﾌﾞﾜｲﾔﾊｰﾈｽ	○	○	○	○	36
AMMETER [AM] ｱﾝﾒｰﾀ	○	○	○	○	37
SPEED METER [SM] ｽﾋﾟｰﾄﾞﾒｰﾀ	○	○	○	○	38
TORQUE CONVERTER THERMOMETER [TTM] ﾄﾙｸｺﾝﾊﾞｰﾀｻｰﾓﾒｰﾀ		○		○	39
TORQUE CONVERTER PRESSURE METER [TPM] ﾄﾙｸｺﾝﾊﾞｰﾀﾌﾟﾚｯｼｬﾒｰﾀ		○		○	40
SPEED DETECTOR UNIT [SAS] ｽﾋﾟｰﾄﾞﾃﾞｨﾃｸﾀﾕﾆｯﾄ	○	○	○	○	41
SPEED ALARM SYSTEM [SASB] ｽﾋﾟｰﾄﾞｱﾗｰﾑｼｽﾃﾑ	○	○	○	○	42

CONTENTS　目次

CHASSIS シャーシ

a	FHD15C3Z	c	FHD18C3Z
b	FHD15T3Z	d	FHD18T3Z

SECTION　部門	a	b	c	d	FIG.NO.
SPEED ALARM SYSTEM [SASR] ｽﾋﾟｰﾄﾞｱﾗｰﾑｼｽﾃﾑ	○	○	○	○	43
SPEED ALARM SYSTEM [SASC] ｽﾋﾟｰﾄﾞｱﾗｰﾑｼｽﾃﾑ	○	○	○	○	44
OK MONITOR [OKM] OKﾓﾆﾀ	○	○	○	○	45
INTERLOCK (CLUTCH):[SIL] ｲﾝﾀｰﾛｯｸ	○		○		46
INTERLOCK (TOR-CON):[SIL] ｲﾝﾀｰﾛｯｸ		○		○	47
DRIVE UNIT MOUNT (CLUTCH) ﾄﾞﾗｲﾌﾞﾕﾆｯﾄﾏｳﾝﾄ	○		○		48
DRIVE UNIT MOUNT (TOR-CON) ﾄﾞﾗｲﾌﾞﾕﾆｯﾄﾏｳﾝﾄ		○		○	49
CHANGE LEVER (CLUTCH) ﾁｪﾝｼﾞﾚﾊﾞｰ	○		○		50
CLUTCH (CLUTCH) ｸﾗｯﾁ	○		○		51
MISSION CASE (CLUTCH) ﾐｯｼｮﾝｹｰｽ	○		○		52
MISSION GEAR (CLUTCH) ﾐｯｼｮﾝｷﾞｬｰ	○		○		53
TORQUE CONVERTER CASE (TOR-CON) ﾄﾙｸｺﾝﾊﾞｰﾀｹｰｽ		○		○	54
CHARGING PUMP (TOR-CON) ﾁｬｰｼﾞﾝｸﾞﾎﾟﾝﾌﾟ		○		○	55
MISSION CASE (TOR-CON) ﾐｯｼｮﾝｹｰｽ		○		○	56
CLUTCH PACK (TOR-CON) ｸﾗｯﾁﾊﾟｯｸ		○		○	57
CONTROL VALVE (TOR-CON) ｺﾝﾄﾛｰﾙﾊﾞﾙﾌﾞ		○		○	58
DRIVE AXLE ﾄﾞﾗｲﾌﾞｱｸｽﾙ	○	○	○	○	59
DRUM HUB ﾄﾞﾗﾑﾊﾌﾞ	○	○	○	○	60
PROPELLER SHAFT ﾌﾟﾛﾍﾟﾗｼｬﾌﾄ	○	○	○	○	61
REDUCTION & DIFFERENTIAL ﾘﾀﾞｸｼｮﾝ&ﾃﾞﾌｧﾚﾝｼｬﾙ	○	○	○	○	62
REDUCTION ﾘﾀﾞｸｼｮﾝ	○	○	○	○	63

CONTENTS　目次

CHASSIS シャーシ

a	FHD15C3Z	c	FHD18C3Z
b	FHD15T3Z	d	FHD18T3Z

SECTION　部門	a	b	c	d	FIG.NO.
DIFFERENTIAL ﾃﾞﾌｧﾚﾝｼｬﾙ	○	○	○	○	64
WHEEL BRAKE ﾎｲｰﾙﾌﾞﾚｰｷ	○	○	○	○	65
STEERING WHEEL UNIT ｽﾃｱﾘﾝｸﾞﾎｲｰﾙﾕﾆｯﾄ	○	○	○	○	66
STEERING WHEEL ｽﾃｱﾘﾝｸﾞﾎｲｰﾙ	○	○	○	○	67
ORBITROL ｵｰﾋﾞｯﾄﾛｰﾙ	○	○	○	○	68
ORBITROL FITTING ｵｰﾋﾞｯﾄﾛｰﾙﾌｨｯﾃｨﾝｸﾞ	○	○	○	○	69
STEERING AXLE ｽﾃｱﾘﾝｸﾞｱｸｽﾙ	○	○	○	○	70
AXLE SUPPORT ｱｸｽﾙｻﾎﾟｰﾄ	○	○	○	○	71
HUB NUT ﾊﾌﾞﾅｯﾄ	○	○	○	○	72
FENDER [DD][SDD] ﾌｪﾝﾀﾞ	○	○	○	○	73
FRONT WHEEL (1.5T) ﾌﾛﾝﾄﾎｲｰﾙ	○	○			74
FRONT WHEEL (1.8T) ﾌﾛﾝﾄﾎｲｰﾙ			○	○	75
FRONT WHEEL (1.5T):[DR F] ﾌﾛﾝﾄﾎｲｰﾙ	○	○			76
FRONT WHEEL (1.5T):[TJ F][TJSF][TF][TS F] ﾌﾛﾝﾄﾎｲｰﾙ	○	○			77
FRONT WHEEL (1.8T):[TJ F][TJSF][TF][TS F] ﾌﾛﾝﾄﾎｲｰﾙ			○	○	78
FRONT WHEEL (1.5T):[(TJ F,TJSF,TF,TS F)/DR F] ﾌﾛﾝﾄﾎｲｰﾙ	○	○			79
FRONT WHEEL (1.5T):[TSUF][TUJF][TUSF][TUWF][TUGF] ﾌﾛﾝﾄﾎｲｰﾙ	○	○			80
FRONT WHEEL (1.8T):[TSUF][TUJF][TUSF][TUWF][TUGF] ﾌﾛﾝﾄﾎｲｰﾙ			○	○	81
FRONT WHEEL (1.5T):[TUJF/DR F] ﾌﾛﾝﾄﾎｲｰﾙ	○	○			82
FRONT WHEEL (1.5T):[TRAF] ﾌﾛﾝﾄﾎｲｰﾙ	○	○			83
FRONT WHEEL (1.8T):[TRAF] ﾌﾛﾝﾄﾎｲｰﾙ			○	○	84

CONTENTS　目次

CHASSIS シャーシ

a	FHD15C3Z	c	FHD18C3Z
b	FHD15T3Z	d	FHD18T3Z

SECTION　部門	a	b	c	d	FIG.NO.
FRONT WHEEL [TJ W][TW][TS W] ﾌﾛﾝﾄﾎｲｰﾙ	○	○	○	○	85
FRONT WHEEL [TUJW][TUSW][TUWW][TUGW] ﾌﾛﾝﾄﾎｲｰﾙ	○	○	○	○	86
FRONT WHEEL [TJ W65][TJSW65][TW65][TS W65] ﾌﾛﾝﾄﾎｲｰﾙ	○	○	○	○	87
FRONT WHEEL [TUJW65][TUSW65][TUWW65][TUGW65] ﾌﾛﾝﾄﾎｲｰﾙ	○	○	○	○	88
REAR WHEEL ﾘﾔｰﾎｲｰﾙ	○	○	○	○	89
REAR WHEEL [DR R] ﾘﾔｰﾎｲｰﾙ	○	○	○	○	90
REAR WHEEL [TJ R][TJSR][TR][TS R] ﾘﾔｰﾎｲｰﾙ	○	○	○	○	91
REAR WHEEL [(TJ R,TJSR,TR,TS R)/DR R] ﾘﾔｰﾎｲｰﾙ	○	○	○	○	92
REAR WHEEL [TSUR][TUJR][TUSR][TUWR][TUGR] ﾘﾔｰﾎｲｰﾙ	○	○	○	○	93
REAR WHEEL [TUJR/DR R] ﾘﾔｰﾎｲｰﾙ	○	○	○	○	94
REAR WHEEL [TRAR] ﾘﾔｰﾎｲｰﾙ	○	○	○	○	95
POWER CYLINDER ﾊﾟﾜｰｼﾘﾝﾀﾞ	○	○	○	○	96
POWER CYLINDER BOOT [PSB] ﾊﾟﾜｰｼﾘﾝﾀﾞﾌﾞｰﾂ	○	○	○	○	97
OVERHEAD GUARD ｵｰﾊﾞﾍｯﾄﾞｶﾞｰﾄﾞ	○	○	○	○	98
OVERHEAD GUARD [HGD] ｵｰﾊﾞﾍｯﾄﾞｶﾞｰﾄﾞ	○	○	○	○	99
FRONT LAMP BRACKET ﾌﾛﾝﾄﾗﾝﾌﾟﾌﾞﾗｹｯﾄ	○	○	○	○	100
FRONT LAMP BRACKET [HL][BKH] ﾌﾛﾝﾄﾗﾝﾌﾟﾌﾞﾗｹｯﾄ	○	○	○	○	101
REAR LAMP COVER ﾘﾔｰﾗﾝﾌﾟｶﾊﾞｰ	○	○	○	○	102
HEAD GUARD PARTS ﾍｯﾄﾞｶﾞｰﾄﾞﾊﾟｰﾂ	○	○	○	○	103
POP RIVET ﾎﾟｯﾌﾟﾘﾍﾞｯﾄ	○	○	○	○	104
POP RIVET [TUE][BBA][BBV][AW061][RWL][RRE][FE] ﾎﾟｯﾌﾟﾘﾍﾞｯﾄ	○	○	○	○	105

CONTENTS　目次

CHASSIS シャーシ

a	FHD15C3Z	c	FHD18C3Z
b	FHD15T3Z	d	FHD18T3Z

SECTION　部門	a	b	c	d	FIG.NO.
ACCEL PEDAL ｱｸｾﾙﾍﾟﾀﾞﾙ	○	○	○	○	106
FOOT PEDAL (CLUTCH) ﾌｯﾄﾍﾟﾀﾞﾙ	○		○		107
FOOT PEDAL (TOR-CON) ﾌｯﾄﾍﾟﾀﾞﾙ		○		○	108
FOOT PEDAL CYLINDER (CLUTCH) ﾌｯﾄﾍﾟﾀﾞﾙｼﾘﾝﾀﾞ	○		○		109
FOOT PEDAL CYLINDER (TOR-CON) ﾌｯﾄﾍﾟﾀﾞﾙｼﾘﾝﾀﾞ		○		○	110
BRAKE PIPE (CLUTCH) ﾌﾞﾚｰｷﾊﾟｲﾌﾟ	○		○		111
BRAKE PIPE (TOR-CON) ﾌﾞﾚｰｷﾊﾟｲﾌﾟ		○		○	112
FOOT PEDAL PARTS ﾌｯﾄﾍﾟﾀﾞﾙﾊﾟｰﾂ	○	○	○	○	113
CLUTCH MASTER CYLINDER (CLUTCH) ｸﾗｯﾁﾏｽﾀｼﾘﾝﾀﾞ	○		○		114
BRAKE MASTER CYLINDER ﾌﾞﾚｰｷﾏｽﾀｼﾘﾝﾀﾞ	○	○	○	○	115
CLUTCH RELEASE CYLINDER (CLUTCH) ｸﾗｯﾁﾘﾘｰｽｼﾘﾝﾀﾞ	○		○		116
BRAKE LEVER ﾌﾞﾚｰｷﾚﾊﾞｰ	○	○	○	○	117
FRAME ﾌﾚｰﾑ	○	○	○	○	118
OIL TANK ｵｲﾙﾀﾝｸ	○	○	○	○	119
OIL CAP & LEVEL ｵｲﾙｷｬｯﾌﾟ&ﾚﾍﾞﾙ	○	○	○	○	120
OIL CAP & LEVEL ｵｲﾙｷｬｯﾌﾟ&ﾚﾍﾞﾙ	○	○	○	○	120A
FUEL TANK ﾌｭｰｴﾙﾀﾝｸ	○	○	○	○	121
BALANCE WEIGHT ﾊﾞﾗﾝｽｳｴｲﾄ	○	○	○	○	122
BALANCE WEIGHT [HC] ﾊﾞﾗﾝｽｳｴｲﾄ	○	○	○	○	123
FRONT GUARD ﾌﾛﾝﾄｶﾞｰﾄﾞ	○	○	○	○	124
BONNET ﾎﾞﾝﾈｯﾄ	○	○	○	○	125

CONTENTS　目次

CHASSIS シャーシ

a	FHD15C3Z	c	FHD18C3Z
b	FHD15T3Z	d	FHD18T3Z

SECTION　部門	a	b	c	d	FIG.NO.
RADIATOR COVER ﾗｼﾞｴｰﾀｶﾊﾞｰ	○	○	○	○	126
BONNET HINGE ﾎﾞﾝﾈｯﾄﾋﾝｼﾞ	○	○	○	○	127
FLOOR BOARD ﾌﾛｱﾎﾞｰﾄﾞ	○	○	○	○	128
STEP & FLOOR MAT ｽﾃｯﾌﾟ&ﾌﾛｱﾏｯﾄ	○	○	○	○	129
FRONT COVER (CLUTCH) ﾌﾛﾝﾄｶﾊﾞｰ	○		○		130
FRONT COVER (TOR-CON) ﾌﾛﾝﾄｶﾊﾞｰ		○		○	131
SIDE COVER ｻｲﾄﾞｶﾊﾞｰ	○	○	○	○	132
FRONT SIDE COVER ﾌﾛﾝﾄｻｲﾄﾞｶﾊﾞｰ	○	○	○	○	133
SEAT ｼｰﾄ	○	○	○	○	134
SEAT [HGL] ｼｰﾄ	○	○	○	○	135
SEAT [SIL] ｼｰﾄ	○	○	○	○	136
SEAT [OKM][OKM/SIL] ｼｰﾄ	○	○	○	○	137
PUMP UNIT ﾎﾟﾝﾌﾟﾕﾆｯﾄ	○	○	○	○	138
CONTROL VALVE ｺﾝﾄﾛｰﾙﾊﾞﾙﾌﾞ	○	○	○	○	139
CONTROL VALVE [3SV] ｺﾝﾄﾛｰﾙﾊﾞﾙﾌﾞ	○	○	○	○	140
CONTROL VALVE [4SV] ｺﾝﾄﾛｰﾙﾊﾞﾙﾌﾞ	○	○	○	○	141
CONTROL VALVE [5SV] ｺﾝﾄﾛｰﾙﾊﾞﾙﾌﾞ	○	○	○	○	142
CONTROL VALVE (TOR-CON):[FIT] ｺﾝﾄﾛｰﾙﾊﾞﾙﾌﾞ		○		○	143
CONTROL VALVE (TOR-CON):[3SV/FIT] ｺﾝﾄﾛｰﾙﾊﾞﾙﾌﾞ		○		○	144
CONTROL VALVE (TOR-CON):[4SV/FIT] ｺﾝﾄﾛｰﾙﾊﾞﾙﾌﾞ		○		○	145
CONTROL VALVE FITTING ｺﾝﾄﾛｰﾙﾊﾞﾙﾌﾞﾌｨｯﾃｨﾝｸﾞ	○	○	○	○	146

CONTENTS　目次

CHASSIS ｼｬｰｼ

a	FHD15C3Z	c	FHD18C3Z
b	FHD15T3Z	d	FHD18T3Z

SECTION　部門	a	b	c	d	FIG.NO.
VALVE CONTROL ﾊﾞﾙﾌﾞｺﾝﾄﾛｰﾙ	○	○	○	○	147
VALVE CONTROL [3SV] ﾊﾞﾙﾌﾞｺﾝﾄﾛｰﾙ	○	○	○	○	148
VALVE CONTROL [4SV] ﾊﾞﾙﾌﾞｺﾝﾄﾛｰﾙ	○	○	○	○	149
VALVE CONTROL [5SV] ﾊﾞﾙﾌﾞｺﾝﾄﾛｰﾙ	○	○	○	○	150
VALVE CONTROL (TOR-CON):[FIT] ﾊﾞﾙﾌﾞｺﾝﾄﾛｰﾙ		○		○	151
VALVE CONTROL (TOR-CON):[3SV/FIT] ﾊﾞﾙﾌﾞｺﾝﾄﾛｰﾙ		○		○	152
VALVE CONTROL (TOR-CON):[4SV/FIT] ﾊﾞﾙﾌﾞｺﾝﾄﾛｰﾙ		○		○	153
VALVE CONTROL KNOB ﾊﾞﾙﾌﾞｺﾝﾄﾛｰﾙﾉﾌﾞ	○	○	○	○	154
VALVE CONTROL KNOB (TOR-CON):[FIT] ﾊﾞﾙﾌﾞｺﾝﾄﾛｰﾙﾉﾌﾞ		○		○	155
VALVE LEVER BRACKET (TOR-CON):[FIT] ﾊﾞﾙﾌﾞﾚﾊﾞｰﾌﾞﾗｹｯﾄ		○		○	156
SPOOL SECTION (LIFT) ｽﾌﾟｰﾙｾｸｼｮﾝ	○	○	○	○	157
SPOOL SECTION (LIFT)(TOR-CON):[FIT] ｽﾌﾟｰﾙｾｸｼｮﾝ		○		○	158
SPOOL SECTION (LIFT)[VLS] ｽﾌﾟｰﾙｾｸｼｮﾝ	○	○	○	○	159
SPOOL SECTION (TILT) ｽﾌﾟｰﾙｾｸｼｮﾝ	○	○	○	○	160
SPOOL SECTION (TILT)(TOR-CON):[FIT] ｽﾌﾟｰﾙｾｸｼｮﾝ		○		○	161
SPOOL SECTION (TILT)[VLS] ｽﾌﾟｰﾙｾｸｼｮﾝ	○	○	○	○	162
SPOOL SECTION (ATT)[3SV][4SV][5SV] ｽﾌﾟｰﾙｾｸｼｮﾝ	○	○	○	○	163
SPOOL SECTION (ATT)[4SV][5SV] ｽﾌﾟｰﾙｾｸｼｮﾝ	○	○	○	○	164
INLET SECTION (TOR-CON):[FIT] ｲﾝﾚｯﾄｾｸｼｮﾝ		○		○	165
SPOOL SECTION (ATT)(TOR-CON):[3SV/FIT][4SV/FIT] ｽﾌﾟｰﾙｾｸｼｮﾝ		○		○	166
HYDRAULIC LINE (MAIN)(1/4) ﾊｲﾄﾞﾛﾘｯｸﾗｲﾝ(ﾒｲﾝ)(1/4)	○	○	○	○	167

CONTENTS　目次

CHASSIS ｼｬｰｼ

a	FHD15C3Z	c	FHD18C3Z
b	FHD15T3Z	d	FHD18T3Z

SECTION　部門	a	b	c	d	FIG.NO.
HYDRAULIC LINE (MAIN)(2/4) ﾊｲﾄﾞﾛﾘｯｸﾗｲﾝ(ﾒｲﾝ)(2/4)	○	○	○	○	168
HYDRAULIC LINE (MAIN)(3/4) ﾊｲﾄﾞﾛﾘｯｸﾗｲﾝ(ﾒｲﾝ)(3/4)	○	○	○	○	169
HYDRAULIC LINE (MAIN)(4/4) ﾊｲﾄﾞﾛﾘｯｸﾗｲﾝ(ﾒｲﾝ)(4/4)	○	○	○	○	170
HYDRAULIC LINE (TOR-CON) ﾊｲﾄﾞﾛﾘｯｸﾗｲﾝ(ﾄﾙｺﾝ)		○		○	171
TILT CYLINDER ﾃｨﾙﾄｼﾘﾝﾀﾞ	○	○	○	○	172
TILT BOOT [TLB][FC] ﾃｨﾙﾄﾌﾞｰﾂ	○	○	○	○	173
DECAL (1/2) ﾃﾞｶﾙ(1/2)	○	○	○	○	174
DECAL (2/2) ﾃﾞｶﾙ(2/2)	○	○	○	○	175
DECAL (2/2)[EXB] ﾃﾞｶﾙ(2/2)	○	○	○	○	176
SERVICE TOOL [TO][EX] ｻｰﾋﾞｽﾂｰﾙ	○	○	○	○	177
TOOL BOX [TOB] ﾂｰﾙﾎﾞｯｸｽ	○	○	○	○	178
FRONT GLASS [AW061][AW071] ﾌﾛﾝﾄｶﾞﾗｽ	○	○	○	○	179
FRONT GLASS WIPER [AW061][AW071] ﾌﾛﾝﾄｶﾞﾗｽﾜｲﾊﾟ	○	○	○	○	180
WINDOW WASHER [AW071/WAS071] ｳｨﾝﾄﾞｳｫｯｼｬ	○	○	○	○	181
CANVAS CABIN [AW061] ｷｬﾝﾊﾞｽｷｬﾋﾞﾝ	○	○	○	○	182
CENTRAL LUBLICATION [CL] ｾﾝﾄﾗﾙﾙﾌﾞﾘｹｰｼｮﾝ	○	○	○	○	183
FIRE EXTINGUISHER [FE][FE M] ﾌｧｲﾔｲｸｽﾃｨﾝｸﾞｲｯｼｬ	○	○	○	○	184

CONTENTS　目次

MAST ﾏｽﾄ

a	FHD15C3Z	c	FHD18C3Z
b	FHD15T3Z	d	FHD18T3Z

SECTION　部門	a	b	c	d	FIG.NO.
[VM0A7,VM0A9]					
FORK [VM0A7,VM0A9] ﾌｫｰｸ	○	○	○	○	185
LIFT BRACKET [VM0A7,VM0A9] ﾘﾌﾄﾌﾞﾗｹｯﾄ	○	○	○	○	186
BACKREST [VM0A7,VM0A9] ﾊﾞｯｸﾚｽﾄ	○	○	○	○	187
MAST [VM0A7,VM0A9] ﾏｽﾄ	○	○	○	○	188
TILT GAUGE [VM0A7,VM0A9/(TG,PPC,PR,PRX,PLR)] ﾃｨﾙﾄｹﾞｰｼﾞ	○	○	○	○	189
LIFT CYLINDER [VM0A7,VM0A9] ﾘﾌﾄｼﾘﾝﾀﾞ	○	○	○	○	190
MAST PIPING [VM0A7,VM0A9] ﾏｽﾄﾊﾟｲﾋﾟﾝｸﾞ	○	○	○	○	191
[VFM0A7]					
FORK [VFM0A7] ﾌｫｰｸ	○	○	○	○	192
LIFT BRACKET [VFM0A7] ﾘﾌﾄﾌﾞﾗｹｯﾄ	○	○	○	○	193
BACKREST [VFM0A7] ﾊﾞｯｸﾚｽﾄ	○	○	○	○	194
MAST [VFM0A7] ﾏｽﾄ	○	○	○	○	195
LIFT CYLINDER (FRONT)[VFM0A7] ﾘﾌﾄｼﾘﾝﾀﾞ(ﾌﾛﾝﾄ)	○	○	○	○	196
LIFT CYLINDER (REAR)[VFM0A7] ﾘﾌﾄｼﾘﾝﾀﾞ(ﾘﾔｰ)	○	○	○	○	197
MAST PIPING [VFM0A7] ﾏｽﾄﾊﾟｲﾋﾟﾝｸﾞ	○	○	○	○	198

CONTENTS　目次

MAST ﾏｽﾄ

a	FHD15C3Z	c	FHD18C3Z
b	FHD15T3Z	d	FHD18T3Z

SECTION　部門	a	b	c	d	FIG.NO.
[VFHM0A7]					
FORK [VFHM0A7] ﾌｫｰｸ	○	○	○	○	199
LIFT BRACKET [VFHM0A7] ﾘﾌﾄﾌﾞﾗｹｯﾄ	○	○	○	○	200
BACKREST [VFHM0A7] ﾊﾞｯｸﾚｽﾄ	○	○	○	○	201
MAST [VFHM0A7] ﾏｽﾄ	○	○	○	○	202
LIFT CYLINDER (FRONT)[VFHM0A7] ﾘﾌﾄｼﾘﾝﾀﾞ	○	○	○	○	203
LIFT CYLINDER (REAR)[VFHM0A7] ﾘﾌﾄｼﾘﾝﾀﾞ	○	○	○	○	204
MAST PIPING [VFHM0A7] ﾏｽﾄﾊﾟｲﾋﾟﾝｸﾞ	○	○	○	○	205

FIG.1 ENGINE MOUNT

(F7Z11020) エンジンマウント

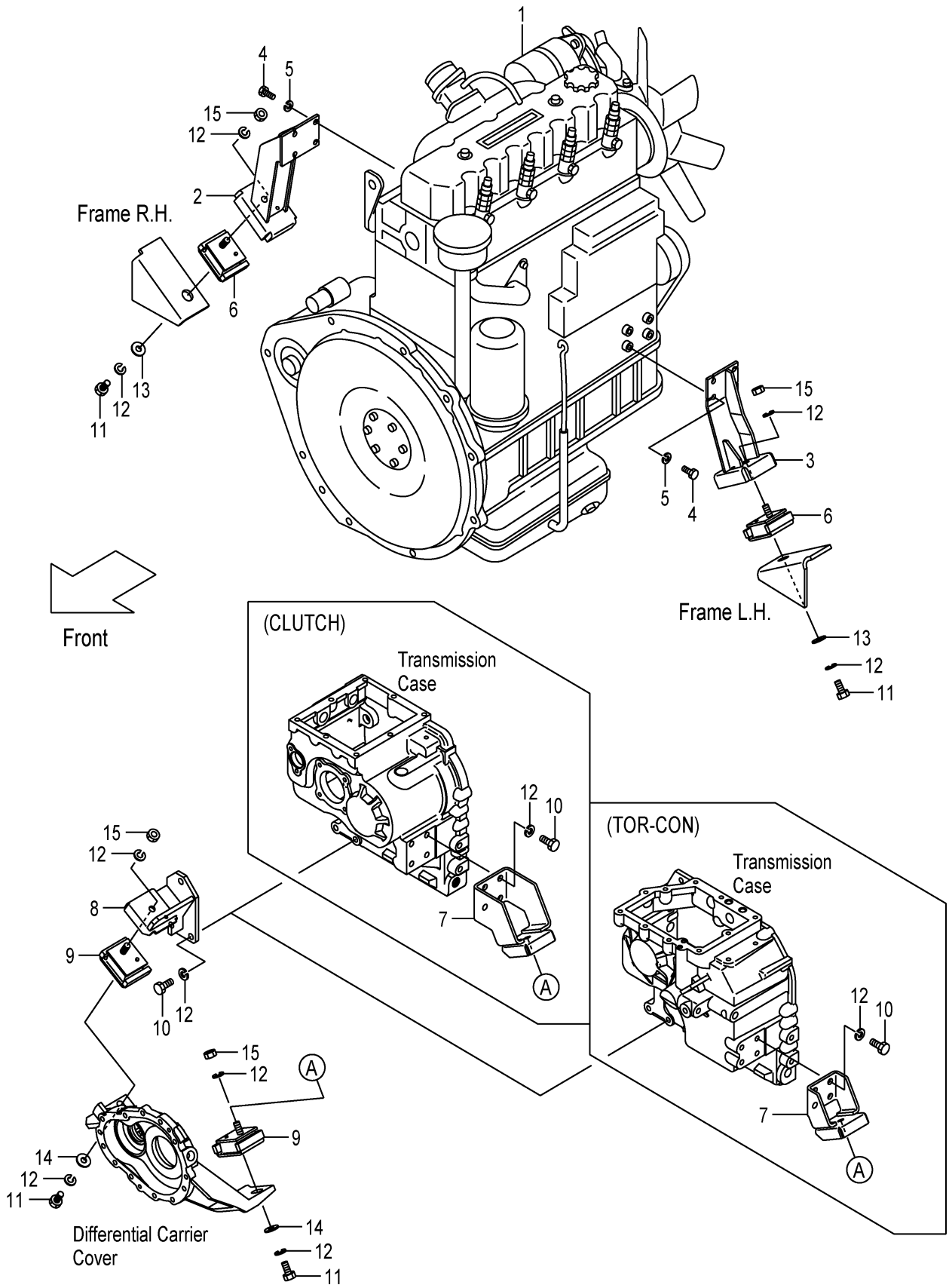

FIG.1

(F7Z11020)

A:FHD15C3Z FHD18C3Z
B:FHD15T3Z FHD18T3Z

Item No	Part No.	Mark	Description		Req'd	Remarks : Serial No.
1	20L71-00101		ENGINE,C240	ｴﾝｼﾞﾝ	1	
2	22U51-00201		BRACKET,ENGINE,RH	ﾌﾞﾗｹｯﾄ	1	
3	22U51-00212		BRACKET,ENGINE,LH	ﾌﾞﾗｹｯﾄ	1	
4	01106-10020		BOLT	ﾎﾞﾙﾄ	8	
5	02011-00010		WASHER	ﾜｯｼｬ	8	
6	22N51-00161		RUBBER,CUSHION	ﾗﾊﾞｰ	2	
7	22N41-00201		BRACKET,FRONT,LH	ﾌﾞﾗｹｯﾄ	1	A
-	22N51-00201		BRACKET,FRONT,LH	ﾌﾞﾗｹｯﾄ	1	B
8	22N51-00211		BRACKET,FRONT,RH	ﾌﾞﾗｹｯﾄ	1	
9	22N51-00141		RUBBER,CUSHION	ﾗﾊﾞｰ	2	
10	01103-12030		BOLT	ﾎﾞﾙﾄ	7	
11	01103-12025		BOLT	ﾎﾞﾙﾄ	4	
12	02011-00012		WASHER	ﾜｯｼｬ	15	
13	256C6-32011		WASHER	ﾜｯｼｬ	2	
14	256C9-52372		WASHER	ﾜｯｼｬ	2	
15	01400-00012		NUT	ﾅｯﾄ	4	A
-	01400-00010		NUT	ﾅｯﾄ	4	B

FIG.2 AIR CLEANER

(F7Z11040) エアークリーナ

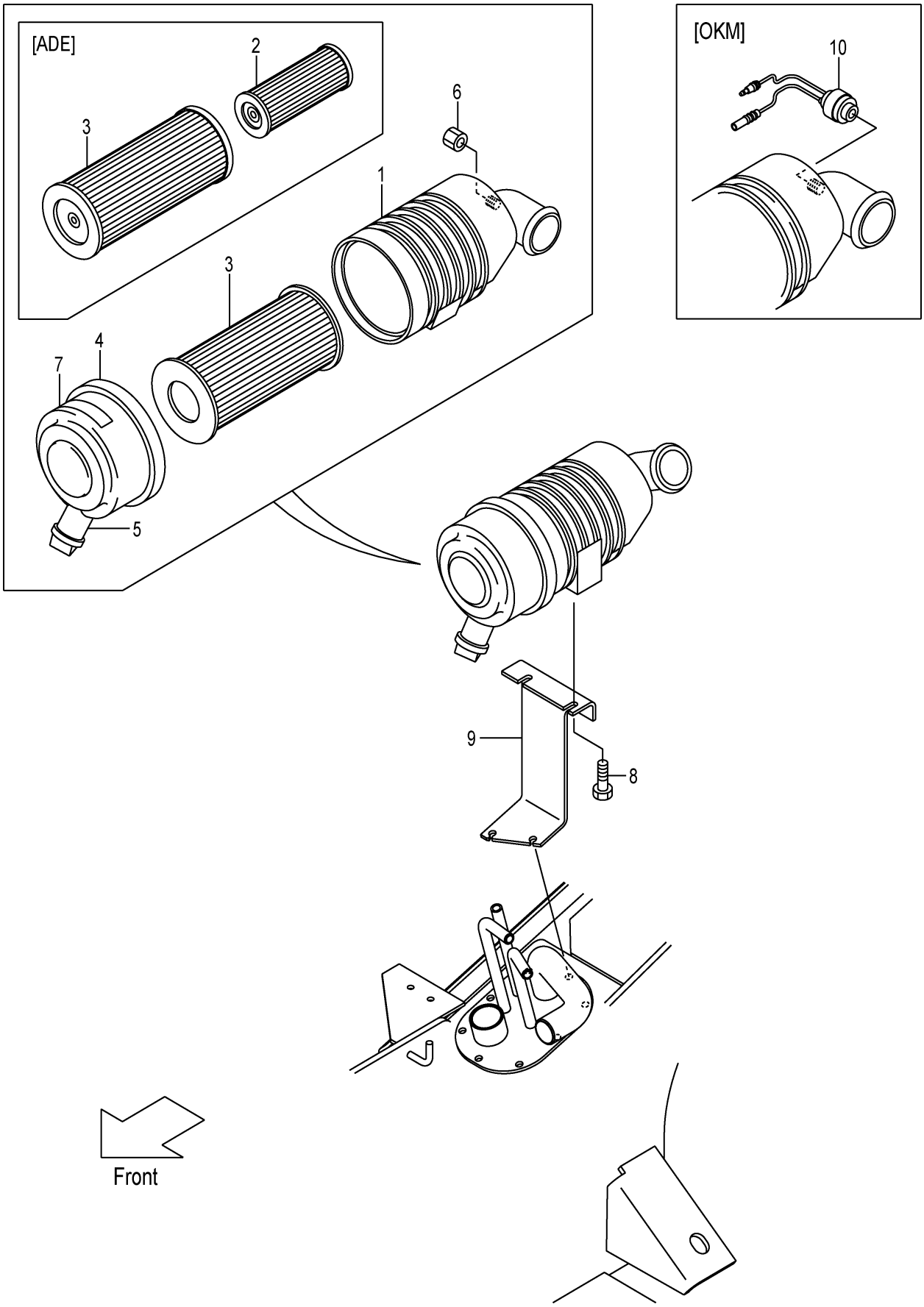

FIG.2

(F7Z11040)

A:FHD15C3Z FHD15T3Z FHD18C3Z FHD18T3Z

Item No	Part No.	Mark	Description		Req'd	Remarks : Serial No.
A1	216G1-02051		CLEANER-ASSY,AIR	ｴｱｰｸﾘｰﾅｱｯｾﾝ	1	INC.1,3-7
-	516G0-60011		CLEANER-ASSY,AIR	ｴｱｰｸﾘｰﾅｱｯｾﾝ	1	[ADE] INC.1-7
1	NO PART NO.	#	BODY	ﾎﾞﾃﾞｨ	1	
2	213T1-02021		ELEMENT,INNER	ｴﾚﾒﾝﾄ	1	[ADE]
3	256C1-08011		ELEMENT,OUTER	ｴﾚﾒﾝﾄ	1	
-	213T1-02011		ELEMENT,OUTER	ｴﾚﾒﾝﾄ	1	[ADE]
4	228F1-02211		COVER	ｶﾊﾞｰ	1	
5	256A1-08031		VALVE,VACUATOR	ﾊﾞﾙﾌﾞ	1	
6	53651-12551		CAP,NIPPLE	ｷｬｯﾌﾟ	1	
7	216G1-02311		LABEL	ﾗﾍﾞﾙ	1	
-	516G0-62001		LABEL	ﾗﾍﾞﾙ	1	[ADE]
8	01185-08016		BOLT	ﾎﾞﾙﾄ	2	
9	20L71-02001		BRACKET,AIR-CLEANER	ﾌﾞﾗｹｯﾄ	1	
10	522A1-10201		SENSOR,762MM	ｾﾝｻ	1	[OKM]

FIG.3 AIR DUCT

(F7Z11060) エアーダクト

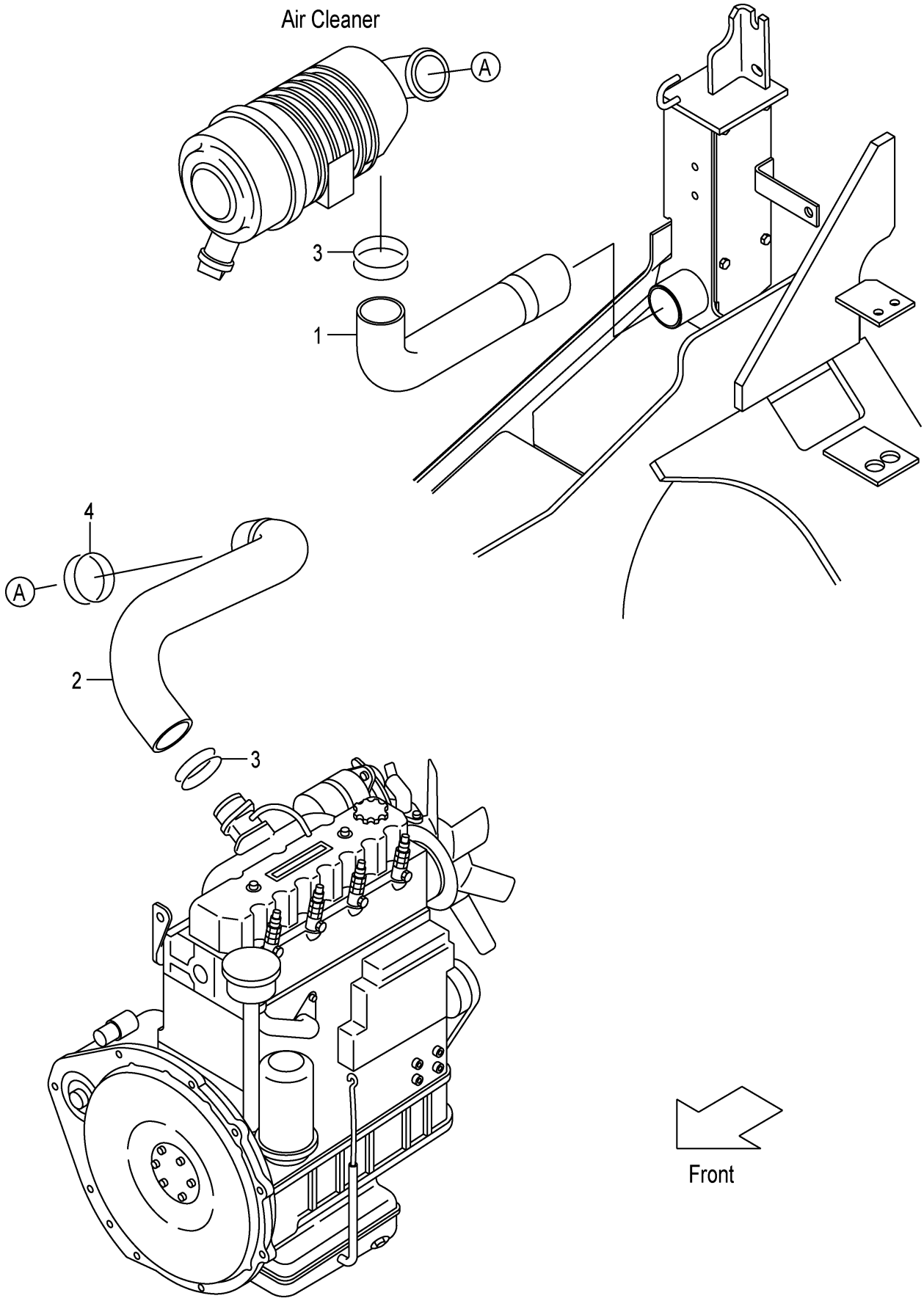

FIG.3

(F7Z11060)

A:FHD15C3Z FHD15T3Z FHD18C3Z FHD18T3Z

Item No	Part No.	Mark	Description		Req'd	Remarks : Serial No.
1	20L71-02111		HOSE,AIR-DUCT	ﾎｰｽ	1	
2	217M1-02001		HOSE,AIR-INTAKE	ﾎｰｽ	1	
3	04911-00060		CLIP	ｸﾘｯﾌﾟ	2	
4	04911-00065		CLIP	ｸﾘｯﾌﾟ	1	

FIG.4 AIR DUCT [CAKB]

(F7Z11080) エアーダクト

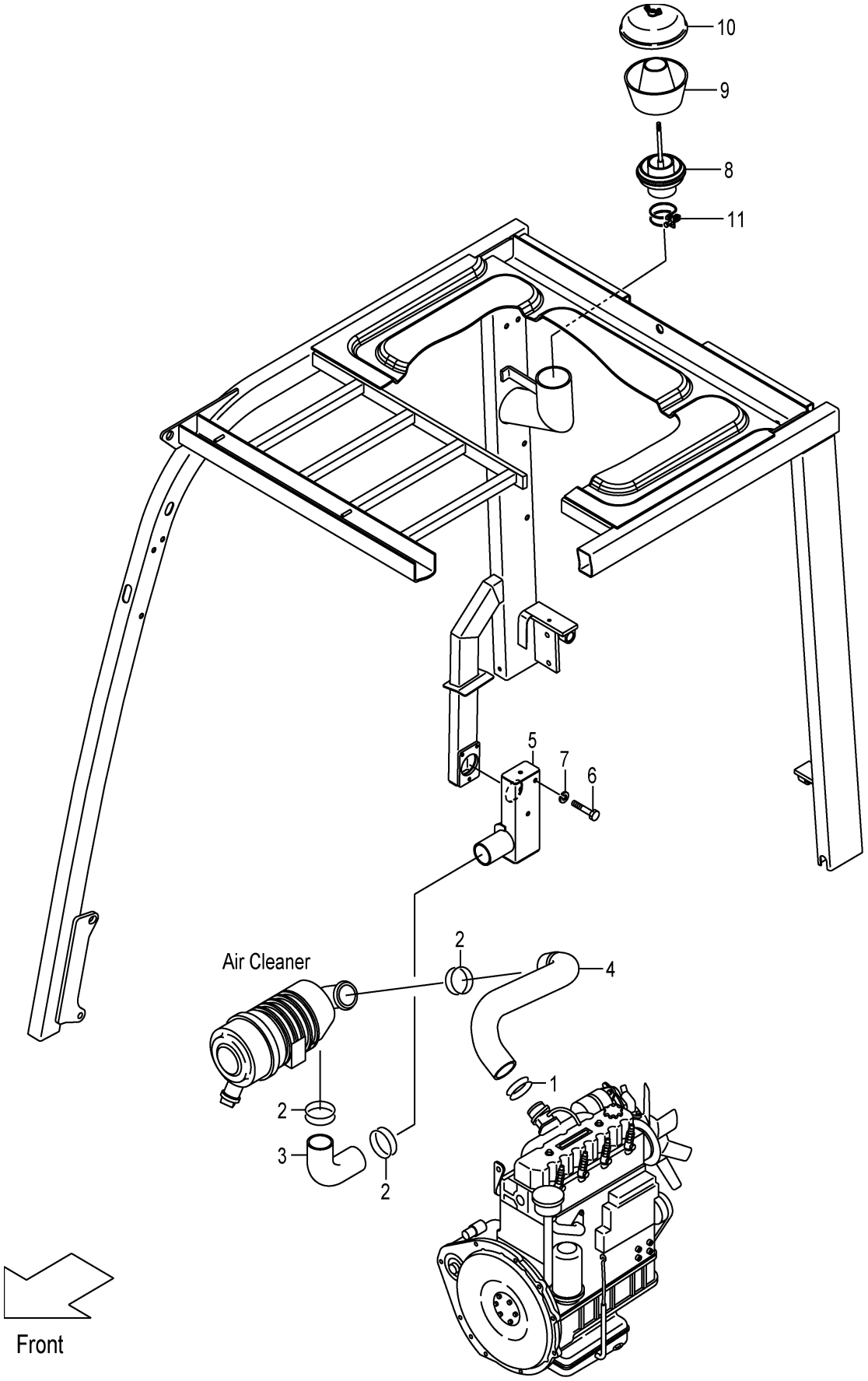

FIG.4

(F7Z11080)

A:FHD15C3Z FHD15T3Z FHD18C3Z FHD18T3Z

Item No	Part No.	Mark	Description		Req'd	Remarks : Serial No.
1	04911-00065		CLIP	ｸﾘｯﾌﾟ	1	[CAKB]
2	04911-00060		CLIP	ｸﾘｯﾌﾟ	3	[CAKB]
3	50A70-92251		HOSE,AIR-DUCT	ﾎｰｽ	1	[CAKB]
4	217M1-02001		HOSE,AIR-INTAKE	ﾎｰｽ	1	[CAKB]
5	50L70-90301		PIPE	ﾊﾟｲﾌﾟ	1	[CAKB]
6	01100-08050		BOLT	ﾎﾞﾙﾄ	3	[CAKB]
7	02000-00008		WASHER	ﾜｯｼｬ	3	[CAKB]
A1	522B0-92021		CLEANER-ASSY,PRE	ﾌﾟﾚｸﾘｰﾅｱｯｾﾝ	1	[CAKB] INC.8-11
8	522B0-92031		SLEEVE	ｽﾘｰﾌﾞ	1	[CAKB]
9	522B0-92041		BODY	ﾎﾞﾃﾞｨ	1	[CAKB]
10	522B0-92051		COVER	ｶﾊﾞｰ	1	[CAKB]
11	04911-00090		CLIP	ｸﾘｯﾌﾟ	1	[CAKB]

FIG.5 COOLING UNIT

(F7Z12120) クーリング゛ユニット

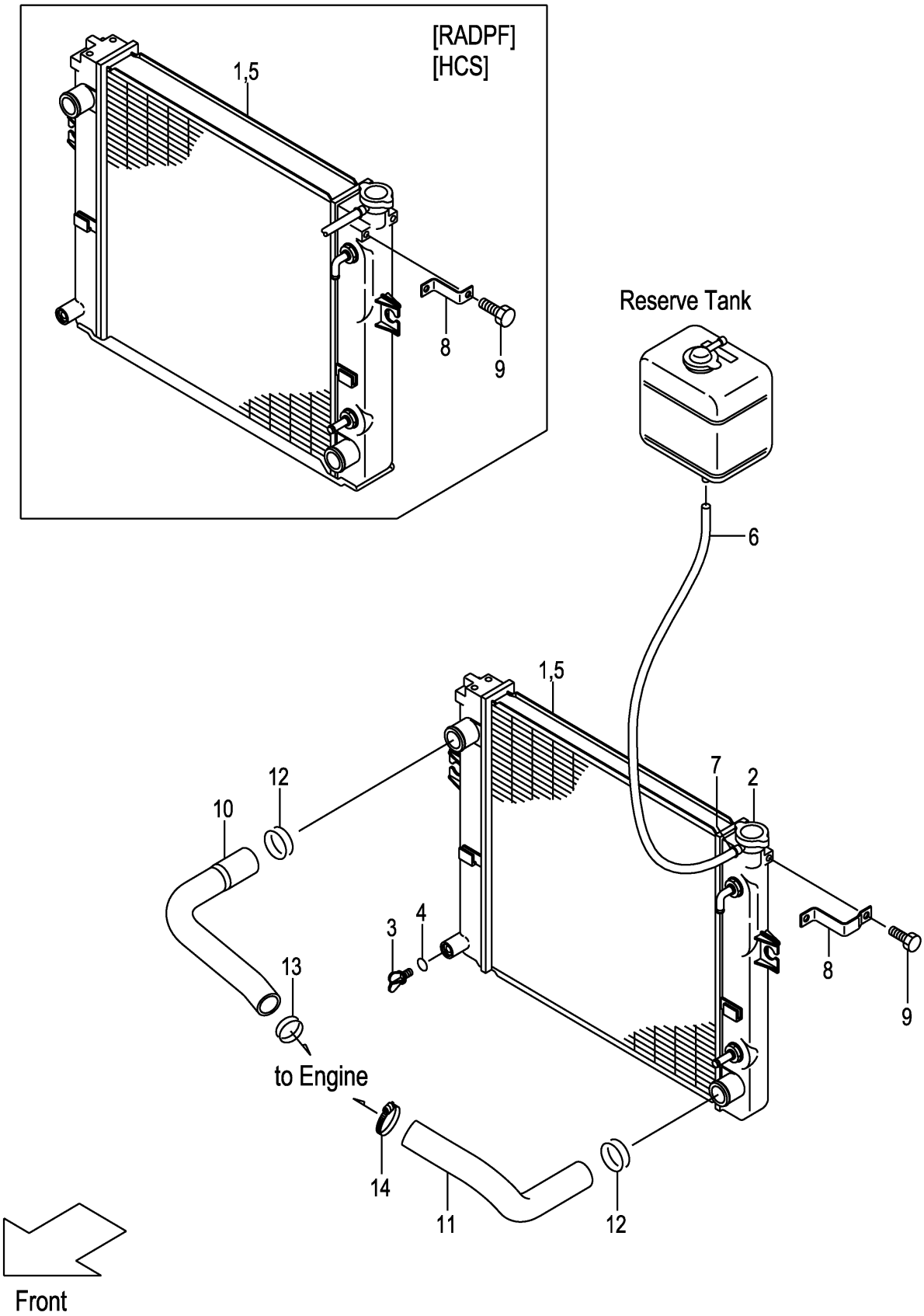

FIG.5

A:FHD15C3Z FHD18C3Z
B:FHD15T3Z FHD18T3Z

(F7Z12120)

Item No	Part No.	Mark	Description		Req'd	Remarks : Serial No.
A1	219M2-10102		RADIATOR-ASSY	ﾗｼﾞｴｰﾀｱｯｾﾝ	1	A INC.1-7
-	219N2-10102		RADIATOR-ASSY	ﾗｼﾞｴｰﾀｱｯｾﾝ	1	B INC.1-7
-	519M6-60302		RADIATOR-ASSY	ﾗｼﾞｴｰﾀｱｯｾﾝ	1	A [RADPF][HCS] INC.1-7
-	519N6-60302		RADIATOR-ASSY	ﾗｼﾞｴｰﾀｱｯｾﾝ	1	B [RADPF][HCS] INC.1-7
1	NO PART NO.	#	RADIATOR	ﾗｼﾞｴｰﾀ	1	A
-	NO PART NO.	#	RADIATOR	ﾗｼﾞｴｰﾀ	1	B
-	NO PART NO.	#	RADIATOR	ﾗｼﾞｴｰﾀ	1	A [RADPF][HCS]
-	NO PART NO.	#	RADIATOR	ﾗｼﾞｴｰﾀ	1	B [RADPF][HCS]
2	222A2-10211		CAP	ｷｬｯﾌﾟ	1	
3	234A2-12201		COCK	ｺｯｸ	1	
4	234A2-12211		O-RING	Oﾘﾝｸﾞ	1	
5	NO PART NO.	#	NUT	ﾅｯﾄ	3	
-	NO PART NO.	#	NUT	ﾅｯﾄ	4	[RADPF][HCS]
6	219M2-12301		HOSE	ﾎｰｽ	1	
7	23772-12071		CLIP	ｸﾘｯﾌﾟ	1	
8	239A2-12141		BRACKET	ﾌﾞﾗｹｯﾄ	1	
-	239B2-12141		BRACKET	ﾌﾞﾗｹｯﾄ	1	[RADPF][HCS]
9	01185-08016		BOLT	ﾎﾞﾙﾄ	1	
10	20L72-12001		HOSE,UPPER	ﾎｰｽ	1	
11	20L72-12011		HOSE,LOWER	ﾎｰｽ	1	
12	04911-00044		CLIP	ｸﾘｯﾌﾟ	2	
13	04911-00040		CLIP	ｸﾘｯﾌﾟ	1	
14	217M2-12221		CLAMP,HOSE	ｸﾗﾝﾌﾟ	1	

FIG.6 FAN SHROUD

(F7Z12140) ﾌｧﾝｼｭﾗｳﾄﾞ

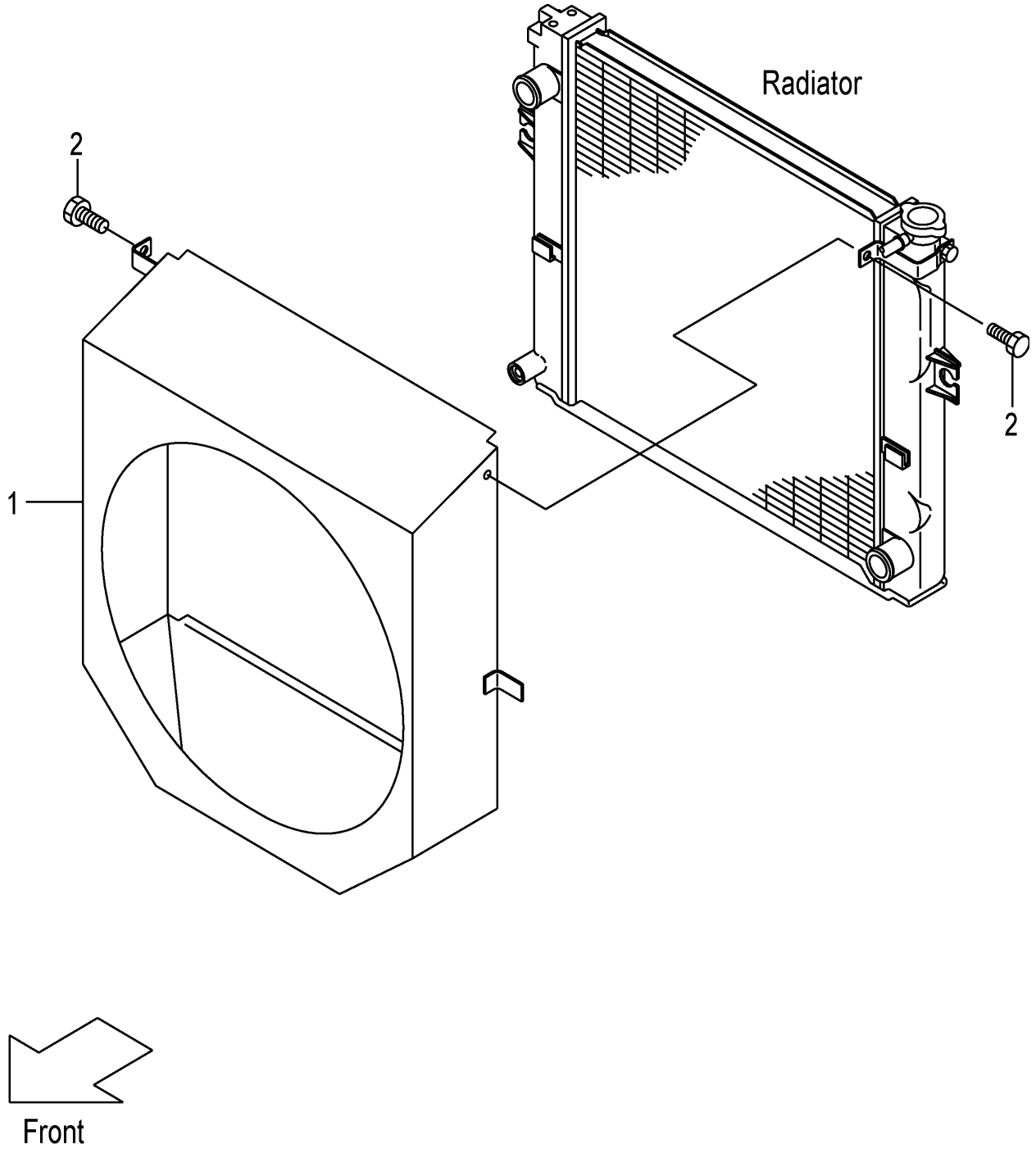

FIG.6

(F7Z12140)

A:FHD15C3Z FHD15T3Z FHD18C3Z FHD18T3Z

Item No	Part No.	Mark	Description	Req'd	Remarks : Serial No.
1	20L72-12201		SHROUD,FAN ｼｪﾗｳﾄﾞ	1	
2	01185-08016		BOLT ﾎﾞﾙﾄ	2	

FIG.7 RADIATOR PARTS & RESERVE TANK

(F7Z12150) ﾗｼﾞｴｰﾀﾊﾟｰﾂ&ﾘｻﾞｰﾌﾞﾀﾝｸ

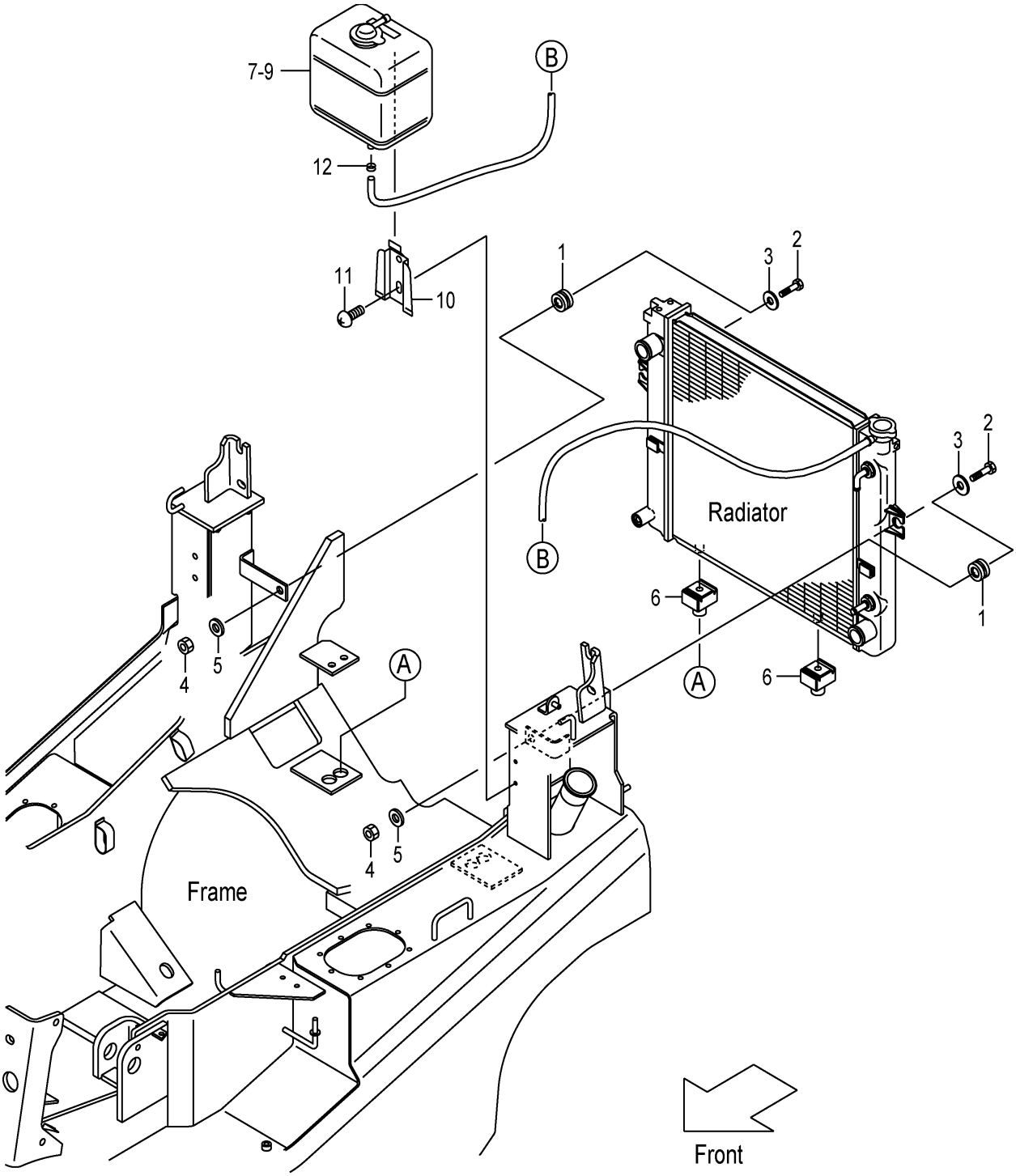

FIG.7

(F7Z12150)

A:FHD15C3Z FHD15T3Z FHD18C3Z FHD18T3Z

Item No	Part No.	Mark	Description		Req'd	Remarks : Serial No.
1	214A2-12001		RUBBER	ﾗﾊﾞｰ	2	
2	214A2-12021		BOLT	ﾎﾞﾙﾄ	2	
3	22252-32251		WASHER	ﾜｯｼｬ	2	
4	23652-12051		NUT	ﾅｯﾄ	2	
5	02000-00010		WASHER	ﾜｯｼｬ	2	
6	239A2-12021		RUBBER	ﾗﾊﾞｰ	2	
7	214A2-12111		TANK,RESERVE	ﾀﾝｸ	1	INC.8,9
-	214A2-12121		TANK,RESERVE	ﾀﾝｸ	1	[OKM] INC.8,9
8	214A2-13001		CAP	ｷｬｯﾌﾟ	1	
9	214A2-13011		PACKING	ﾊﾟｯｷﾝｸﾞ	1	
10	214A2-12141		BRACKET	ﾌﾞﾗｹｯﾄ	1	
11	214A2-42611		SCREW	ｽｸﾘｭ	2	
12	214A2-12201		CLIP	ｸﾘｯﾌﾟ	1	

FIG.8 FUEL SYSTEM

(F7Z12220) フューエルシステム

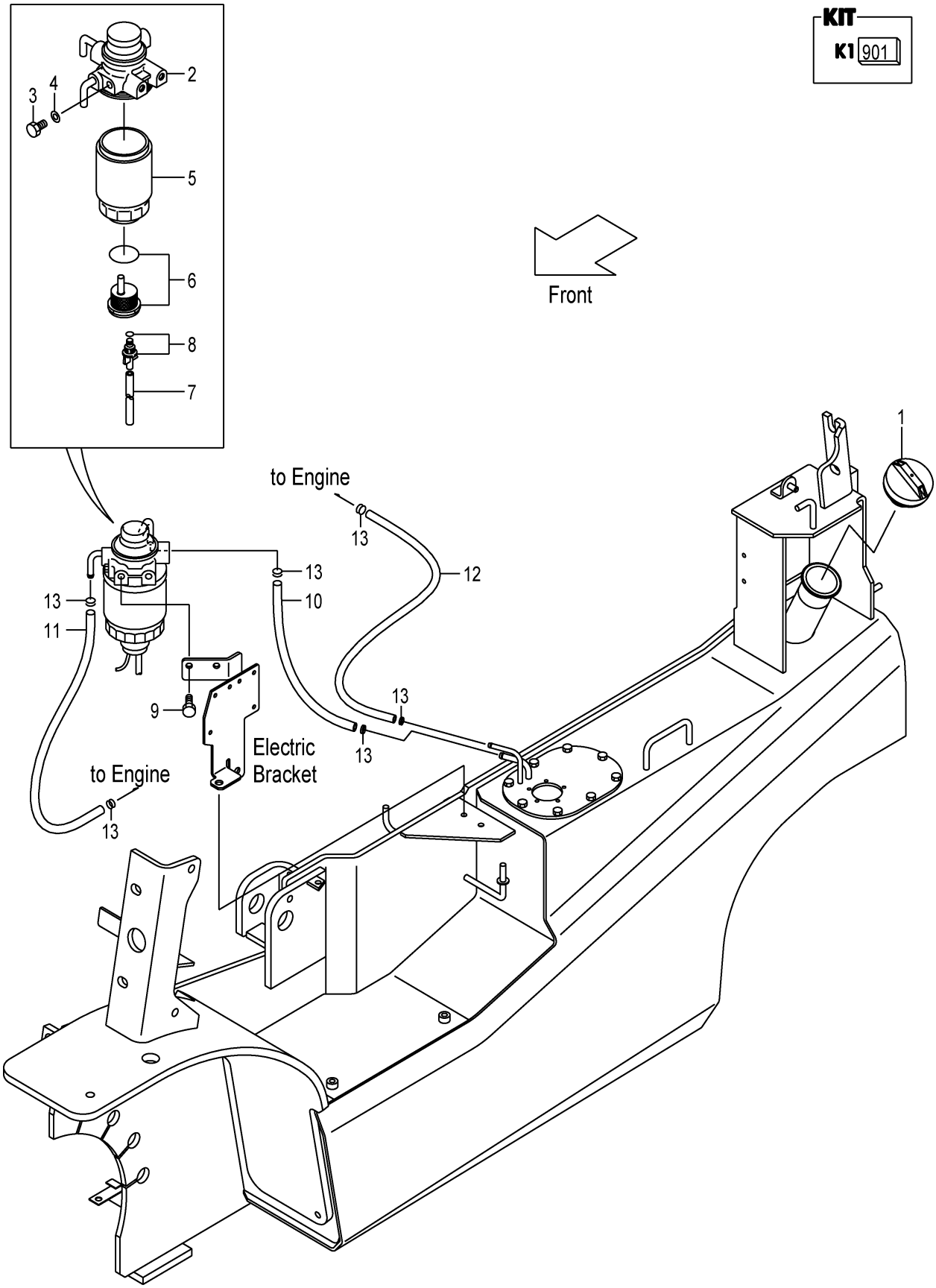

FIG.8

(F7Z12220)

A:FHD15C3Z FHD15T3Z FHD18C3Z FHD18T3Z

Item No	Part No.	Mark	Description		Req'd	Remarks : Serial No.
1	216G2-22051		CAP,FUEL	ｷｬｯﾌﾟ	1	
A1	24662-22032		FILTER-ASSY,FUEL	ﾌｭｰｴﾙﾌｨﾙﾀｱｯｾﾝ	1	INC.2-8
901	Z-8-94367-294-0	K1	KIT,SENSOR	ｾﾝｻｷｯﾄ	1	INC.6-8
2	NO PART NO.	#	BODY	ﾎﾞﾃﾞｨ	1	
3	Z-8-94132-674-0		PLUG	ﾌﾟﾗｸﾞ	1	
4	Z-8-94132-675-0		GASKET	ｶﾞｽｹｯﾄ	1	
5	20801-02141		CARTRIDGE	ｶｰﾄﾘｯｼﾞ	1	
6	NO PART NO.	#*	SENSOR	ｾﾝｻ	1	
7	Z-8-94367-956-0	*	HOSE	ﾎｰｽ	1	
8	Z-8-94367-957-0	*	PLUG	ﾌﾟﾗｸﾞ	1	
9	01183-08016		BOLT	ﾎﾞﾙﾄ	2	
10	24662-22141		HOSE,FUEL	ﾎｰｽ	1	
11	214A2-22081		HOSE,FUEL	ﾎｰｽ	1	
12	250A2-22001		HOSE,FUEL	ﾎｰｽ	1	
13	22192-22091		CLIP	ｸﾘｯﾌﾟ	6	

FIG.9 EXHAUST SYSTEM

(F7Z12310) エキゾーストシステム

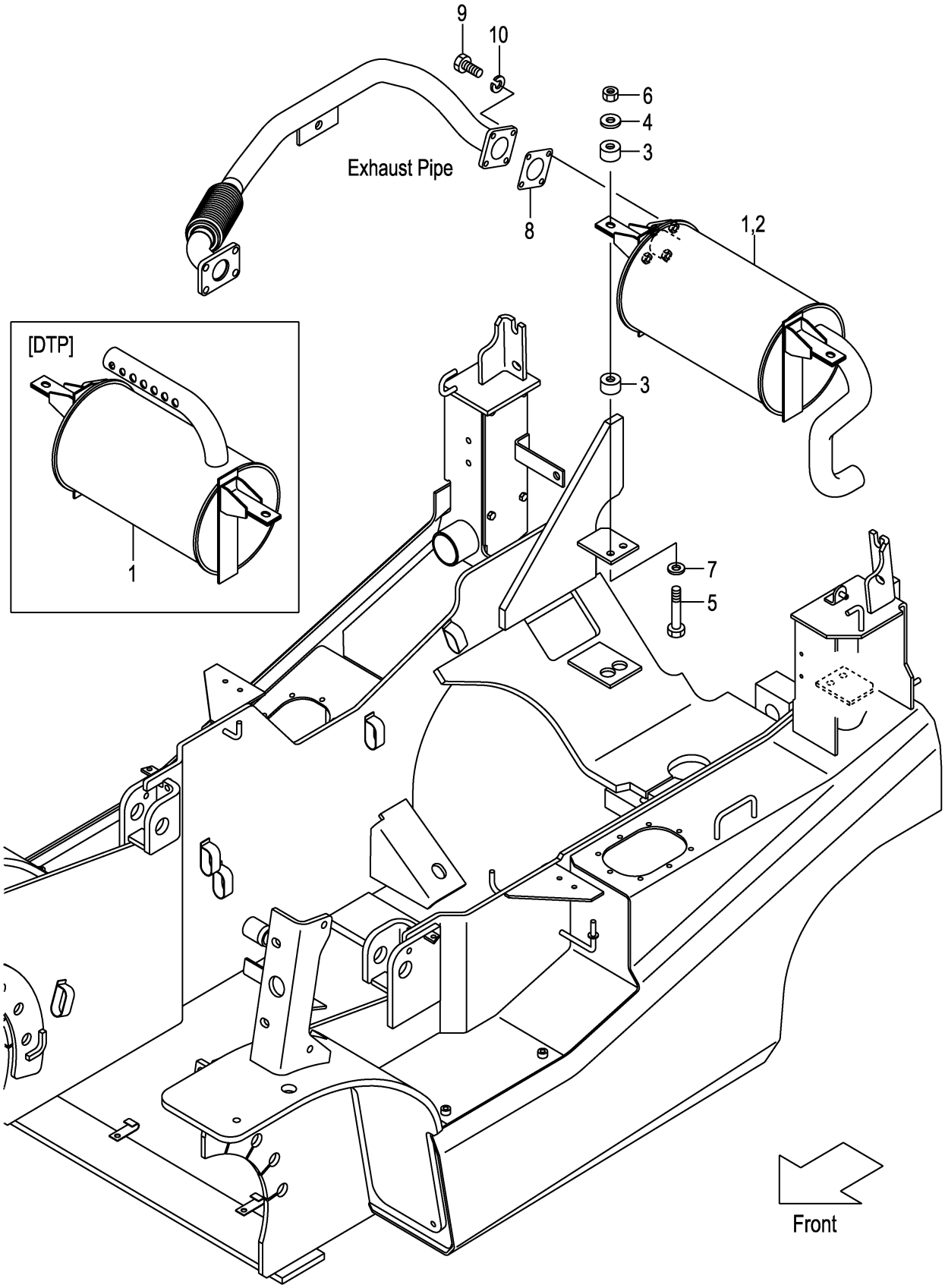

FIG.9

(F7Z12310)

A:FHD15C3Z FHD15T3Z FHD18C3Z FHD18T3Z

Item No	Part No.	Mark	Description		Req'd	Remarks : Serial No.
1	20A72-30101		MUFFLER	ﾏﾌﾗ	1	
-	50J71-70101		MUFFLER	ﾏﾌﾗ	1	[EPM] INC.2
-	50A71-70201		MUFFLER	ﾏﾌﾗ	1	[CBM]
-	50A71-70301		MUFFLER	ﾏﾌﾗ	1	[DTP]
2	532A1-70201		CATALYST	ｷｬﾀﾘｽﾄ	1	[EPM]
3	22252-32241		RUBBER,CUSHION	ﾗﾊﾞｰ	4	
4	22252-32251		WASHER	ﾜｯｼｬ	2	
5	21232-32551		BOLT	ﾎﾞﾙﾄ	2	
6	23652-12051		NUT	ﾅｯﾄ	2	
7	02000-00010		WASHER	ﾜｯｼｬ	2	
8	217G2-32001		GASKET	ｶﾞｽｹｯﾄ	1	
9	01100-08030		BOLT	ﾎﾞﾙﾄ	4	
10	02010-00008		WASHER	ﾜｯｼｬ	4	

FIG.10 EXHAUST SYSTEM [TUE]

(F7Z12330) エキゾーストシステム

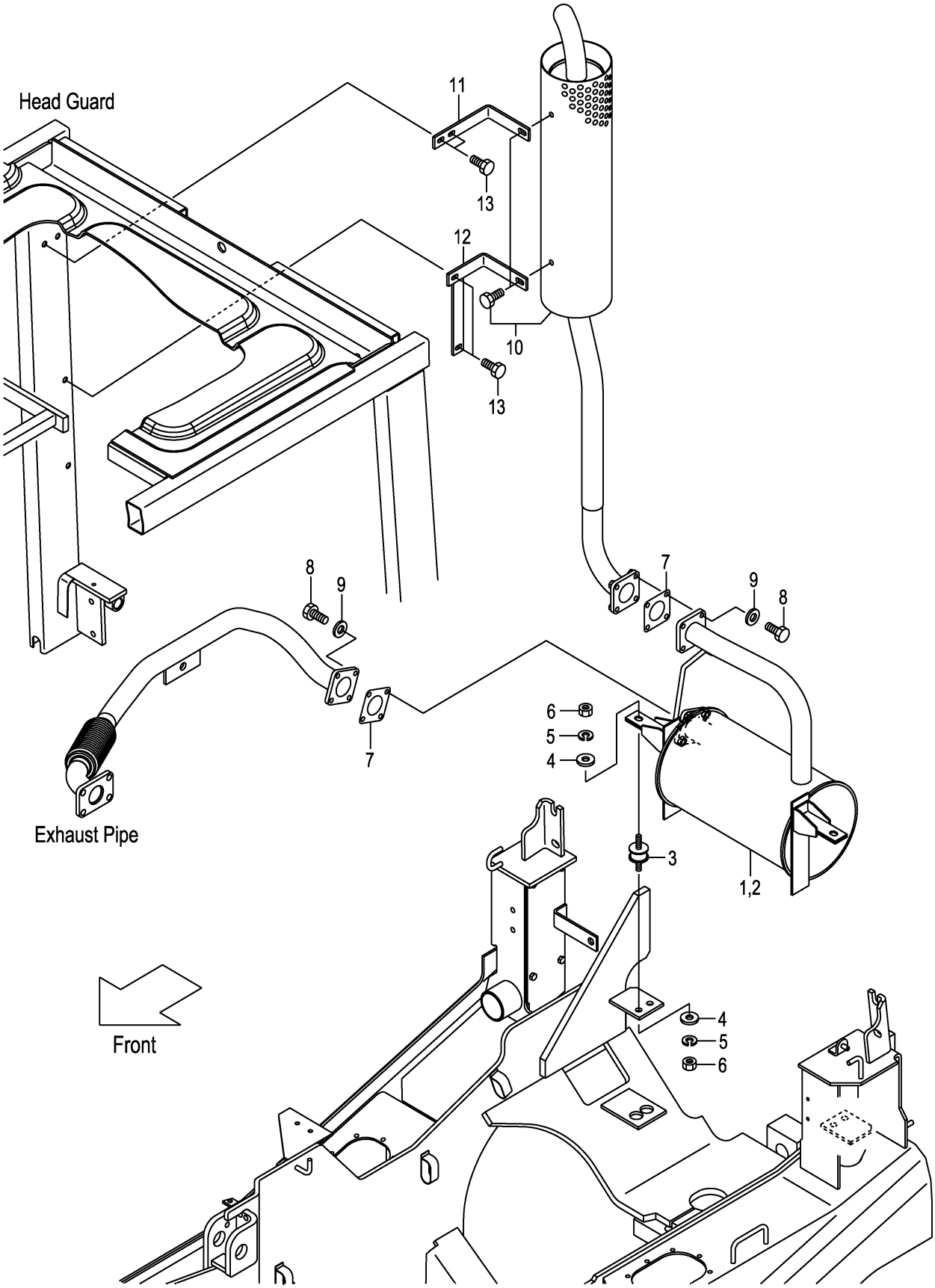

FIG.10

(F7Z12330)

A:FHD15C3Z FHD15T3Z FHD18C3Z FHD18T3Z

Item No	Part No.	Mark	Description		Req'd	Remarks : Serial No.
1	50A70-80201		MUFFLER	ﾏﾌﾗ	1	[TUE]
-	50H70-80211		MUFFLER	ﾏﾌﾗ	1	[EPM/TUE] INC.2
-	50H70-80221		MUFFLER	ﾏﾌﾗ	1	[CBM/TUE]
2	532A1-70201		CATALYST	ｷｬﾀﾘｽﾄ	1	[EPM/TUE]
3	539A0-82201		RUBBER	ﾗﾊﾞｰ	2	[TUE]
4	124T3-43041		PLATE	ﾌﾟﾚｰﾄ	4	[TUE]
5	02010-00008		WASHER	ﾜｯｼｬ	4	[TUE]
6	01400-00008		NUT	ﾅｯﾄ	4	[TUE]
7	217G2-32001		GASKET	ｶﾞｽｹｯﾄ	2	[TUE]
8	01182-08025		BOLT	ﾎﾞﾙﾄ	8	[TUE]
9	02000-00008		WASHER	ﾜｯｼｬ	8	[TUE]
10	50A70-80301		MUFFLER,VERTICAL	ﾏﾌﾗ	1	[TUE]
11	50A70-82501		BRACKET	ﾌﾞﾗｹｯﾄ	1	[TUE]
12	50A70-82511		BRACKET	ﾌﾞﾗｹｯﾄ	1	[TUE]
13	01185-08020		BOLT	ﾎﾞﾙﾄ	4	[TUE]

FIG.11 FRONT TUBE & JOINT

(F7Z12380) フロントチューブ&ジョイント

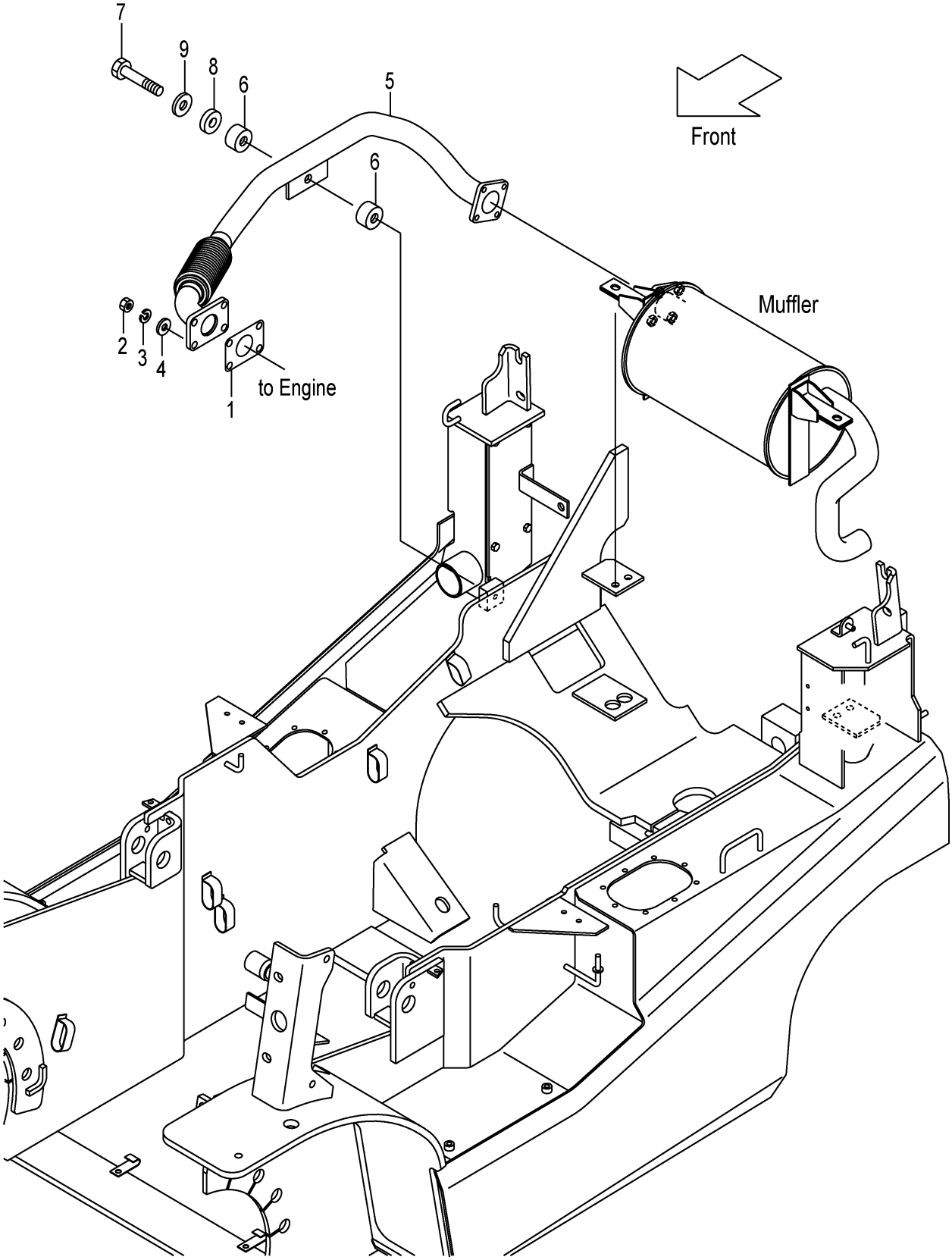

FIG.11

(F7Z12380)

A:FHD15C3Z FHD15T3Z FHD18C3Z FHD18T3Z

Item No	Part No.	Mark	Description		Req'd	Remarks : Serial No.
1	224G2-32011		GASKET	ｶﾞｽｹｯﾄ	1	
2	01400-20010		NUT	ﾅｯﾄ	4	
3	02010-00010		WASHER	ﾜｯｼｬ	4	
4	02000-00010		WASHER	ﾜｯｼｬ	4	
5	20L72-30111		PIPE,EXHAUST	ﾊﾟｲﾌﾟ	1	
6	22252-32241		RUBBER,CUSHION	ﾗﾊﾞｰ	2	
7	21232-32551		BOLT	ﾎﾞﾙﾄ	1	
8	23451-02011		WASHER	ﾜｯｼｬ	1	
9	22252-32251		WASHER	ﾜｯｼｬ	1	

FIG.12 COMBINATION METER

(F7Z12410) コンビネーションメータ

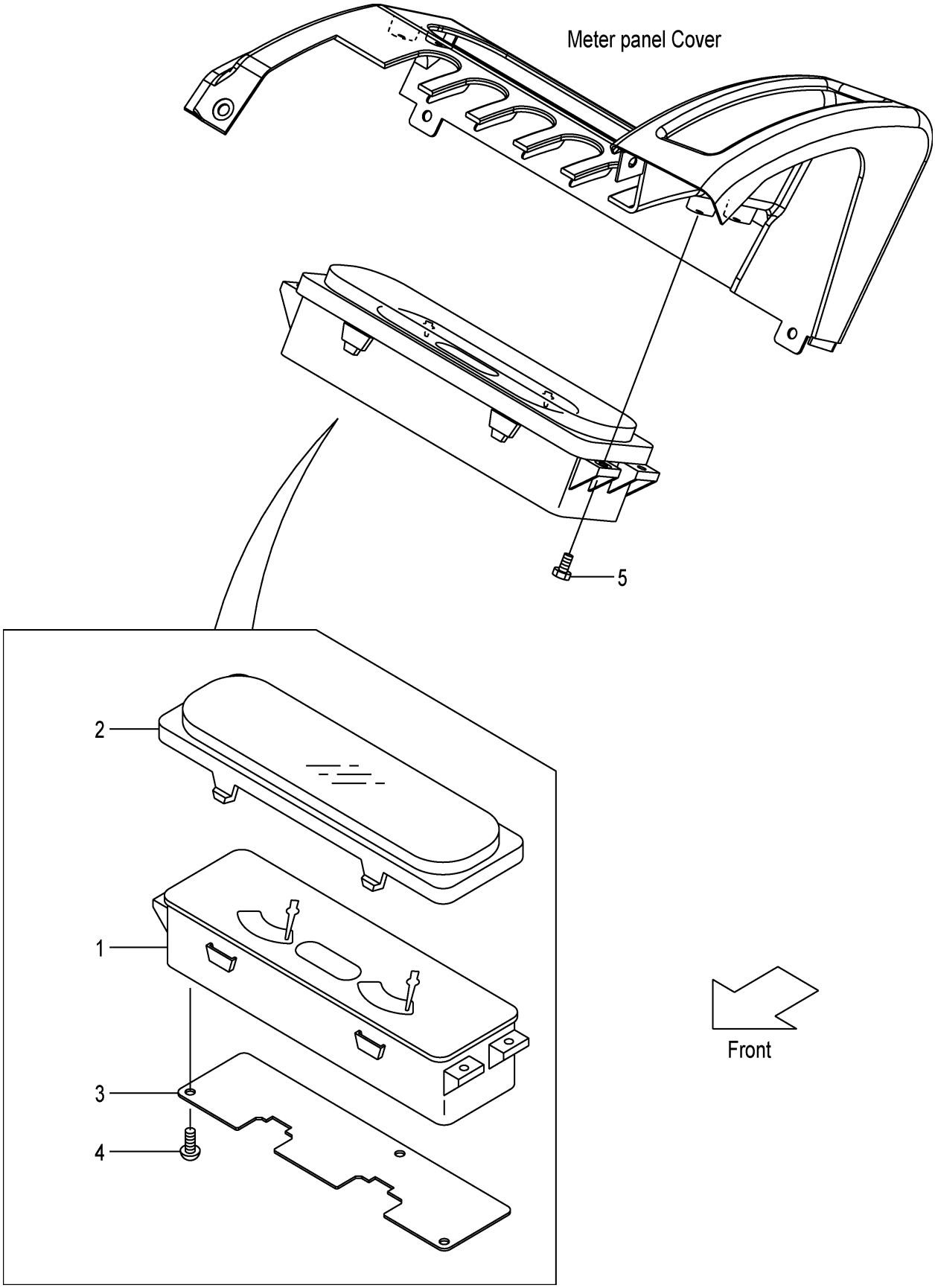

FIG.12

(F7Z12410)

A:FHD15C3Z FHD15T3Z FHD18C3Z FHD18T3Z

Item No	Part No.	Mark	Description	Req'd	Remarks : Serial No.
A1	22N52-40301		METER-ASSY,COMBINATION ｺﾝﾋﾞﾈｰｼｮﾝﾒｰﾀｱｯｾﾝ	1	INC.1-4
-	52N56-20101		METER-ASSY,COMBINATION ｺﾝﾋﾞﾈｰｼｮﾝﾒｰﾀｱｯｾﾝ	1	[OKM][SIL] INC.1-4
1	NO PART NO.	#	METER,COMBINATION ﾒｰﾀ	1	
-	NO PART NO.	#	METER,COMBINATION ﾒｰﾀ	1	[OKM][SIL]
2	22N52-42501		COVER ｶﾊﾞｰ	1	
3	22N52-42511		PLATE ﾌﾟﾚｰﾄ	1	
4	01043-03010		SCREW ｽｸﾘｭ	3	
5	01185-04012		BOLT ﾎﾞﾙﾄ	4	

FIG.13 FRONT GUARD WIRE HARNESS (CLUTCH)

(F7Z12420) ﾌﾛﾝﾄｶﾞｰﾄﾞﾜｲﾔﾊｰﾈｽ

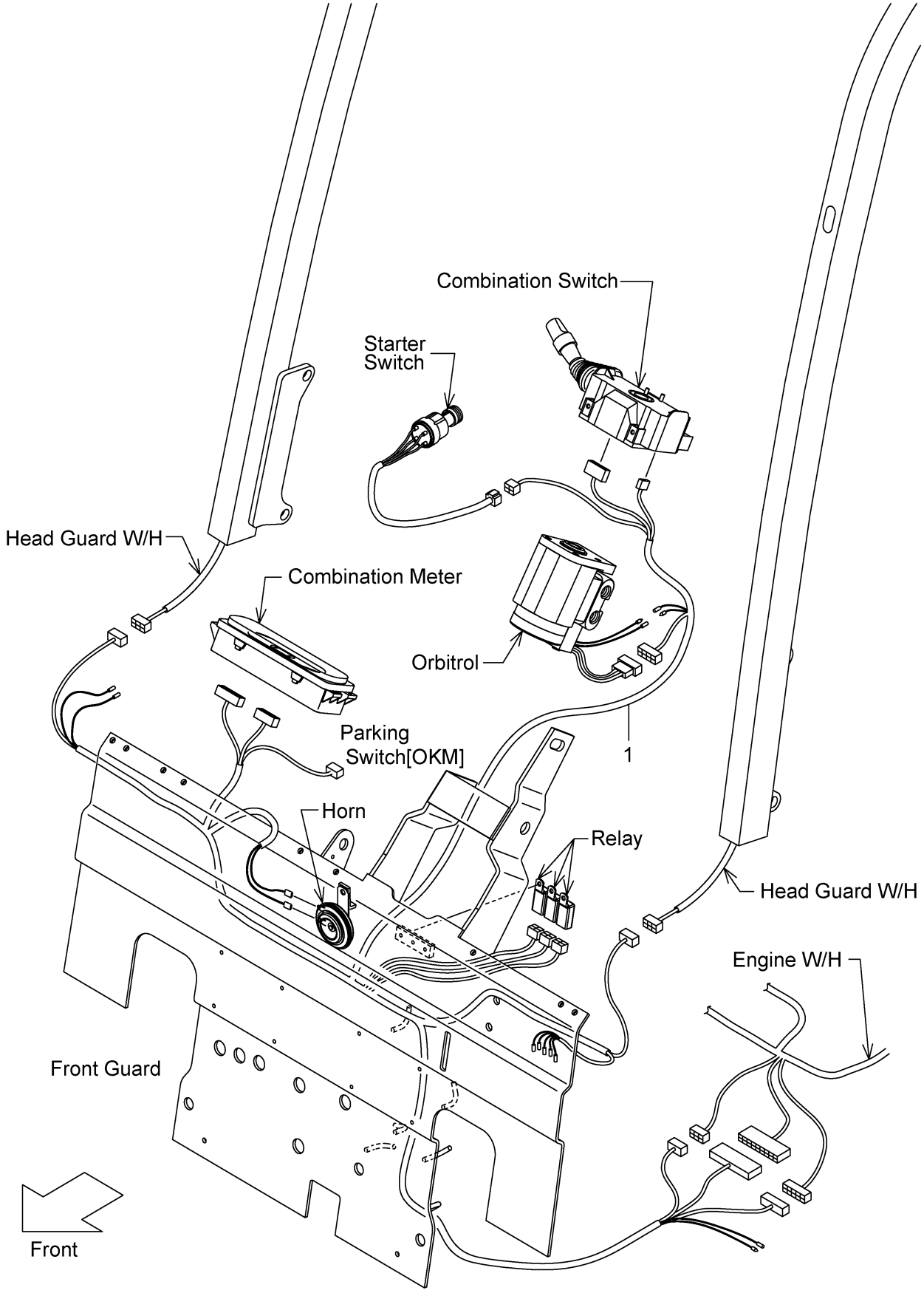

FIG.13

(F7Z12420)

A:FHD15C3Z FHD18C3Z

Item No	Part No.	Mark	Description	Req'd	Remarks : Serial No.
1	22N42-42201		WIRE-HARNESS,F.GUARD ﾜｲﾔﾊｰﾈｽ	1	
-	52N43-72101		WIRE-HARNESS,F.GUARD ﾜｲﾔﾊｰﾈｽ	1	[FC]

FIG.14 FRONT GUARD WIRE HARNESS (TOR-CON)

(F7Z12430) ﾌﾛﾝﾄｶﾞｰﾄﾞﾜｲﾔﾊｰﾈｽ

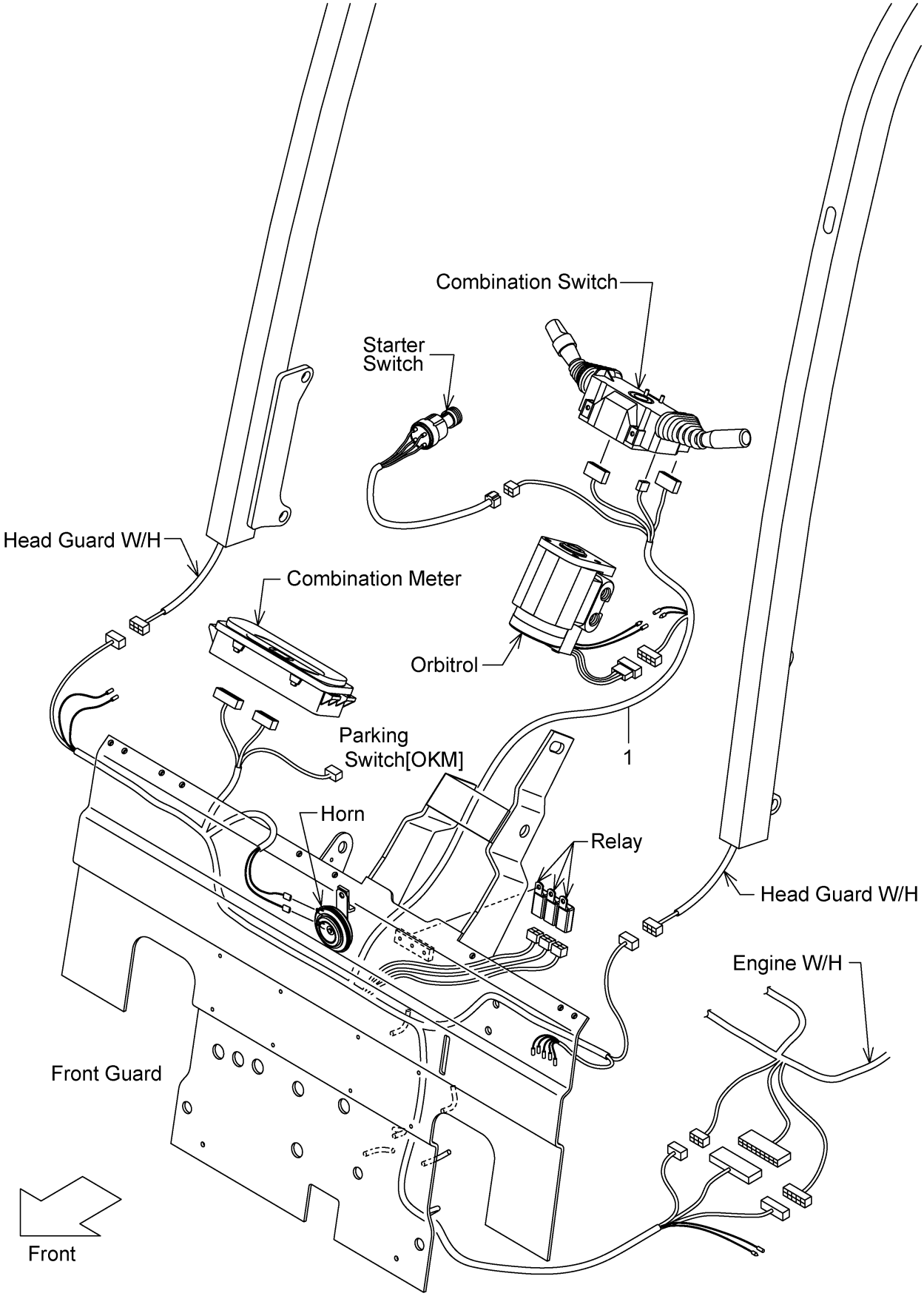

FIG.14

(F7Z12430)

A:FHD15T3Z FHD18T3Z

Item No	Part No.	Mark	Description	Req'd	Remarks : Serial No.
1	22N52-42201		WIRE-HARNESS,F.GUARD ﾜｲﾔﾊｰﾈｽ	1	
-	52N52-32001		WIRE-HARNESS,F.GUARD ﾜｲﾔﾊｰﾈｽ	1	[LCR]
-	52N53-72101		WIRE-HARNESS,F.GUARD ﾜｲﾔﾊｰﾈｽ	1	[FC]
-	52N53-72301		WIRE-HARNESS,F.GUARD ﾜｲﾔﾊｰﾈｽ	1	[FC/LCR]

FIG.15 COMBINATION SWITCH (CLUTCH)

(F7Z12440) コンビネーションスイッチ

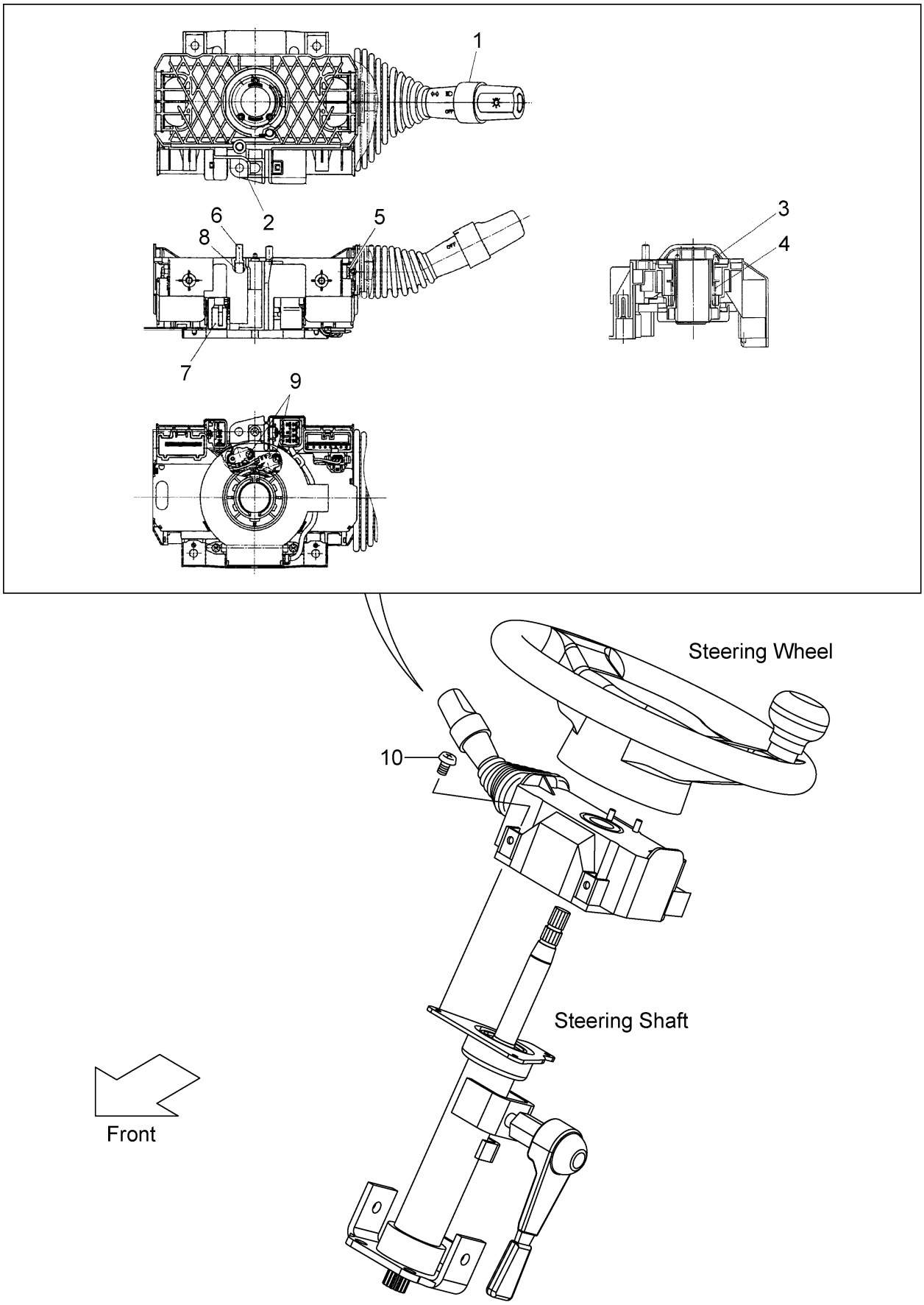

FIG.15

(F7Z12440)

A:FHD15C3Z FHD18C3Z

Item No	Part No.	Mark	Description		Req'd	Remarks : Serial No.
A1	239A2-40501		SWITCH-ASSY,COMBINATION		1	INC.1-9
				ｺﾝﾋﾞﾈｰｼｮﾝｽｲｯﾁｱｯｾﾝ		
1	280C2-42331		SWITCH,TURN-SIGNAL	ｽｲｯﾁ	1	
2	NO PART NO.	#	BODY	ﾎﾞﾃﾞｨ	1	
3	NO PART NO.	#	CAM,CANCEL,RH	ｶﾑ	1	
4	NO PART NO.	#	SPRING	ｽﾌﾟﾘﾝｸﾞ	1	
5	NO PART NO.	#	SCREW	ｽｸﾘｭ	4	
6	280C2-42351		CONTACT,HORN	ｺﾈｸﾀ	2	
7	NO PART NO.	#	CODE,CP-HORN	ｺｰﾄﾞ	1	
8	NO PART NO.	#	SPRING	ｽﾌﾟﾘﾝｸﾞ	2	
9	NO PART NO.	#	SCREW	ｽｸﾘｭ	2	
10	01033-05014		SCREW	ｽｸﾘｭ	3	

FIG.16 COMBINATION SWITCH (TOR-CON)

(F7Z12450) コンビネーションスイッチ

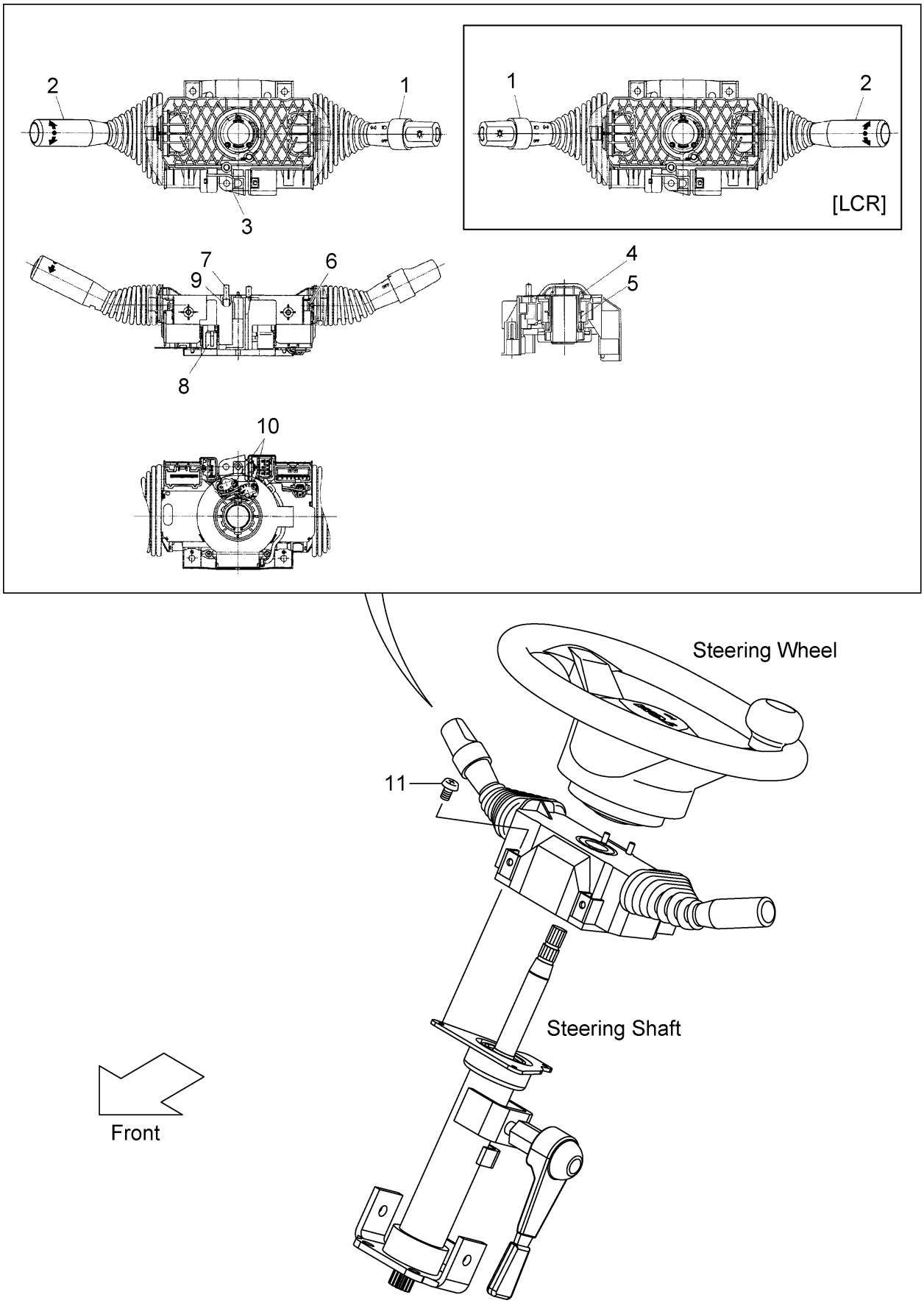

FIG.16

(F7Z12450)

A:FHD15T3Z FHD18T3Z

Item No	Part No.	Mark	Description	Req'd	Remarks : Serial No.
A1	209K2-40501		SWITCH-ASSY,COMBINATION ｺﾝﾋﾞﾈｰｼｮﾝｽｲｯﾁｱｯｾﾝ	1	INC.1-10
-	509K2-30101		SWITCH-ASSY,COMBINATION ｺﾝﾋﾞﾈｰｼｮﾝｽｲｯﾁｱｯｾﾝ	1	[LCR] INC.1-10
1	280C2-42331		SWITCH,TURN-SIGNAL ｽｲｯﾁ	1	
-	280C2-42301		SWITCH,TURN-SIGNAL ｽｲｯﾁ	1	[LCR]
2	280C2-42341		SWITCH,DIRECTION ｽｲｯﾁ	1	
-	280C2-42311		SWITCH,DIRECTION ｽｲｯﾁ	1	[LCR]
3	NO PART NO.	#	BODY ﾎﾞﾃﾞｨ	1	
4	NO PART NO.	#	CAM,CANCEL,RH ｶﾑ	1	
-	NO PART NO.	#	CAM,CANCEL,RH ｶﾑ	1	[LCR]
5	NO PART NO.	#	SPRING ｽﾌﾟﾘﾝｸﾞ	1	
6	NO PART NO.	#	SCREW ｽｸﾘｭ	4	
7	280C2-42351		CONTACT,HORN ｺﾈｸﾀ	2	
8	NO PART NO.	#	CODE,CP-HORN ｺｰﾄﾞ	1	
9	NO PART NO.	#	SPRING ｽﾌﾟﾘﾝｸﾞ	2	
10	NO PART NO.	#	SCREW ｽｸﾘｭ	2	
11	01033-05014		SCREW ｽｸﾘｭ	3	

FIG.17 ELECTRIC PARTS (CLUTCH)

(F7Z12480) エレクトリックパーツ

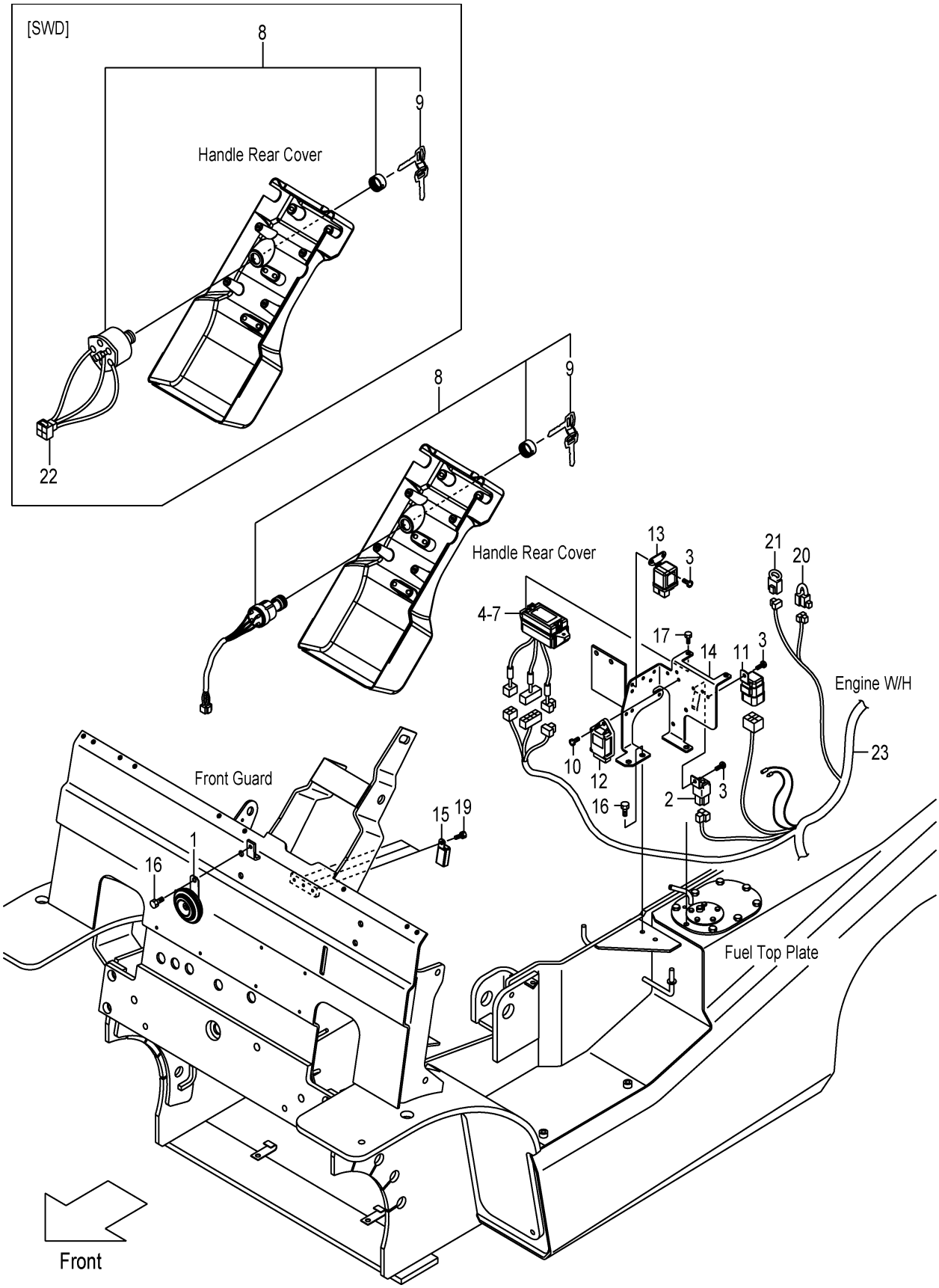

A:FHD15C3Z FHD18C3Z

Item No	Part No.	Mark	Description		Req'd	Remarks : Serial No.
1	216G2-43651		HORN	ﾎｰﾝ	1	
2	216G2-43711		UNIT,FLASHER	ﾌﾗｯｼｬﾕﾆｯﾄ	1	
3	214A2-42611		SCREW	ｽｸﾘｭ	4	
4	22N52-42102		BOX,FUSE	ﾎﾞｯｸｽ	1	INC.5-7
5	22N52-42311		FUSE,3A	ﾋｭｰｽﾞ	4	
6	22N52-42321		FUSE,7.5A	ﾋｭｰｽﾞ	6	
7	22N52-42331		FUSE,15A	ﾋｭｰｽﾞ	3	
8	216G2-42311		SWITCH,STARTER	ｽｲｯﾁ	1	INC.9
-	24352-42521		SWITCH,STARTER	ｽｲｯﾁ	1	[SWD] INC.9
9	216G2-43401		KEY,SPARE,511323	ｷｰ	1	(1SET=2PCS)
-	216G2-43411		KEY,SPARE,512421	ｷｰ	(1)	(1SET=2PCS)
-	216G2-43421		KEY,SPARE,513454	ｷｰ	(1)	(1SET=2PCS)
-	93956-59279		KEY,SPARE,511323	ｷｰ	1	[SWD](1SET=2PCS)
10	214A2-42621		SCREW	ｽｸﾘｭ	1	
11	217G2-42301		RELAY,STARTER	ﾘﾚｰ	1	
-	216G2-42321		RELAY,STARTER	ﾘﾚｰ	1	[SWD]
12	21152-42013		TIMER,QOS-CONTROLLER	ﾀｲﾏ	1	
13	21152-42021		RELAY,GLOW-PLUG	ﾘﾚｰ	1	
14	20L72-40201		BRACKET,ELECTRIC	ﾌﾞﾗｹｯﾄ	1	
15	209K2-42351		RELAY,1A	ﾘﾚｰ	3	
16	01185-08016		BOLT	ﾎﾞﾙﾄ	3	
17	01183-06016		BOLT	ﾎﾞﾙﾄ	2	
18	04913-10200	+	BAND	ﾊﾞﾝﾄﾞ	4	
19	01183-06010		BOLT	ﾎﾞﾙﾄ	3	
20	22N52-43001		RESISTOR	ﾚｼﾞｽﾀ	1	
21	21152-42091		DIODE	ﾀﾞｲｵｰﾄﾞ	1	
22	534A7-72001		WIRE,LEAD	ﾜｲﾔ	1	[SWD]
23	22U42-42211		WIRE-HARNESS,ENGINE	ﾜｲﾔﾊｰﾈｽ	1	
-	52U43-72001		WIRE-HARNESS,ENGINE	ﾜｲﾔﾊｰﾈｽ	1	[FC]
24	214A2-42331	+	CLIP	ｸﾘｯﾌﾟ	2	
25	01183-06016	+	BOLT	ﾎﾞﾙﾄ	1	
26	01183-08016	+	BOLT	ﾎﾞﾙﾄ	1	
27	23652-44001	+	UNIT,SENDING,WATER	ﾕﾆｯﾄ	1	
28	23232-42072	+	SWITCH,STOP-LAMP	ｽｲｯﾁ	1	
29	52N58-92401	+	WIRE,LEAD	ﾜｲﾔ	1	[FAN/HGH][RLY/HGH][RLR/HGH] [RWL/HGH]
-	52N58-92401	+	WIRE,LEAD	ﾜｲﾔ	1	[SASC/HGH][SASR/HGH]

FIG.18 ELECTRIC PARTS (TOR-CON)

(F7Z12490) エレクトリックパーツ

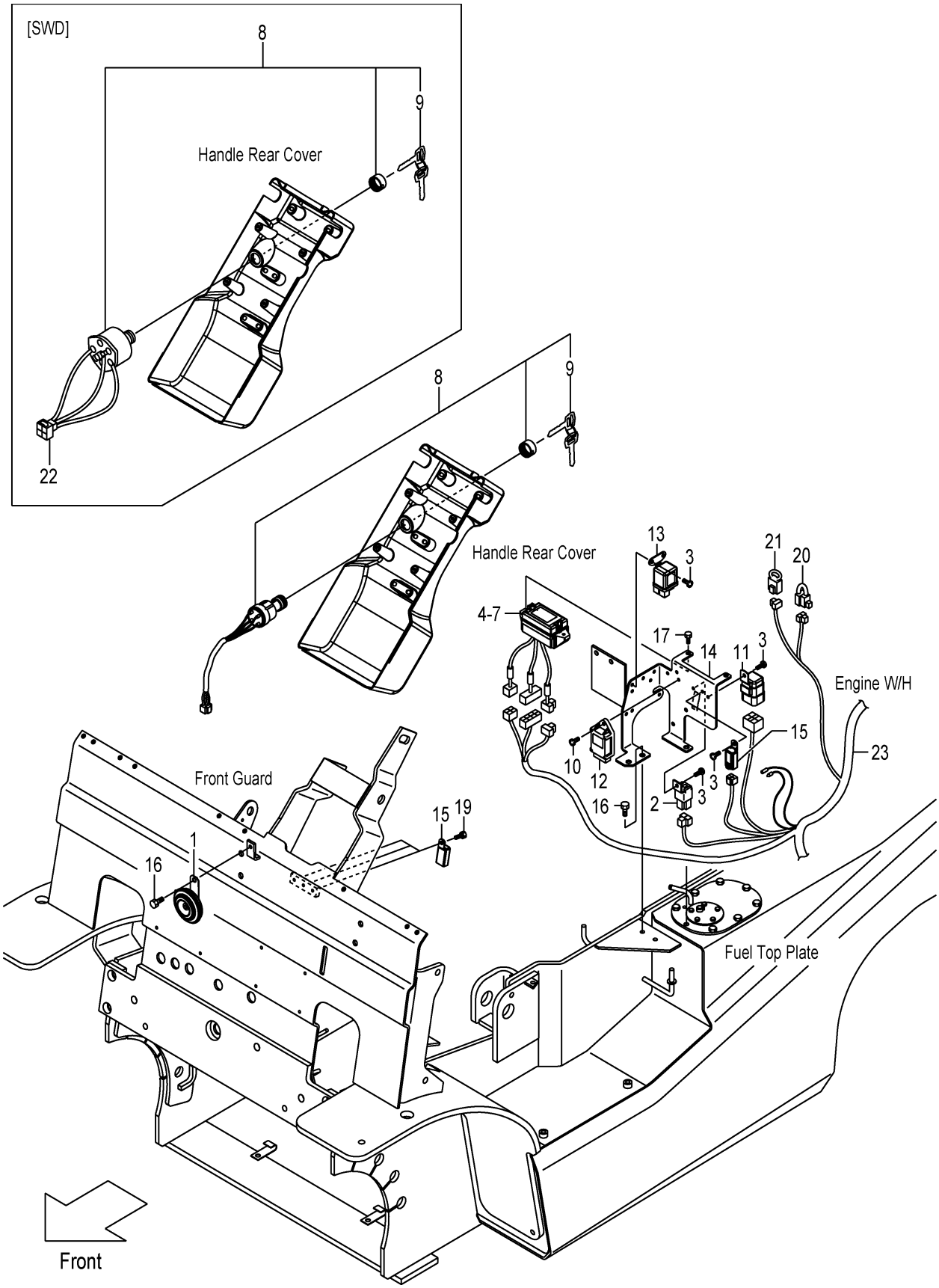

A:FHD15T3Z FHD18T3Z

Item No	Part No.	Mark	Description		Req'd	Remarks : Serial No.
1	216G2-43651		HORN	ﾎｰﾝ	1	
2	216G2-43711		UNIT,FLASHER	ﾌﾗｯｼｬﾕﾆｯﾄ	1	
3	214A2-42611		SCREW	ｽｸﾘｭ	5	
4	22N52-42102		BOX,FUSE	ﾎﾞｯｸｽ	1	INC.5-7
5	22N52-42311		FUSE,3A	ﾋｭｰｽﾞ	4	
6	22N52-42321		FUSE,7.5A	ﾋｭｰｽﾞ	6	
7	22N52-42331		FUSE,15A	ﾋｭｰｽﾞ	3	
8	216G2-42311		SWITCH,STARTER	ｽｲｯﾁ	1	INC.9
-	24352-42521		SWITCH,STARTER	ｽｲｯﾁ	1	[SWD] INC.9
9	216G2-43401		KEY,SPARE,511323	ｷｰ	1	(1SET=2PCS)
-	216G2-43411		KEY,SPARE,512421	ｷｰ	(1)	(1SET=2PCS)
-	216G2-43421		KEY,SPARE,513454	ｷｰ	(1)	(1SET=2PCS)
-	93956-59279		KEY,SPARE,511323	ｷｰ	1	[SWD](1SET=2PCS)
10	214A2-42621		SCREW	ｽｸﾘｭ	1	
11	217G2-42301		RELAY,STARTER	ﾘﾚｰ	1	
-	216G2-42321		RELAY,STARTER	ﾘﾚｰ	1	[SWD]
12	21152-42013		TIMER,QOS-CONTROLLER	ﾀｲﾏ	1	
13	21152-42021		RELAY,GLOW-PLUG	ﾘﾚｰ	1	
14	20L72-40201		BRACKET,ELECTRIC	ﾌﾞﾗｹｯﾄ	1	
15	209K2-42351		RELAY,1A	ﾘﾚｰ	4	
16	01185-08016		BOLT	ﾎﾞﾙﾄ	3	
17	01183-06016		BOLT	ﾎﾞﾙﾄ	2	
18	04913-10200	+	BAND	ﾊﾞﾝﾄﾞ	4	
19	01183-06010		BOLT	ﾎﾞﾙﾄ	3	
20	22N52-43001		RESISTOR	ﾚｼﾞｽﾀ	1	
21	21152-42091		DIODE	ﾀﾞｲｵｰﾄﾞ	1	
22	534A7-72001		WIRE,LEAD	ﾜｲﾔ	1	[SWD]
23	22U52-42211		WIRE-HARNESS,ENGINE	ﾜｲﾔﾊｰﾈｽ	1	
-	52U53-72001		WIRE-HARNESS,ENGINE	ﾜｲﾔﾊｰﾈｽ	1	[FC]
24	214A2-42331	+	CLIP	ｸﾘｯﾌﾟ	2	
25	01183-06016	+	BOLT	ﾎﾞﾙﾄ	1	
26	01183-08016	+	BOLT	ﾎﾞﾙﾄ	1	
27	23652-44001	+	UNIT,SENDING,WATER	ﾕﾆｯﾄ	1	
28	23232-42072	+	SWITCH,STOP-LAMP	ｽｲｯﾁ	1	
29	230C2-42201	+	DIODE,3A	ﾀﾞｲｵｰﾄﾞ	2	
30	52N58-92401	+	WIRE,LEAD	ﾜｲﾔ	1	[FAN/HGH][RLY/HGH][RLR/HGH] [RWL/HGH]
-	52N58-92401	+	WIRE,LEAD	ﾜｲﾔ	1	[SASC/HGH][SASR/HGH]

FIG.19 BATTERY

(F7Z124F0) ﾊﾞｯﾃﾘ

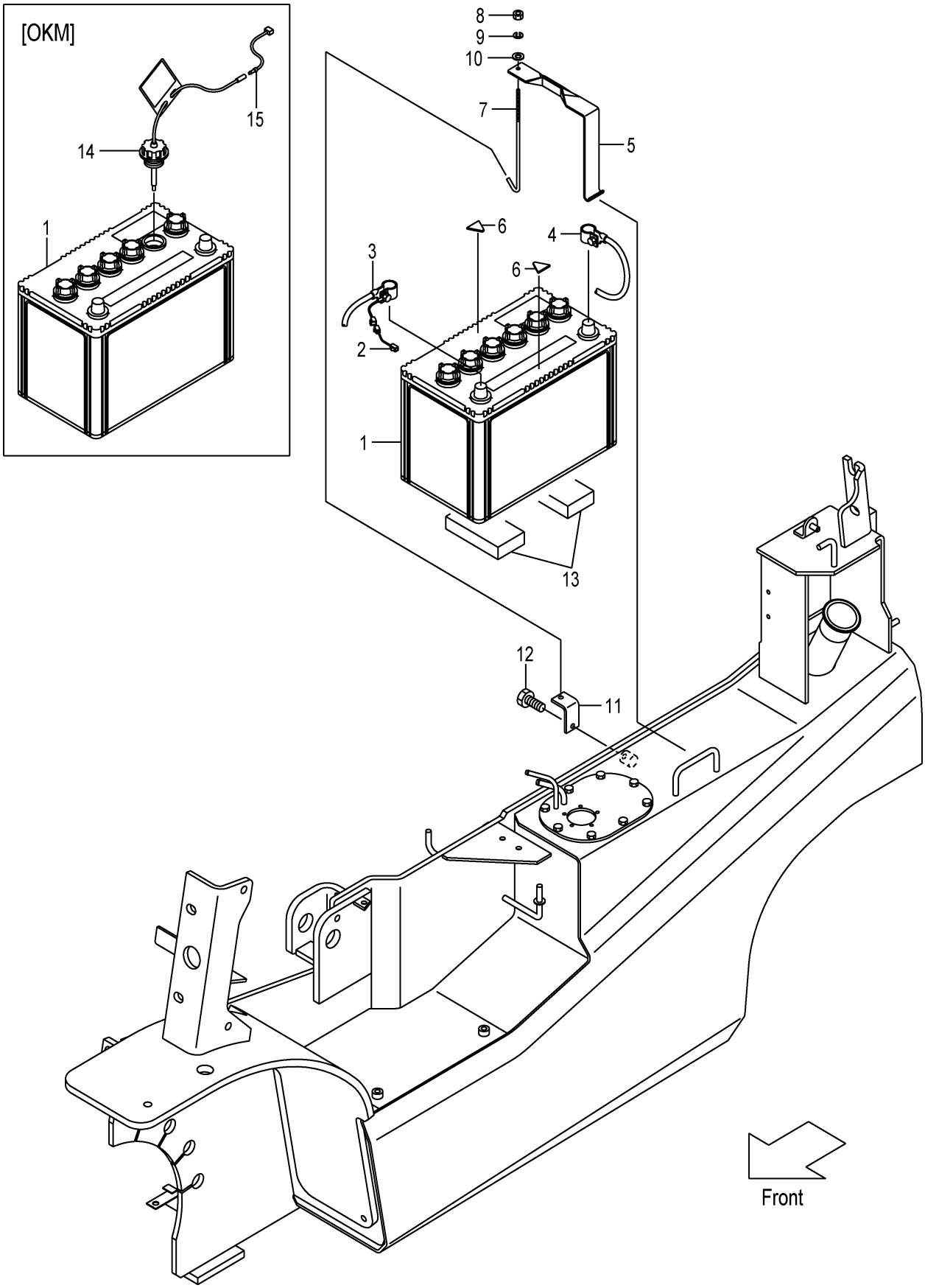

FIG.19

(F7Z124F0)

A:FHD15C3Z FHD15T3Z FHD18C3Z FHD18T3Z

Item No	Part No.	Mark	Description		Req'd	Remarks : Serial No.
1	58106-31011		BATTERY,WET,80D26R	ﾊﾞｯﾃﾘ	1	
-	534A7-02001		BATTERY,WET,115D31R	ﾊﾞｯﾃﾘ	1	[WS]
2	25592-42081		WIRE,FUSIBLE-LINK	ﾜｲﾔ	1	
3	22U52-42151		CABLE,BATTERY(+)	ｹｰﾌﾞﾙ	1	
4	238A2-42151		CABLE,BATTERY(-)	ｹｰﾌﾞﾙ	1	
5	217G2-42021		HOLDER,BATTERY	ﾎﾙﾀﾞ	1	
6	216G2-43111		RUBBER	ﾗﾊﾞｰ	2	
7	23072-42001		BOLT,ANCHOR	ﾎﾞﾙﾄ	1	
8	01400-00006		NUT	ﾅｯﾄ	1	
9	02010-00006		WASHER	ﾜｯｼｬ	1	
10	02000-00006		WASHER	ﾜｯｼｬ	1	
11	239A2-42101		HOOK,ANCHOR-BOLT	ﾌｯｸ	1	
12	01185-08016		BOLT	ﾎﾞﾙﾄ	1	
13	22N52-42301		RUBBER	ﾗﾊﾞｰ	2	
14	521A2-42001		CAP,BATTERY	ｷｬｯﾌﾟ	1	[OKM]
-	522A2-42001		CAP,BATTERY	ｷｬｯﾌﾟ	1	[OKM/WS]
15	539A6-22021		WIRE,LEAD	ﾜｲﾔ	1	[OKM]

FIG.20 HEAD LAMP & FRONT COMBINATION LAMP

(F7Z124G0) ﾍｯﾄﾞﾗﾝﾌﾟ&ﾌﾛﾝﾄｺﾝﾋﾞﾈｰｼｮﾝﾗﾝﾌﾟ

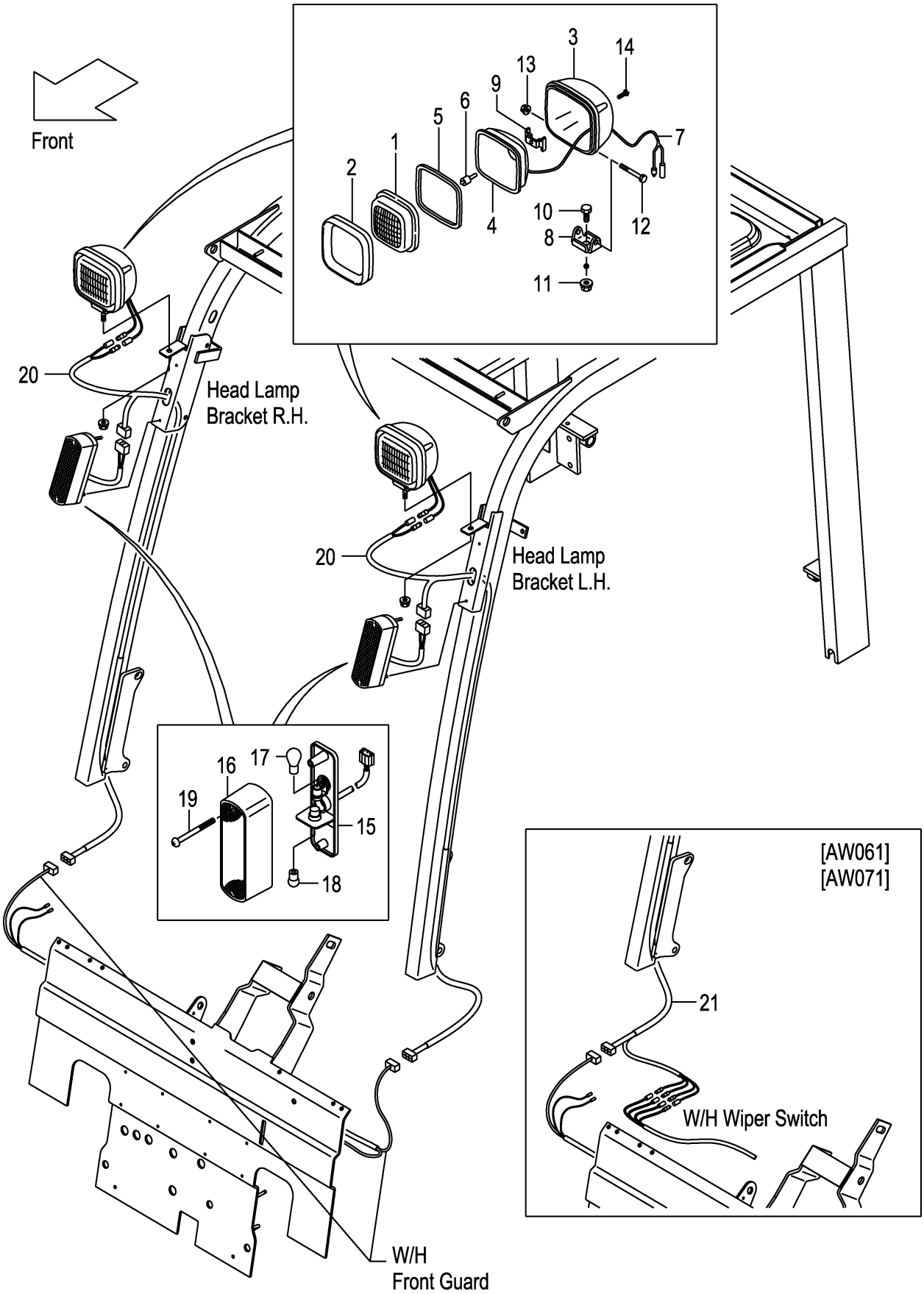

FIG.20

(F7Z124G0)

A:FHD15C3Z FHD15T3Z FHD18C3Z FHD18T3Z

Item No	Part No.	Mark	Description		Req'd	Remarks : Serial No.
A1	216G2-40602		LAMP-ASSY,HEAD	ﾍｯﾄﾞﾗﾝﾌﾟｱｯｾﾝ	2	INC.1-14
1	235C2-42131		LENS	ﾚﾝｽﾞ	2	
2	235C2-42141		RIM	ﾘﾑ	2	
3	NO PART NO.	#	HOUSING	ﾊｳｼﾞﾝｸﾞ	2	
4	NO PART NO.	#	REFLECTOR	ﾘﾌﾚｸﾀ	2	
5	216G2-43531		GASKET	ｶﾞｽｹｯﾄ	2	
6	216G2-43542		BULB,12V/55W	ﾊﾞﾙﾌﾞ	2	
7	NO PART NO.	#	WIRE,LEAD	ﾜｲﾔ	2	
8	NO PART NO.	#	BRACKET	ﾌﾞﾗｹｯﾄ	2	
9	216G2-43571		SPRING	ｽﾌﾟﾘﾝｸﾞ	2	
10	01100-08020		BOLT	ﾎﾞﾙﾄ	2	
11	216G2-43592		NUT	ﾅｯﾄ	2	
12	01100-06050		BOLT	ﾎﾞﾙﾄ	2	
13	216G2-43611		NUT	ﾅｯﾄ	2	
14	01030-04018		SCREW	ｽｸﾘｭ	8	
A2	216G2-40701		LAMP-ASSY,F-COMBINATION	ﾌﾛﾝﾄｺﾝﾋﾞﾈｰｼｮﾝﾗﾝﾌﾟｱｯｾﾝ	2	INC.15-19
15	NO PART NO.	#	BODY	ﾎﾞﾃﾞｨ	2	
16	216G2-40731		LENS	ﾚﾝｽﾞ	2	
17	216G2-40711		BULB,12V/27W	ﾊﾞﾙﾌﾞ	2	
18	216G2-40721		BULB,12V/10W	ﾊﾞﾙﾌﾞ	2	
19	NO PART NO.		SCREW	ｽｸﾘｭ	4	
20	239A2-42221		WIRE-HARNESS,H.GUARD	ﾜｲﾔﾊｰﾈｽ	2	
-	534A9-22211		WIRE-HARNESS,H.GUARD	ﾜｲﾔﾊｰﾈｽ	2	[HL][BKH]
-	239A2-42221		WIRE-HARNESS,H.GUARD	ﾜｲﾔﾊｰﾈｽ	1	[AW061][AW071]
21	52N55-42301		WIRE-HARNESS,H.GUARD	ﾜｲﾔﾊｰﾈｽ	1	[AW061][AW071]

FIG.21 REAR COMBINATION LAMP

(F7Z124H0) ﾘﾔｰｺﾝﾋﾞﾈｰｼｮﾝﾗﾝﾌﾟ

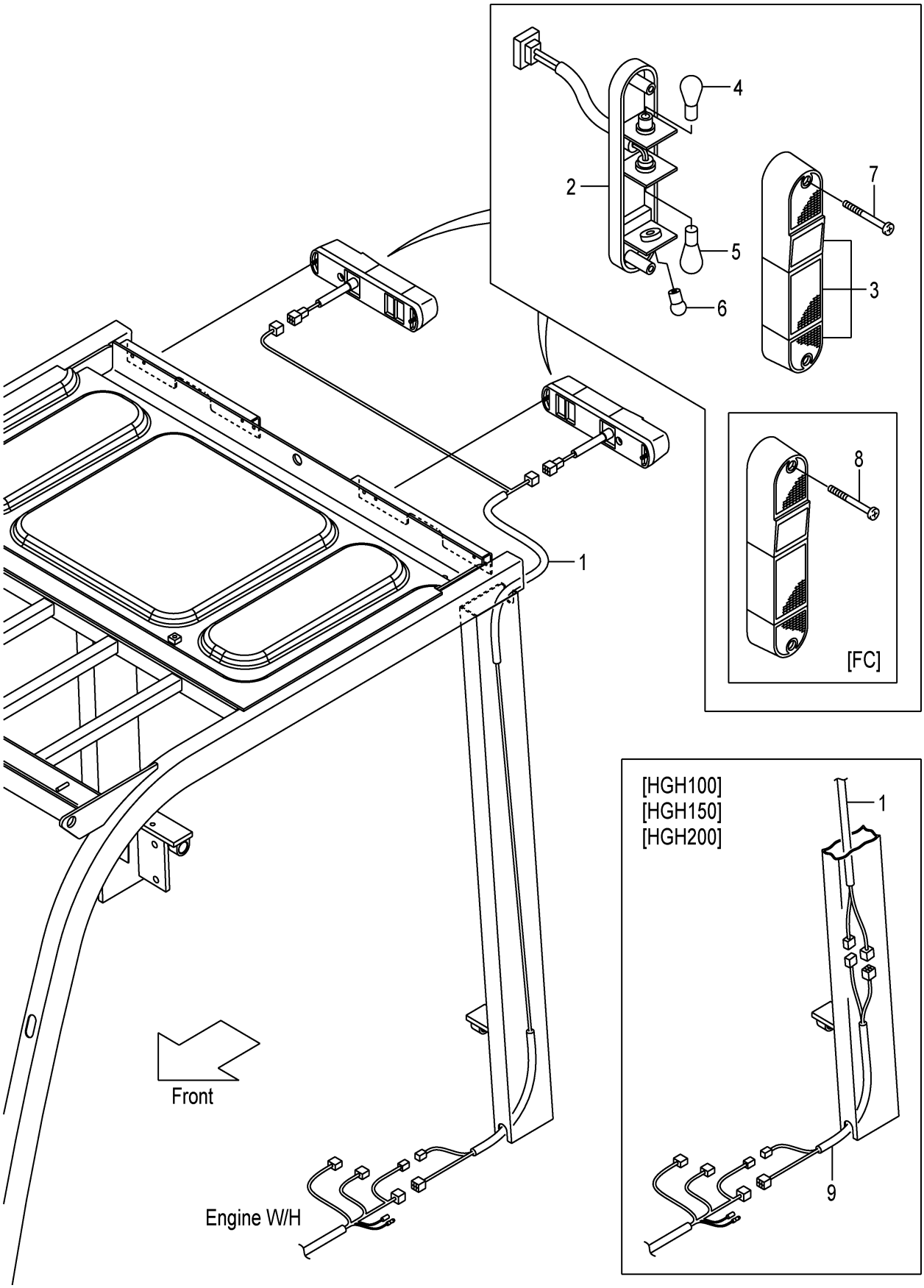

FIG.21

(F7Z124H0)

A:FHD15C3Z FHD15T3Z FHD18C3Z FHD18T3Z

Item No	Part No.	Mark	Description		Req'd	Remarks : Serial No.
1	22N52-42251		WIRE-HARNESS,R-COMBINATION	ﾜｲﾔﾊｰﾈｽ	1	
A1	209K2-42002		LAMP-ASSY,R-COMBINATION	ﾘﾔｰｺﾝﾋﾞﾈｰｼｮﾝﾗﾝﾌﾟｱｯｾﾝ	2	INC.2-7
2	NO PART NO.	#	BODY	ﾎﾞﾃﾞｨ	2	
3	209K2-42021		LENS,PLASTIC	ﾚﾝｽﾞ	2	
4	214A2-44501		BULB,12V/23,8W	ﾊﾞﾙﾌﾞ	2	
5	209K2-42041		BULB,12V/23W	ﾊﾞﾙﾌﾞ	2	
6	210F2-42031		BULB,12V/10W	ﾊﾞﾙﾌﾞ	2	
7	01030-05055		SCREW	ｽｸﾘｭ	4	(WITHOUT FC)
8	514A3-72091		BOLT,PAN-HEAD	ﾎﾞﾙﾄ	4	[FC]
9	52N55-02451		WIRE-HARNESS,JOINT	ﾜｲﾔﾊｰﾈｽ	1	[HGH100][HGH150][HGH200]

FIG.22 LICENSE LAMP [LP]

(F7Z124N0) ﾗｲｾﾝｽﾗﾝﾌﾟ

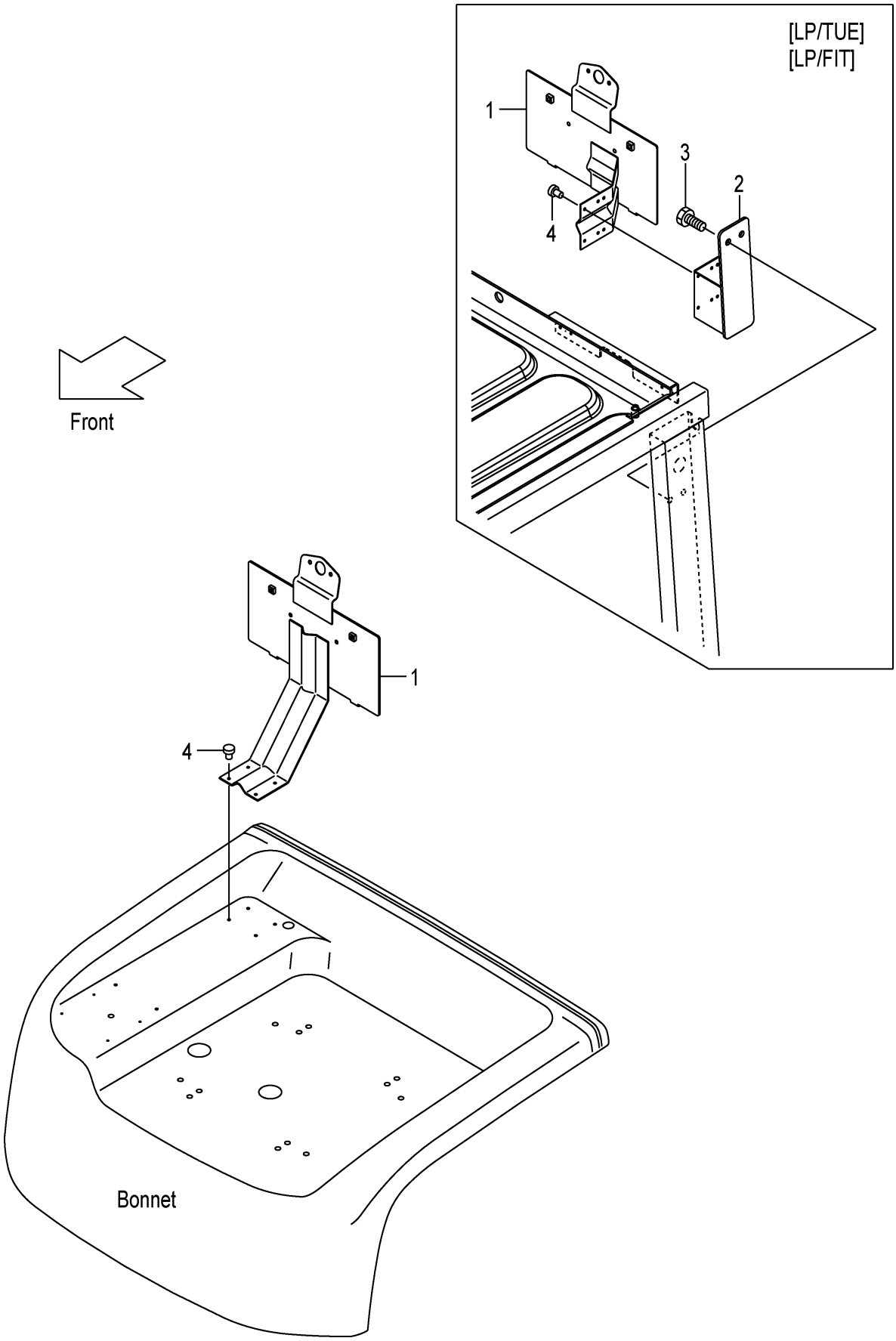

FIG.22

A:FHD15C3Z FHD18C3Z
B:FHD15T3Z FHD18T3Z

(F7Z124N0)

Item No	Part No.	Mark	Description	Req'd	Remarks : Serial No.
1	52N59-92101		BRACKET,NUMBER-PLATE ﾌﾞﾗｹｯﾄ	1	[LP]
-	509P9-90101		BRACKET,NUMBER-PLATE ﾌﾞﾗｹｯﾄ	1	[LP/TUE]
-	509P9-90101		BRACKET,NUMBER-PLATE ﾌﾞﾗｹｯﾄ	1	B
					[LP/FIT]
2	52N59-92501		BRACKET,LP ﾌﾞﾗｹｯﾄ	1	[LP/TUE]
-	52N59-92501		BRACKET,LP ﾌﾞﾗｹｯﾄ	1	B
					[LP/FIT]
3	01185-08016		BOLT ﾎﾞﾙﾄ	2	[LP/TUE]
-	01185-08016		BOLT ﾎﾞﾙﾄ	2	B
					[LP/FIT]
4	22256-42001		RIVET ﾘﾍﾞｯﾄ	4	[LP]

FIG.23 REAR WORKING LIGHT [RWLR]

(F7Z124P0) ﾘﾔｰﾜｰｷﾝｸﾞﾗｲﾄ

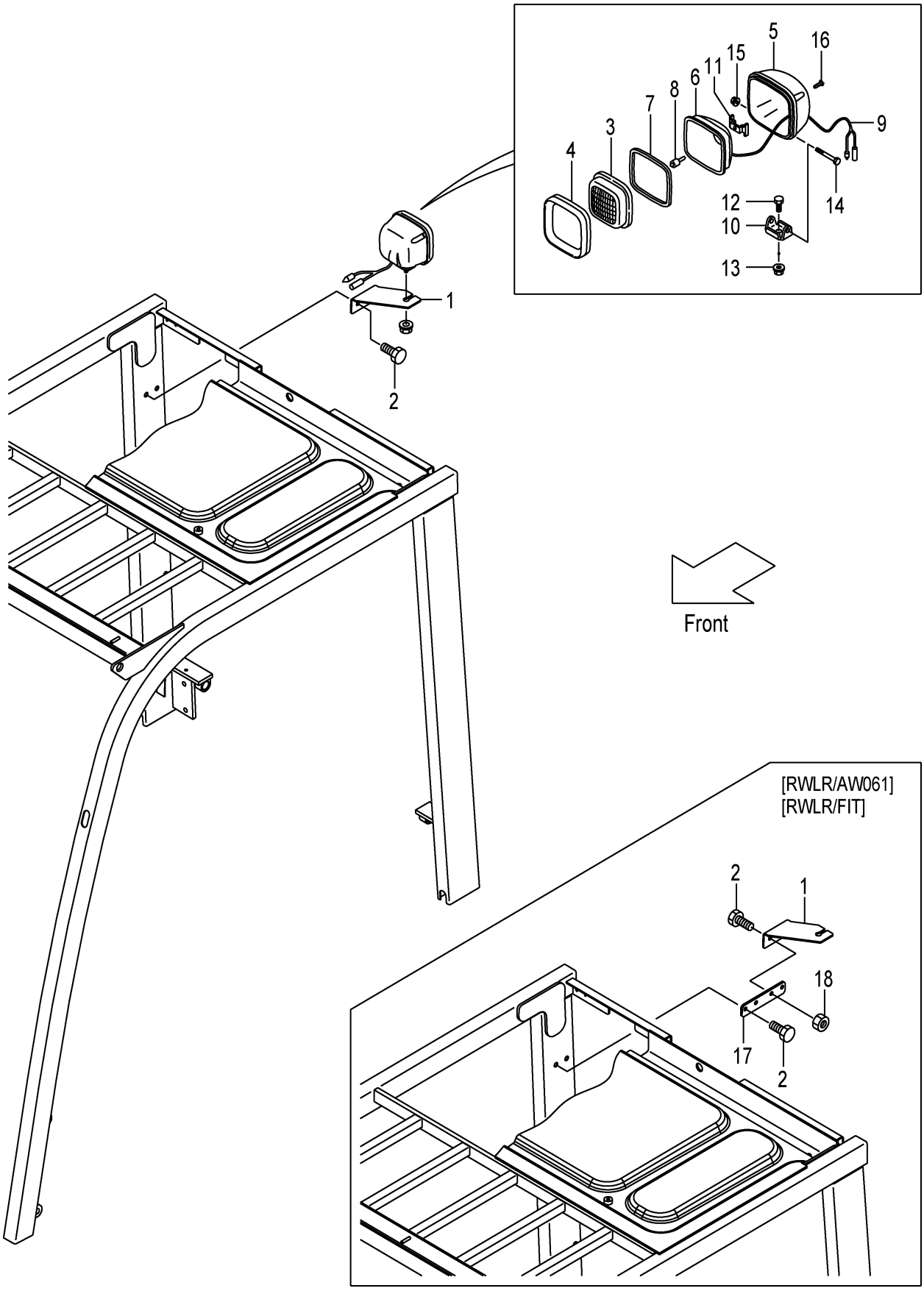

A:FHD15C3Z FHD18C3Z
B:FHD15T3Z FHD18T3Z

Item No	Part No.	Mark	Description		Req'd	Remarks : Serial No.
1	52N51-42161		BRACKET,RWL,RH	ﾌﾞﾗｹｯﾄ	1	[RWLR]
2	01185-08016		BOLT	ﾎﾞﾙﾄ	2	[RWLR]
-	01185-08016		BOLT	ﾎﾞﾙﾄ	4	[RWLR/AW061]
-	01185-08016		BOLT	ﾎﾞﾙﾄ	4	B
						[RWLR/FIT]
A1	216G2-40602		LAMP-ASSY,HEAD	ﾍｯﾄﾞﾗﾝﾌﾟｱｯｾﾝ	1	[RWLR] INC.3-16
3	235C2-42131		LENS	ﾚﾝｽﾞ	1	[RWLR]
4	235C2-42141		RIM	ﾘﾑ	1	[RWLR]
5	NO PART NO.	#	HOUSING	ﾊｳｼﾞﾝｸﾞ	1	[RWLR]
6	NO PART NO.	#	REFLECTOR	ﾘﾌﾚｸﾀ	1	[RWLR]
7	216G2-43531		GASKET	ｶﾞｽｹｯﾄ	1	[RWLR]
8	216G2-43542		BULB,12V/55W	ﾊﾞﾙﾌﾞ	1	[RWLR]
9	NO PART NO.	#	WIRE,LEAD	ﾜｲﾔ	1	[RWLR]
10	NO PART NO.	#	BRACKET	ﾌﾞﾗｹｯﾄ	1	[RWLR]
11	216G2-43571		SPRING	ｽﾌﾟﾘﾝｸﾞ	1	[RWLR]
12	01100-08020		BOLT	ﾎﾞﾙﾄ	1	[RWLR]
13	216G2-43592		NUT	ﾅｯﾄ	1	[RWLR]
14	01100-06050		BOLT	ﾎﾞﾙﾄ	1	[RWLR]
15	216G2-43611		NUT	ﾅｯﾄ	1	[RWLR]
16	01030-04018		SCREW	ｽｸﾘｭ	4	[RWLR]
17	52N51-42301		PLATE	ﾌﾟﾚｰﾄ	1	[RWLR/AW061]
-	52N51-42301		PLATE	ﾌﾟﾚｰﾄ	1	B
						[RWLR/FIT]
18	01400-00008		NUT	ﾅｯﾄ	2	[RWLR/AW061]
-	01400-00008		NUT	ﾅｯﾄ	2	B
						[RWLR/FIT]

FIG.24 REAR WORKING LIGHT [RWLL]

(F7Z124Q0) ﾘﾔｰﾜｰｷﾝｸﾞﾗｲﾄ

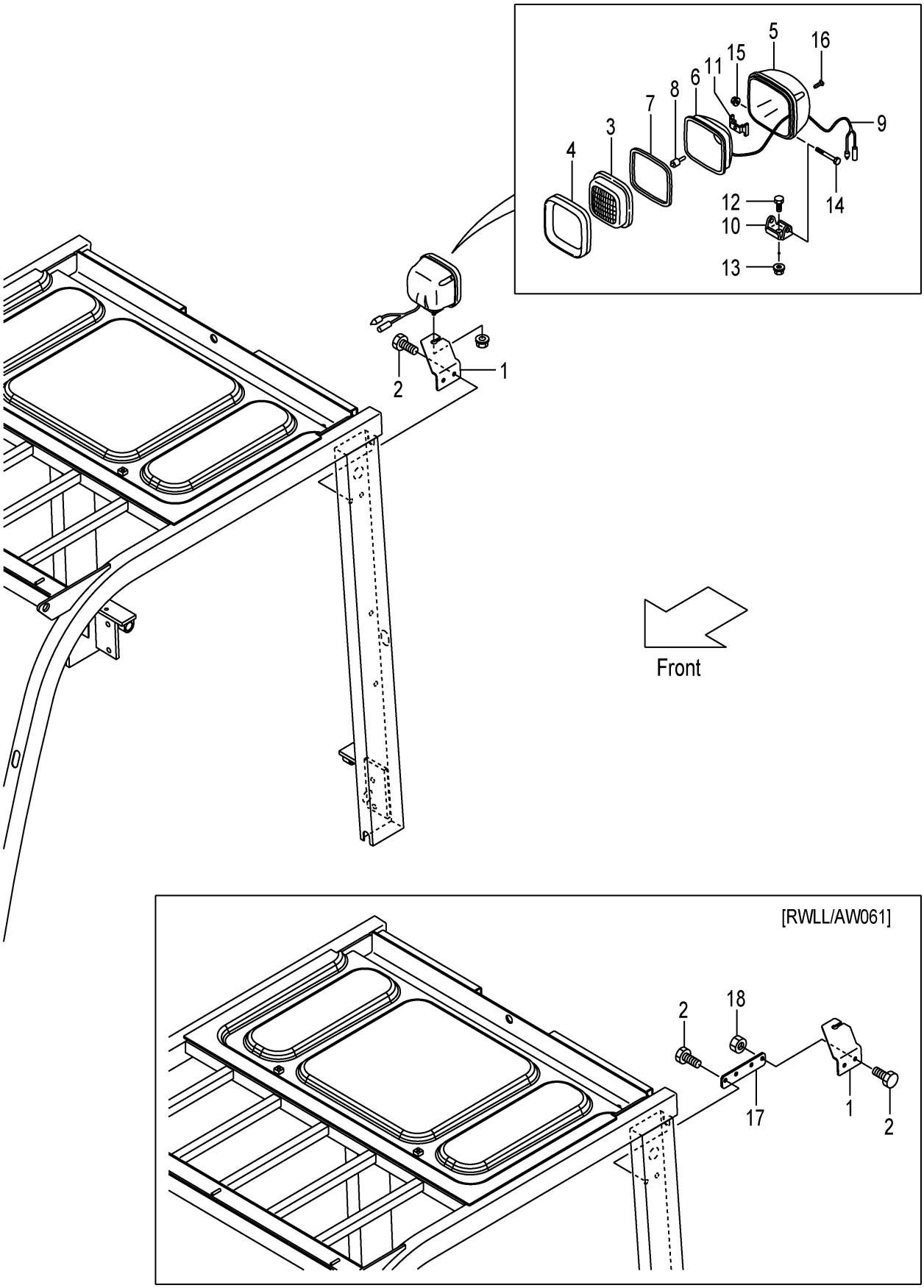

FIG.24

(F7Z124Q0)

A:FHD15C3Z FHD15T3Z FHD18C3Z FHD18T3Z

Item No	Part No.	Mark	Description		Req'd	Remarks : Serial No.
1	52N51-42151		BRACKET,RWL,LH	ﾌﾞﾗｹｯﾄ	1	[RWLL]
2	01185-08016		BOLT	ﾎﾞﾙﾄ	2	[RWLL]
-	01185-08016		BOLT	ﾎﾞﾙﾄ	4	[RWLL/AW061]
A1	216G2-40602		LAMP-ASSY,HEAD	ﾍｯﾄﾞﾗﾝﾌﾟｱｯｾﾝ	1	[RWLL] INC.3-16
3	235C2-42131		LENS	ﾚﾝｽﾞ	1	[RWLL]
4	235C2-42141		RIM	ﾘﾑ	1	[RWLL]
5	NO PART NO.	#	HOUSING	ﾊｳｼﾞﾝｸﾞ	1	[RWLL]
6	NO PART NO.	#	REFLECTOR	ﾘﾌﾚｸﾀ	1	[RWLL]
7	216G2-43531		GASKET	ｶﾞｽｹｯﾄ	1	[RWLL]
8	216G2-43542		BULB,12V/55W	ﾊﾞﾙﾌﾞ	1	[RWLL]
9	NO PART NO.	#	WIRE,LEAD	ﾜｲﾔ	1	[RWLL]
10	NO PART NO.	#	BRACKET	ﾌﾞﾗｹｯﾄ	1	[RWLL]
11	216G2-43571		SPRING	ｽﾌﾟﾘﾝｸﾞ	1	[RWLL]
12	01100-08020		BOLT	ﾎﾞﾙﾄ	1	[RWLL]
13	216G2-43592		NUT	ﾅｯﾄ	1	[RWLL]
14	01100-06050		BOLT	ﾎﾞﾙﾄ	1	[RWLL]
15	216G2-43611		NUT	ﾅｯﾄ	1	[RWLL]
16	01030-04018		SCREW	ｽｸﾘｭ	4	[RWLL]
17	52N51-42301		PLATE	ﾌﾟﾚｰﾄ	1	[RWLL/AW061]
18	01400-00008		NUT	ﾅｯﾄ	2	[RWLL/AW061]

FIG.25 REAR WORKING LIGHT [RWL2]

(F7Z124R0) リヤーワーキング゛ライト

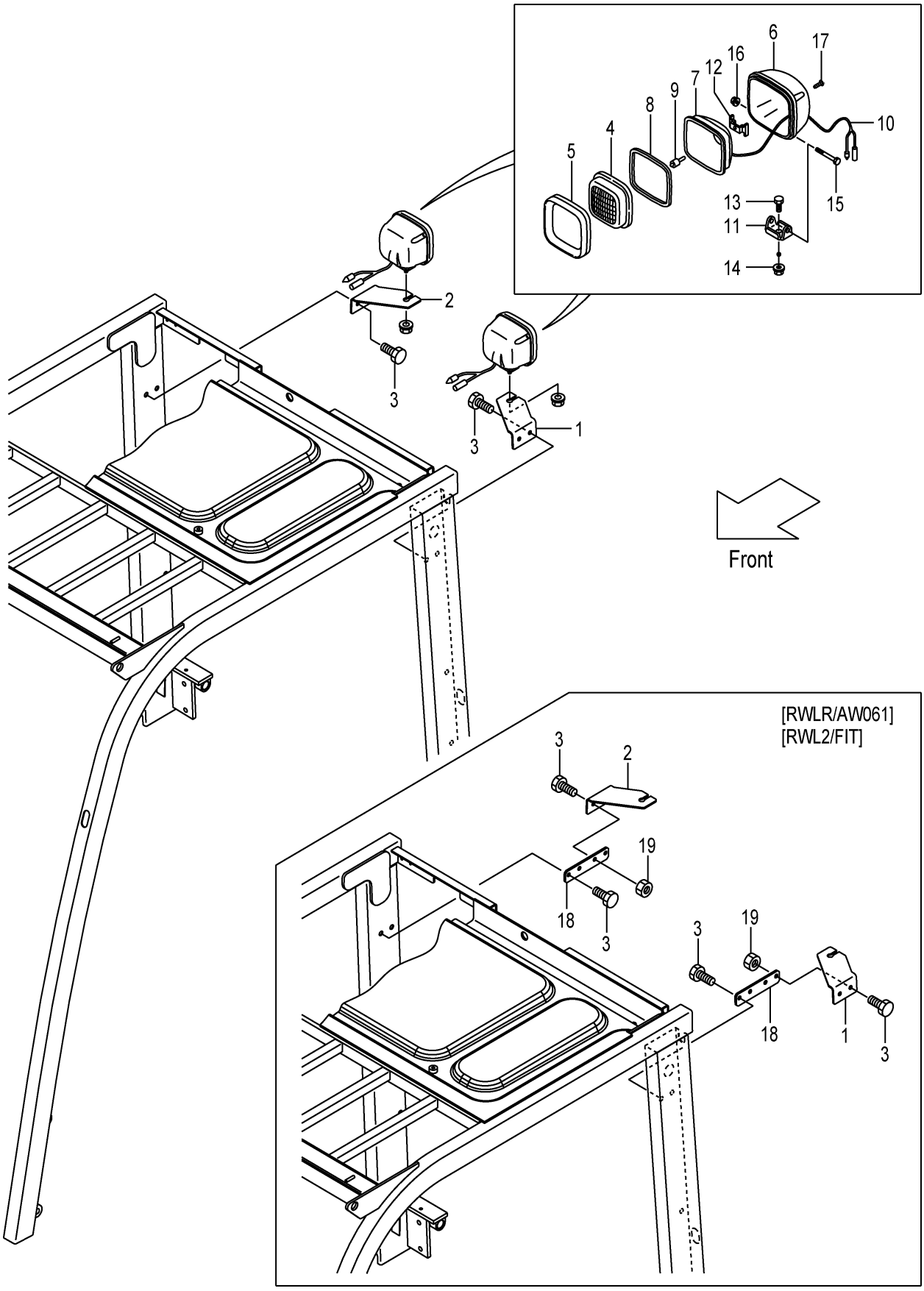

A:FHD15C3Z FHD18C3Z
B:FHD15T3Z FHD18T3Z

Item No	Part No.	Mark	Description		Req'd	Remarks : Serial No.
1	52N51-42151		BRACKET,RWL,LH	ﾌﾞﾗｹｯﾄ	1	[RWL2]
2	52N51-42161		BRACKET,RWL,RH	ﾌﾞﾗｹｯﾄ	1	[RWL2]
3	01185-08016		BOLT	ﾎﾞﾙﾄ	4	[RWL2]
-	01185-08016		BOLT	ﾎﾞﾙﾄ	8	[RWL2/AW061]
-	01185-08016		BOLT	ﾎﾞﾙﾄ	8	B
						[RWL2/FIT]
A1	216G2-40602		LAMP-ASSY,HEAD	ﾍｯﾄﾞﾗﾝﾌﾟｱｯｾﾝ	2	[RWL2] INC.4-17
4	235C2-42131		LENS	ﾚﾝｽﾞ	2	[RWL2]
5	235C2-42141		RIM	ﾘﾑ	2	[RWL2]
6	NO PART NO.	#	HOUSING	ﾊｳｼﾞﾝｸﾞ	2	[RWL2]
7	NO PART NO.	#	REFLECTOR	ﾘﾌﾚｸﾀ	2	[RWL2]
8	216G2-43531		GASKET	ｶﾞｽｹｯﾄ	2	[RWL2]
9	216G2-43542		BULB,12V/55W	ﾊﾞﾙﾌﾞ	2	[RWL2]
10	NO PART NO.	#	WIRE,LEAD	ﾜｲﾔ	2	[RWL2]
11	NO PART NO.	#	BRACKET	ﾌﾞﾗｹｯﾄ	2	[RWL2]
12	216G2-43571		SPRING	ｽﾌﾟﾘﾝｸﾞ	2	[RWL2]
13	01100-08020		BOLT	ﾎﾞﾙﾄ	2	[RWL2]
14	216G2-43592		NUT	ﾅｯﾄ	2	[RWL2]
15	01100-06050		BOLT	ﾎﾞﾙﾄ	2	[RWL2]
16	216G2-43611		NUT	ﾅｯﾄ	2	[RWL2]
17	01030-04018		SCREW	ｽｸﾘｭ	8	[RWL2]
18	52N51-42301		PLATE	ﾌﾟﾚｰﾄ	2	[RWL2/AW061]
-	52N51-42301		PLATE	ﾌﾟﾚｰﾄ	2	B
						[RWL2/FIT]
19	01400-00008		NUT	ﾅｯﾄ	4	[RWL2/AW061]
-	01400-00008		NUT	ﾅｯﾄ	4	B
						[RWL2/FIT]

REAR WORKING LIGHT

FIG.26 [RWL/FE][RWL/TUE][RWL/CAKB]

(F7Z124S0) ﾘﾔｰﾜｰｷﾝｸﾞﾗｲﾄ

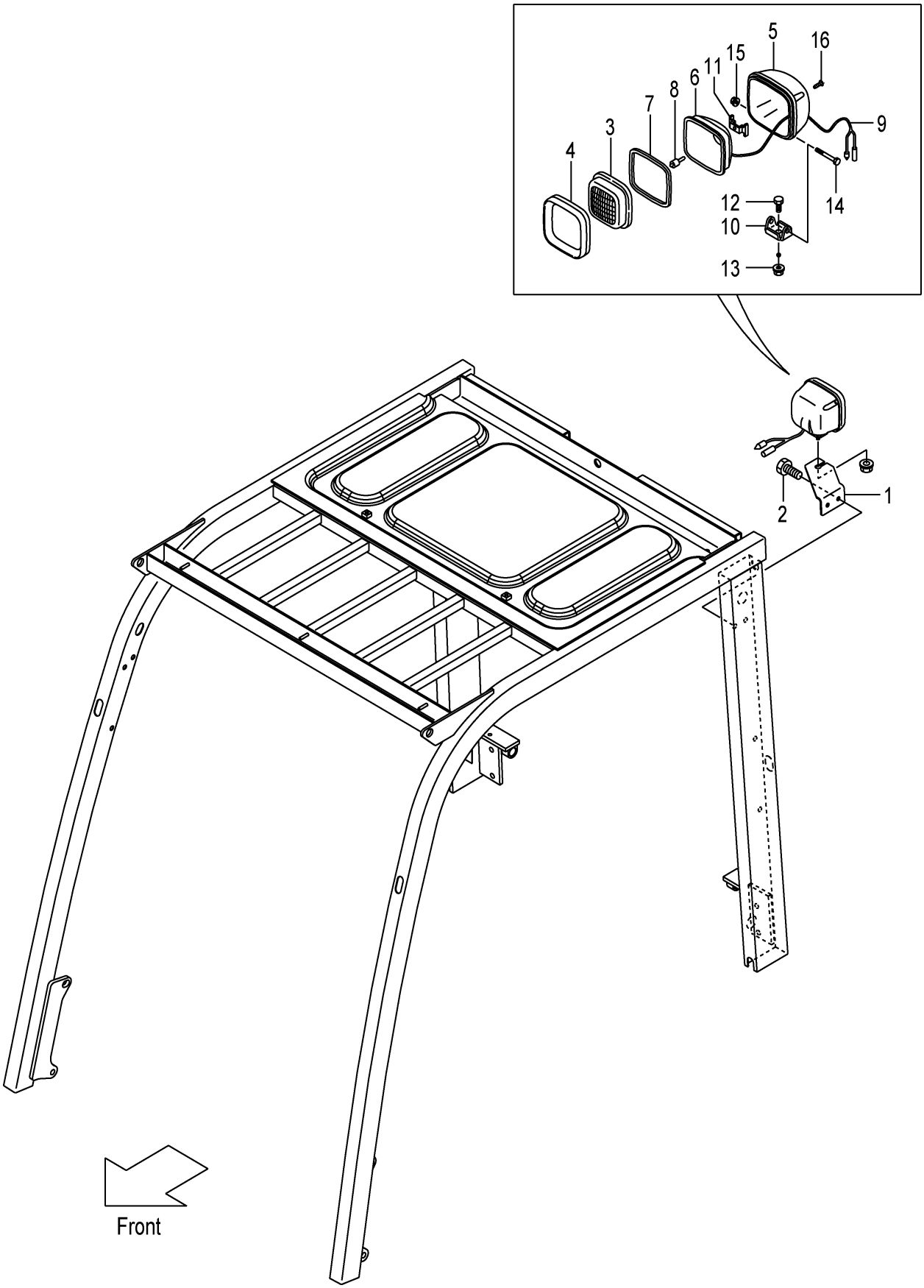

FIG.26

(F7Z124S0)

A:FHD15C3Z FHD15T3Z FHD18C3Z FHD18T3Z

Item No	Part No.	Mark	Description		Req'd	Remarks : Serial No.
1	52N51-42151		BRACKET,RWL,LH	ﾌﾞﾗｹｯﾄ	1	[RWL/FE][RWL/TUE][RWL/CAKB]
2	01185-08016		BOLT	ﾎﾞﾙﾄ	2	[RWL/FE][RWL/TUE][RWL/CAKB]
A1	216G2-40602		LAMP-ASSY,HEAD	ﾍｯﾄﾞﾗﾝﾌﾟｱｯｾﾝ	1	[RWL/FE][RWL/TUE][RWL/CAKB]
						INC.3-16
3	235C2-42131		LENS	ﾚﾝｽﾞ	1	[RWL/FE][RWL/TUE][RWL/CAKB]
4	235C2-42141		RIM	ﾘﾑ	1	[RWL/FE][RWL/TUE][RWL/CAKB]
5	NO PART NO.	#	HOUSING	ﾊｳｼﾞﾝｸﾞ	1	[RWL/FE][RWL/TUE][RWL/CAKB]
6	NO PART NO.	#	REFLECTOR	ﾘﾌﾚｸﾀ	1	[RWL/FE][RWL/TUE][RWL/CAKB]
7	216G2-43531		GASKET	ｶﾞｽｹｯﾄ	1	[RWL/FE][RWL/TUE][RWL/CAKB]
8	216G2-43542		BULB,12V/55W	ﾊﾞﾙﾌﾞ	1	[RWL/FE][RWL/TUE][RWL/CAKB]
9	NO PART NO.	#	WIRE,LEAD	ﾜｲﾔ	1	[RWL/FE][RWL/TUE][RWL/CAKB]
10	NO PART NO.	#	BRACKET	ﾌﾞﾗｹｯﾄ	1	[RWL/FE][RWL/TUE][RWL/CAKB]
11	216G2-43571		SPRING	ｽﾌﾟﾘﾝｸﾞ	1	[RWL/FE][RWL/TUE][RWL/CAKB]
12	01100-08020		BOLT	ﾎﾞﾙﾄ	1	[RWL/FE][RWL/TUE][RWL/CAKB]
13	216G2-43592		NUT	ﾅｯﾄ	1	[RWL/FE][RWL/TUE][RWL/CAKB]
14	01100-06050		BOLT	ﾎﾞﾙﾄ	1	[RWL/FE][RWL/TUE][RWL/CAKB]
15	216G2-43611		NUT	ﾅｯﾄ	1	[RWL/FE][RWL/TUE][RWL/CAKB]
16	01030-04018		SCREW	ｽｸﾘｭ	4	[RWL/FE][RWL/TUE][RWL/CAKB]

FIG.27 REAR WORKING LIGHT WIRE HARNESS [RWL]

(F7Z124T0) ﾘﾔｰﾜｰｷﾝｸﾞﾗｲﾄﾜｲﾔﾊｰﾈｽ

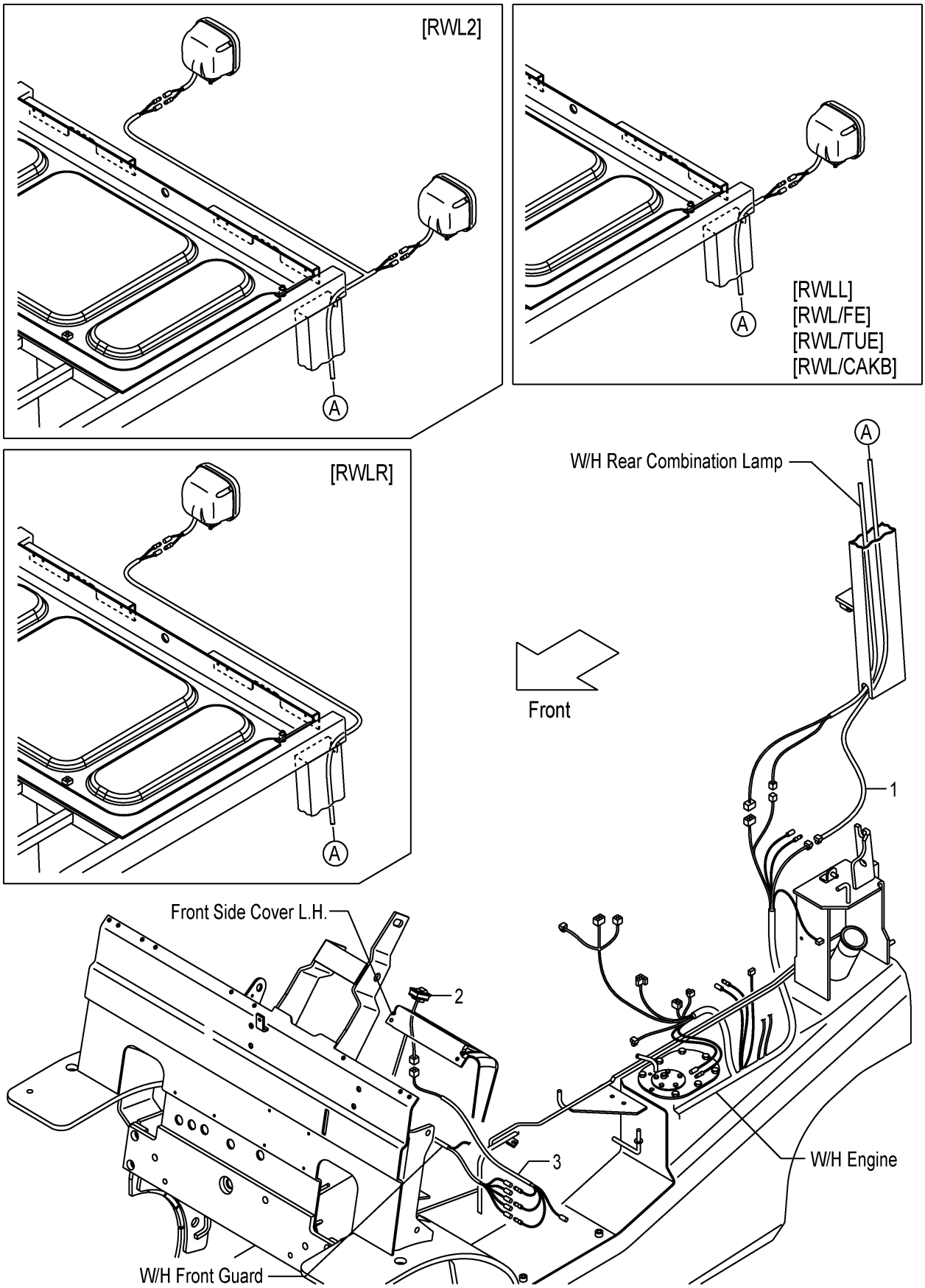

FIG.27

(F7Z124T0)

A:FHD15C3Z FHD15T3Z FHD18C3Z FHD18T3Z

Item No	Part No.	Mark	Description		Req'd	Remarks : Serial No.
1	52N51-42101		WIRE,LEAD,RWL	ﾜｲﾔ	1	[RWLR]
-	52N51-42111		WIRE,LEAD,RWL	ﾜｲﾔ	1	[RWLL]
-	52N51-42121		WIRE,LEAD,RWL	ﾜｲﾔ	1	[RWL2]
-	52N51-42111		WIRE,LEAD,RWL	ﾜｲﾔ	1	[RWL/FE][RWL/TUE][RWL/CAKB]
2	52N51-42401		SWITCH,RWL	ｽｲｯﾁ	1	[RWLR][RWLL][RWL2]
-	52N51-42401		SWITCH,RWL	ｽｲｯﾁ	1	[RWL/FE][RWL/TUE][RWL/CAKB]
3	52N51-42411		WIRE-HARNESS,SWITCH	ﾜｲﾔﾊｰﾈｽ	1	[RWLR][RWLL][RWL2]
-	52N51-42411		WIRE-HARNESS,SWITCH	ﾜｲﾔﾊｰﾈｽ	1	[RWL/FE][RWL/TUE][RWL/CAKB]
-	52N51-42511		WIRE-HARNESS,SWITCH	ﾜｲﾔﾊｰﾈｽ	1	[RWLR/PLR][RWLL/PLR]
						[RWL2/PLR]

FIG.28 REAR WORKING LIGHT WIRE HARNESS [RWL/BBR]

(F7Z124U0) リヤーワーキング゛ライトワイヤハーネス

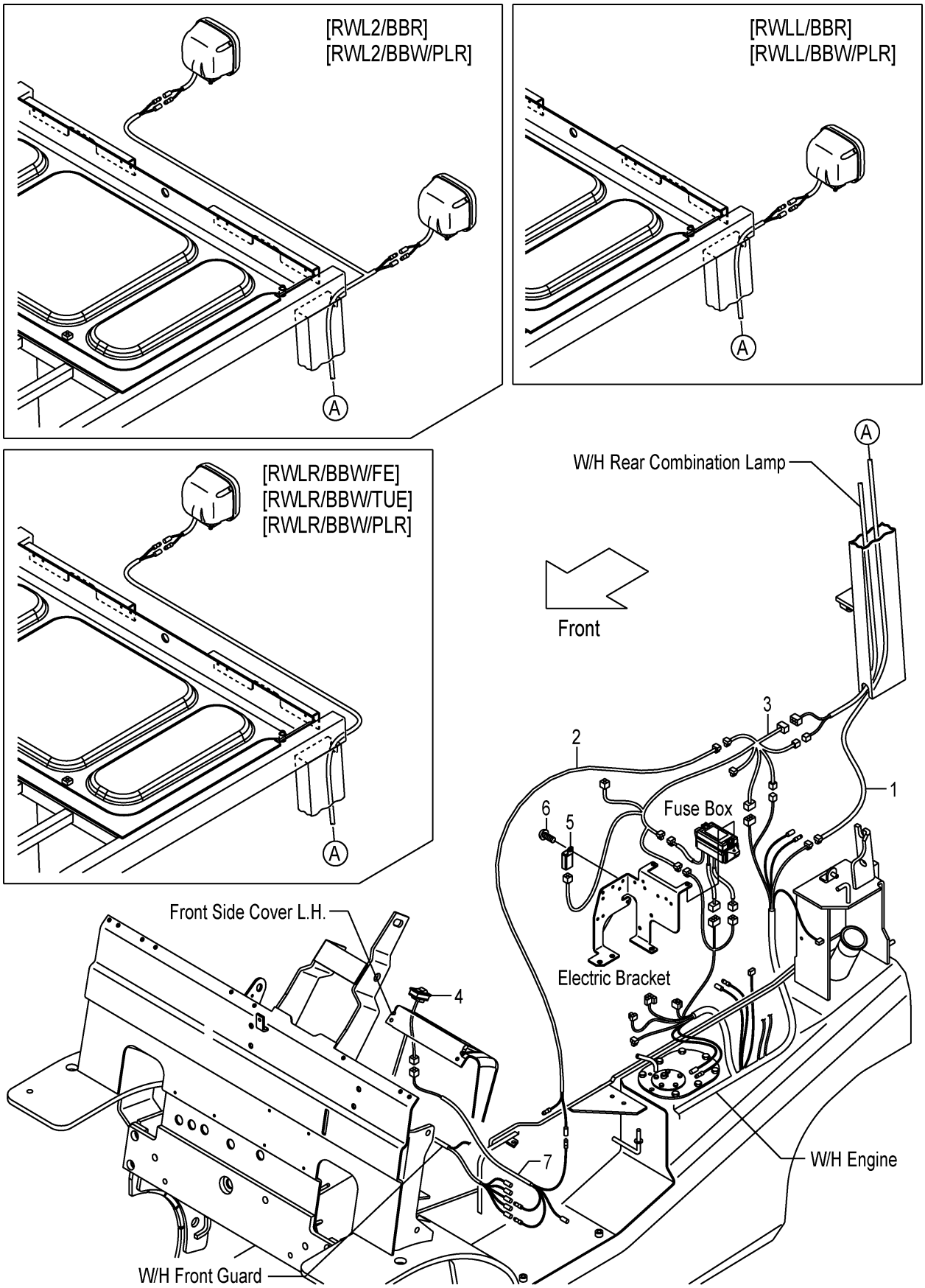

FIG.28
(F7Z124U0)

A:FHD15C3Z FHD15T3Z FHD18C3Z FHD18T3Z

Item No	Part No.	Mark	Description		Req'd	Remarks : Serial No.
1	52N51-42101		WIRE,LEAD,RWL	ﾜｲﾔ	1	[RWLR/BBR][RWLR/BBW/PLR]
-	52N51-42111		WIRE,LEAD,RWL	ﾜｲﾔ	1	[RWLL/BBR][RWLL/BBW/PLR]
-	52N51-42121		WIRE,LEAD,RWL	ﾜｲﾔ	1	[RWL2/BBR][RWL2/BBW/PLR]
-	52N51-42111		WIRE,LEAD,RWL	ﾜｲﾔ	1	[RWLR/BBW/FE][RWLR/BBW/TUE]
2	516G1-42111		WIRE,LEAD,RWL	ﾜｲﾔ	1	[RWLR/BBR][RWLL/BBR] [RWL2/BBR]
-	516G1-42111		WIRE,LEAD,RWL	ﾜｲﾔ	1	[RWLR/BBW/FE][RWLR/BBW/TUE] [RWLR/BBW/PLR]
-	516G1-42111		WIRE,LEAD,RWL	ﾜｲﾔ	1	[RWLL/BBW/PLR][RWL2/BBW/PLR]
3	52N58-92112		WIRE-HARNESS,BBR	ﾜｲﾔﾊｰﾈｽ	1	[RWLR/BBR][RWLL/BBR] [RWL2/BBR]
-	52N58-92112		WIRE-HARNESS,BBR	ﾜｲﾔﾊｰﾈｽ	1	[RWLR/BBW/FE][RWLR/BBW/TUE] [RWLR/BBW/PLR]
-	52N58-92112		WIRE-HARNESS,BBR	ﾜｲﾔﾊｰﾈｽ	1	[RWLL/BBW/PLR][RWL2/BBW/PLR]
4	52N51-42401		SWITCH,RWL	ｽｲｯﾁ	1	[RWLR/BBR][RWLL/BBR] [RWL2/BBR]
-	52N51-42401		SWITCH,RWL	ｽｲｯﾁ	1	[RWLR/BBW/FE][RWLR/BBW/TUE] [RWLR/BBW/PLR]
-	52N51-42401		SWITCH,RWL	ｽｲｯﾁ	1	[RWLL/BBW/PLR][RWL2/BBW/PLR]
5	209K2-42351		RELAY,12V	ﾘﾚｰ	1	[RWLR/BBR][RWLL/BBR] [RWL2/BBR]
-	209K2-42351		RELAY,12V	ﾘﾚｰ	1	[RWLR/BBW/FE][RWLR/BBW/TUE] [RWLR/BBW/PLR]
-	209K2-42351		RELAY,12V	ﾘﾚｰ	1	[RWLL/BBW/PLR][RWL2/BBW/PLR]
6	214A2-42611		SCREW	ｽｸﾘｭ	1	[RWLR/BBR][RWLL/BBR] [RWL2/BBR]
-	214A2-42611		SCREW	ｽｸﾘｭ	1	[RWLR/BBW/FE][RWLR/BBW/TUE] [RWLR/BBW/PLR]
-	214A2-42611		SCREW	ｽｸﾘｭ	1	[RWLL/BBW/PLR][RWL2/BBW/PLR]
7	52N51-42411		WIRE-HARNESS,SWITCH	ﾜｲﾔﾊｰﾈｽ	1	[RWLR/BBR][RWLL/BBR] [RWL2/BBR]
-	52N51-42411		WIRE-HARNESS,SWITCH	ﾜｲﾔﾊｰﾈｽ	1	[RWLR/BBW/FE][RWLR/BBW/TUE]
-	52N51-42511		WIRE-HARNESS,SWITCH	ﾜｲﾔﾊｰﾈｽ	1	[RWLR/BBW/PLR][RWLL/BBW/PLR] [RWL2/BBW/PLR]

FIG.29 REVOLVING LIGHT [RLY][RLR]

(F7Z124V0) ﾘﾎﾞﾙﾋﾞﾝｸﾞﾗｲﾄ

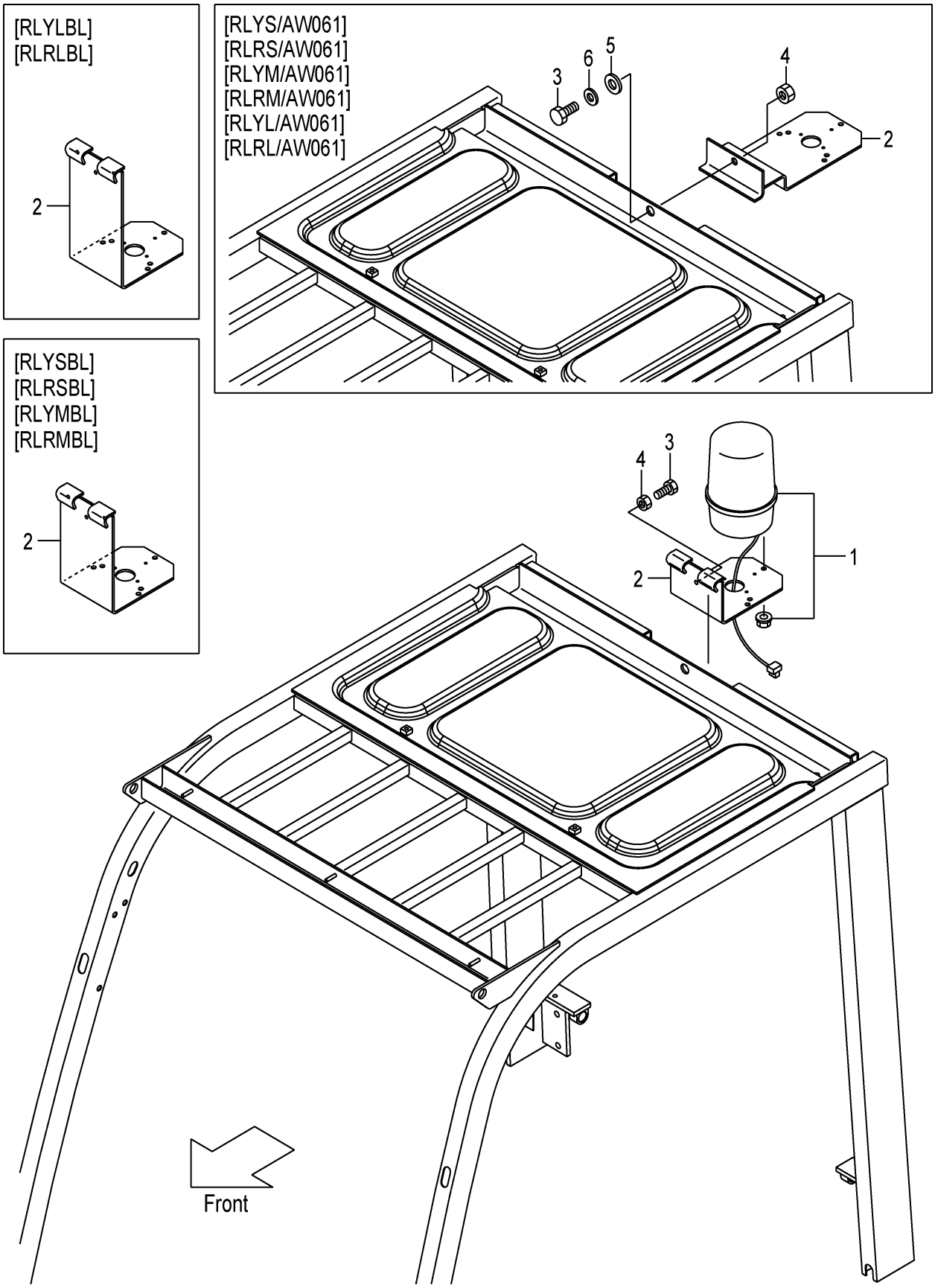

A:FHD15C3Z FHD15T3Z FHD18C3Z FHD18T3Z

Item No	Part No.	Mark	Description		Req'd	Remarks : Serial No.
1	514A1-41001		LIGHT,REVOLVING	ﾗｲﾄ	1	[RLYS][RLYSBL]
-	514A1-41011		LIGHT,REVOLVING	ﾗｲﾄ	1	[RLRS][RLRSBL]
-	514A1-41021		LIGHT,REVOLVING	ﾗｲﾄ	1	[RLYM][RLYMBL]
-	514A1-41031		LIGHT,REVOLVING	ﾗｲﾄ	1	[RLRM][RLRMBL]
-	52N58-92201		LIGHT,REVOLVING	ﾗｲﾄ	1	[RLYL][RLYLBL]
-	52N58-92211		LIGHT,REVOLVING	ﾗｲﾄ	1	[RLRL][RLRLBL]
2	529F1-42251		BRACKET,REVOLVING	ﾌﾞﾗｹｯﾄ	1	[RLYS][RLRS][RLYM][RLRM] [RLYL][RLRL]
-	529F1-42201		BRACKET,REVOLVING	ﾌﾞﾗｹｯﾄ	1	[RLYSBL][RLRSBL][RLYMBL] [RLRMBL]
-	52N58-92251		BRACKET,REVOLVING	ﾌﾞﾗｹｯﾄ	1	[RLYLBL][RLRLBL]
-	50A78-92201		BRACKET,REVOLVING	ﾌﾞﾗｹｯﾄ	1	[RLYS/AW061][RLYM/AW061] [RLYL/AW061]
-	50A78-92201		BRACKET,REVOLVING	ﾌﾞﾗｹｯﾄ	1	[RLRS/AW061][RLRM/AW061] [RLRL/AW061]
3	01100-08020		BOLT	ﾎﾞﾙﾄ	3	[RLYS][RLYM][RLYL]
-	01100-08020		BOLT	ﾎﾞﾙﾄ	3	[RLRS][RLRM][RLRL]
-	01100-08020		BOLT	ﾎﾞﾙﾄ	3	[RLYSBL][RLRSBL][RLYMBL] [RLRMBL][RLYLBL][RLRLBL]
-	01186-12030		BOLT	ﾎﾞﾙﾄ	1	[RLYS/AW061][RLYM/AW061] [RLYL/AW061]
-	01186-12030		BOLT	ﾎﾞﾙﾄ	1	[RLRS/AW061][RLRM/AW061] [RLRL/AW061]
4	01400-00008		NUT	ﾅｯﾄ	3	[RLYS][RLYM][RLYL]
-	01400-00008		NUT	ﾅｯﾄ	3	[RLRS][RLRM][RLRL]
-	01400-00008		NUT	ﾅｯﾄ	3	[RLYSBL][RLRSBL][RLYMBL] [RLRMBL][RLYLBL][RLRLBL]
-	01400-00012		NUT	ﾅｯﾄ	1	[RLYS/AW061][RLYM/AW061] [RLYL/AW061]
-	01400-00012		NUT	ﾅｯﾄ	1	[RLRS/AW061][RLRM/AW061] [RLRL/AW061]
5	02000-00014		WASHER	ﾜｯｼｬ	1	[RLYS/AW061][RLYM/AW061] [RLYL/AW061]
-	02000-00014		WASHER	ﾜｯｼｬ	1	[RLRS/AW061][RLRM/AW061] [RLRL/AW061]
6	02000-00012		WASHER	ﾜｯｼｬ	1	[RLYS/AW061][RLYM/AW061] [RLYL/AW061]
-	02000-00012		WASHER	ﾜｯｼｬ	1	[RLRS/AW061][RLRM/AW061] [RLRL/AW061]

FIG.30 REVOLVING LIGHT WIRE HARNESS [RLY][RLR]

(F7Z124W0) ﾘﾎﾞﾙﾋﾞﾝｸﾞﾗｲﾄﾜｲﾔﾊｰﾈｽ

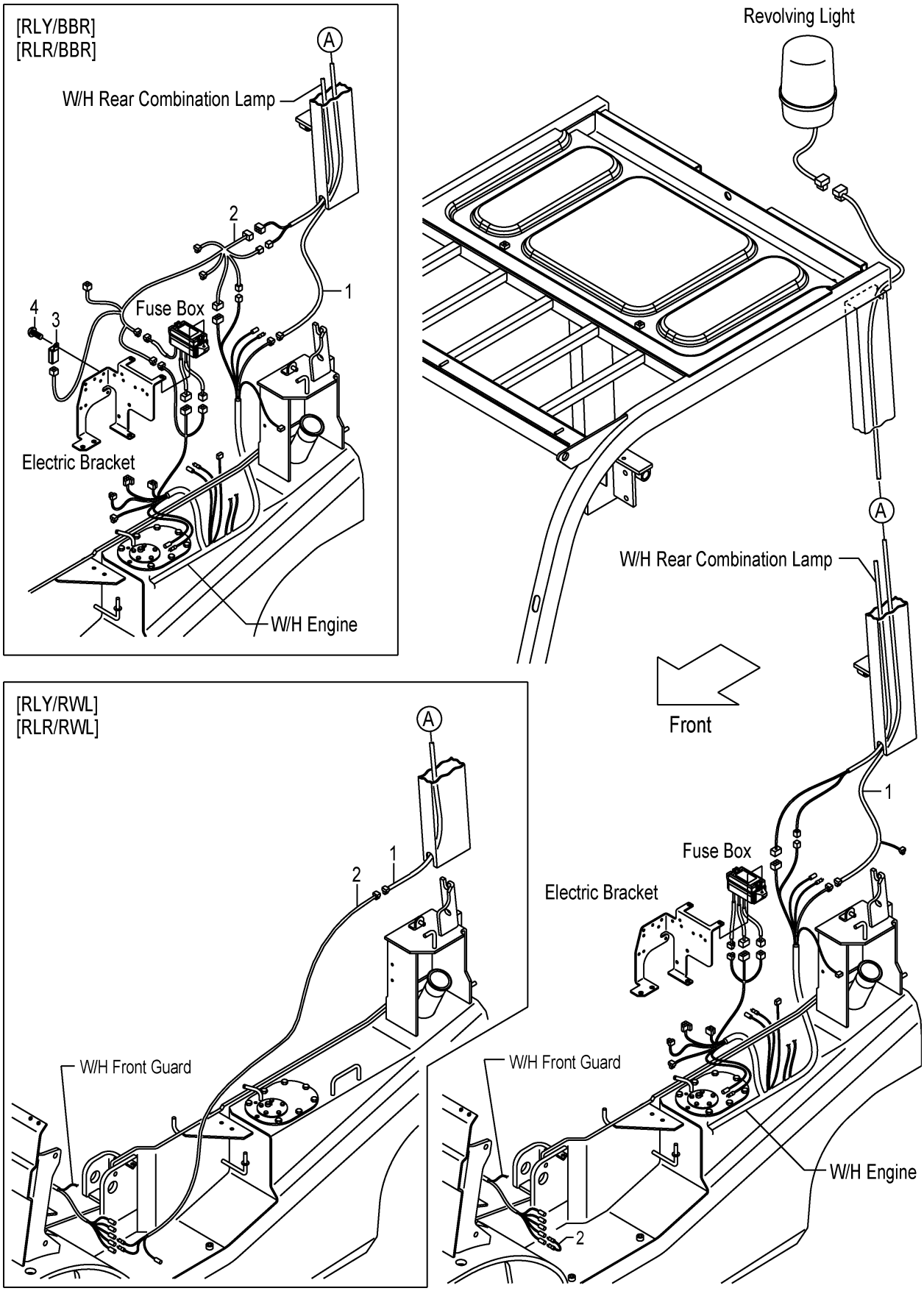

FIG.30

(F7Z124W0)

A:FHD15C3Z FHD15T3Z FHD18C3Z FHD18T3Z

Item No	Part No.	Mark	Description		Req'd	Remarks : Serial No.
1	52N58-92001		WIRE,LEAD	ﾜｲﾔ	1	[RLY][RLR]
-	52N58-92021		WIRE,LEAD	ﾜｲﾔ	1	[RLY/BBR][RLR/BBR][RLY/RWL] [RLR/RWL]
2	516G1-42211		WIRE,LEAD	ﾜｲﾔ	1	[RLY][RLR]
-	52N58-92112		WIRE-HARNESS,BBR	ﾜｲﾔﾊｰﾈｽ	1	[RLY/BBR][RLR/BBR]
-	52N58-92041		WIRE,LEAD	ﾜｲﾔ	1	[RLY/RWL][RLR/RWL]
3	209K2-42351		RELAY,12V	ﾘﾚｰ	1	[RLY/BBR][RLR/BBR]
4	214A2-42611		SCREW	ｽｸﾘｭ	1	[RLY/BBR][RLR/BBR]

FIG.31 SPOT LIGHT [SPL]

(F7Z12640) スポットライト

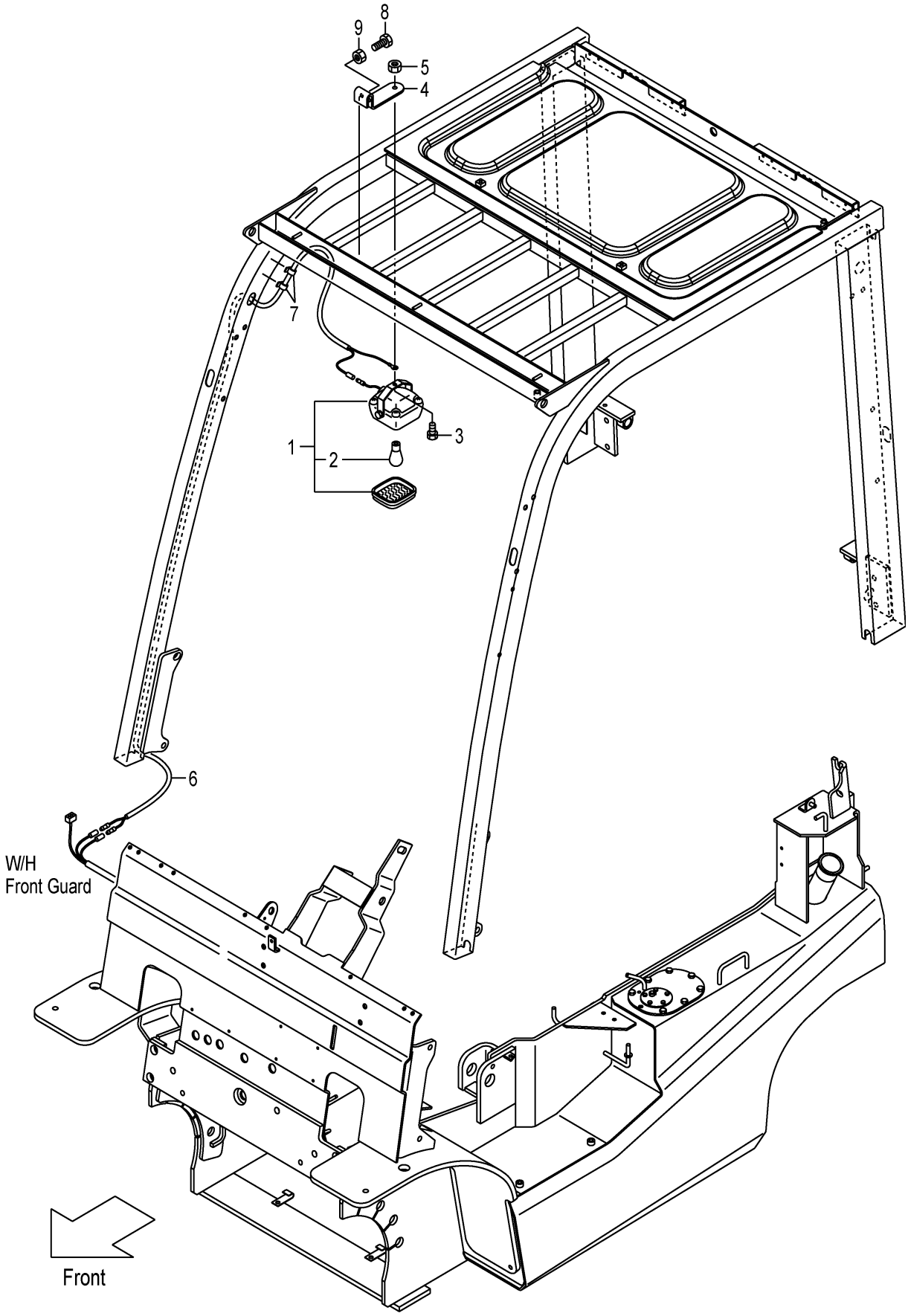

FIG.31

(F7Z12640)

A:FHD15C3Z FHD15T3Z FHD18C3Z FHD18T3Z

Item No	Part No.	Mark	Description		Req'd	Remarks : Serial No.
1	516G9-10101		LAMP-ASSY	ﾗﾝﾌﾟｱｯｾﾝ	1	[SPL] INC.2
2	516G9-12011		BULB,12V/18.2W	ﾊﾞﾙﾌﾞ	1	[SPL]
3	01185-08016		BOLT	ﾎﾞﾙﾄ	1	[SPL]
4	52N59-02001		BRACKET,SPOT-LAMP	ﾌﾞﾗｹｯﾄ	1	[SPL]
5	01400-00008		NUT	ﾅｯﾄ	1	[SPL]
6	539A9-02011		WIRE-HARNESS,SPOT-L.	ﾜｲﾔﾊｰﾈｽ	1	[SPL]
7	27732-42311		CLAMP,HARNESS	ｸﾗﾝﾌﾟ	2	[SPL]
8	01100-08025		BOLT	ﾎﾞﾙﾄ	2	[SPL]
9	01402-00008		NUT	ﾅｯﾄ	2	[SPL]

FIG.32 BACK BUZZER

(F7Z124X0) ﾊﾞｯｸﾌﾞｻﾞｰ

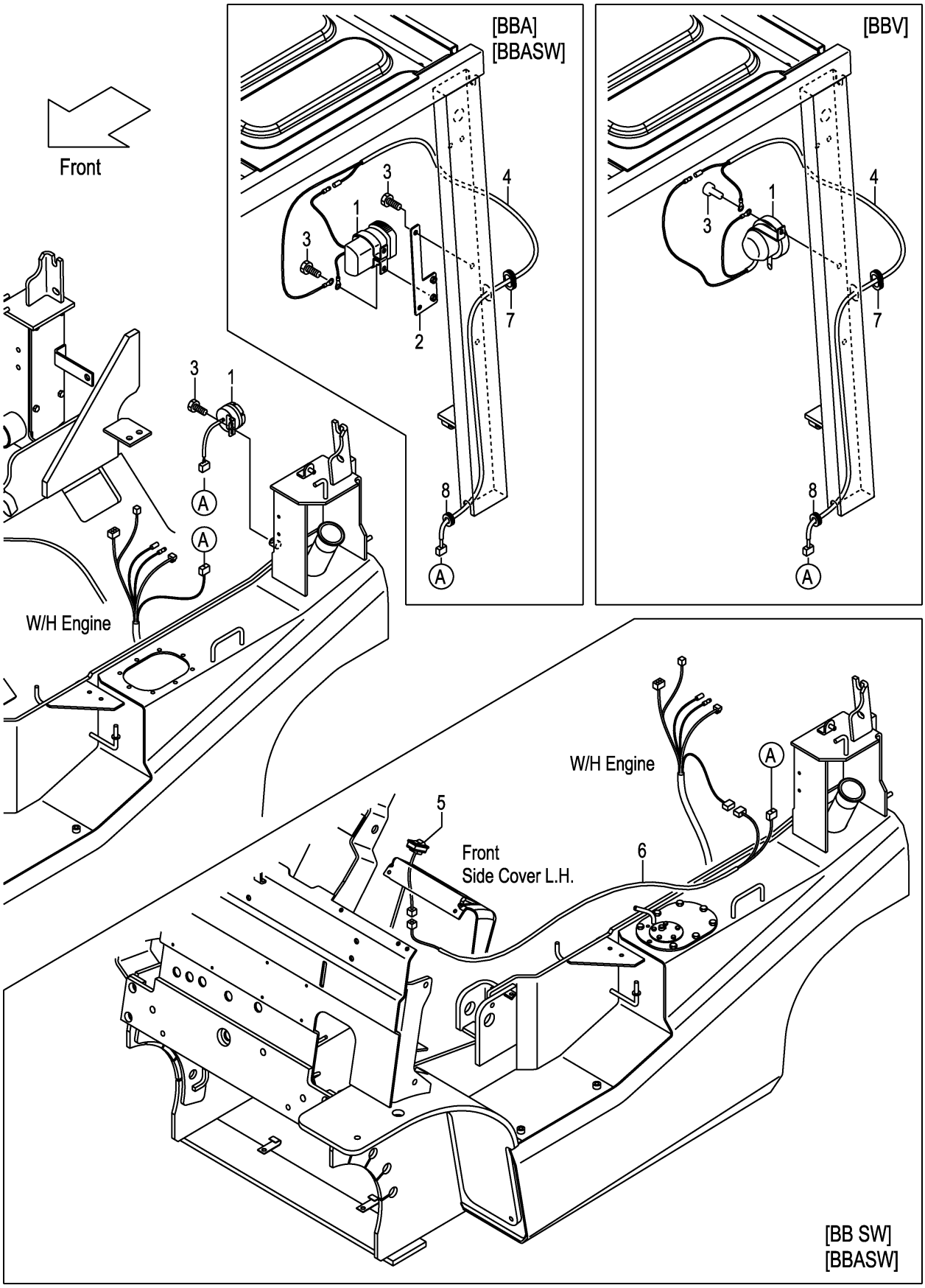

FIG.32

(F7Z124X0)

A:FHD15C3Z FHD15T3Z FHD18C3Z FHD18T3Z

Item No	Part No.	Mark	Description		Req'd	Remarks : Serial No.
1	234A2-42301		BUZZER,BACK,12V	ﾌﾞｻﾞｰ	1	
-	214A2-44001		BUZZER,BACK,12V	ﾌﾞｻﾞｰ	1	[BBA][BBASW]
-	52N51-30201		ALARM,VOICE	ｱﾗｰﾑ	1	[BBV]
2	50A71-31001		BRACKET,BBA	ﾌﾞﾗｹｯﾄ	1	[BBA][BBASW]
3	01183-08012		BOLT	ﾎﾞﾙﾄ	1	
-	01183-08016		BOLT	ﾎﾞﾙﾄ	4	[BBA][BBASW]
-	01185-08016		BOLT	ﾎﾞﾙﾄ	1	[BBSW]
-	01183-08016		BOLT	ﾎﾞﾙﾄ	1	[BBV]
4	52N51-32011		WIRE,LEAD	ﾜｲﾔ	1	[BBA][BBASW][BBV]
5	52N51-32101		SWITCH,ON/OFF	ｽｲｯﾁ	1	[BB SW][BBASW]
6	52N51-32001		WIRE,LEAD,BBSW	ﾜｲﾔ	1	[BB SW][BBASW]
7	54315-32561		GROMMET	ｸﾞﾛﾒｯﾄ	1	[BBA][BBASW][BBV]
8	27792-63381		GROMMET	ｸﾞﾛﾒｯﾄ	1	[BBA][BBASW][BBV]

FIG.33 HEATER UNIT [HR]

(F7Z124Y0) ヒータユニット

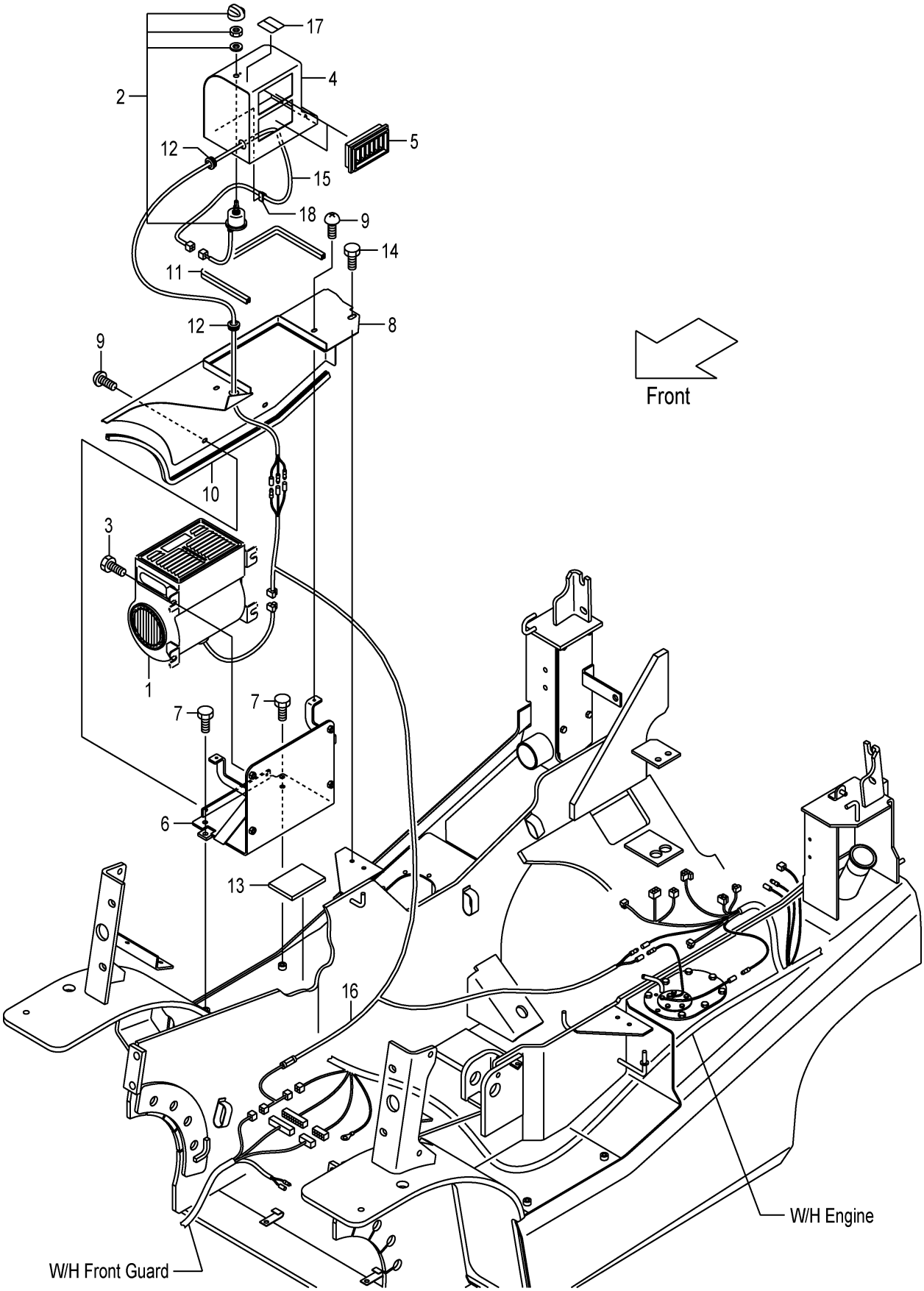

FIG.33

(F7Z124Y0)

A:FHD15C3Z FHD15T3Z FHD18C3Z FHD18T3Z

Item No	Part No.	Mark	Description		Req'd	Remarks : Serial No.
1	52N57-20301		UNIT,HEATER	ﾕﾆｯﾄ	1	[HR]
2	52N57-20311		SWITCH,HEATER	ｽｲｯﾁ	1	[HR]
3	01185-08020		BOLT	ﾎﾞﾙﾄ	4	[HR]
4	52N57-20201		DUCT	ﾀﾞｸﾄ	1	[HR]
5	25369-47031		GRILLE	ｸﾞﾘﾙ	2	[HR]
6	50A77-20221		BRACKET,HEATER	ﾌﾞﾗｹｯﾄ	1	[HR]
7	01183-08020		BOLT	ﾎﾞﾙﾄ	2	[HR]
8	50A77-20211		COVER,HEATER	ｶﾊﾞｰ	1	[HR]
9	214A6-42252		SCREW	ｽｸﾘｭ	4	[HR]
10	222A6-42381		EDGING	ｴｯｼﾞﾝｸﾞ	2	[HR]
11	256C5-12631		SEAL,RUBBER	ｼｰﾙ	1	[HR]
12	221A2-42031		GROMMET	ｸﾞﾛﾒｯﾄ	2	[HR]
13	239B2-42301		RUBBER	ﾗﾊﾞｰ	1	[HR]
14	01185-08016		BOLT	ﾎﾞﾙﾄ	1	[HR]
15	52N57-22231		WIRE-HARNESS,SWITCH	ﾜｲﾔﾊｰﾈｽ	1	[HR]
16	52N57-22241		WIRE-HARNESS,HEATER	ﾜｲﾔﾊｰﾈｽ	1	[HR]
17	52N57-22341		DECAL,HEATER-SWITCH	ﾃﾞｶﾙ	1	[HR]
18	27732-42311		CLAMP,HARNESS	ｸﾗﾝﾌﾟ	1	[HR]

FIG.34 HEATER VALVE & ELBOW [HR]

(F7Z124Z0) ﾋｰﾀﾊﾞﾙﾌﾞ&ｴﾙﾎﾞ

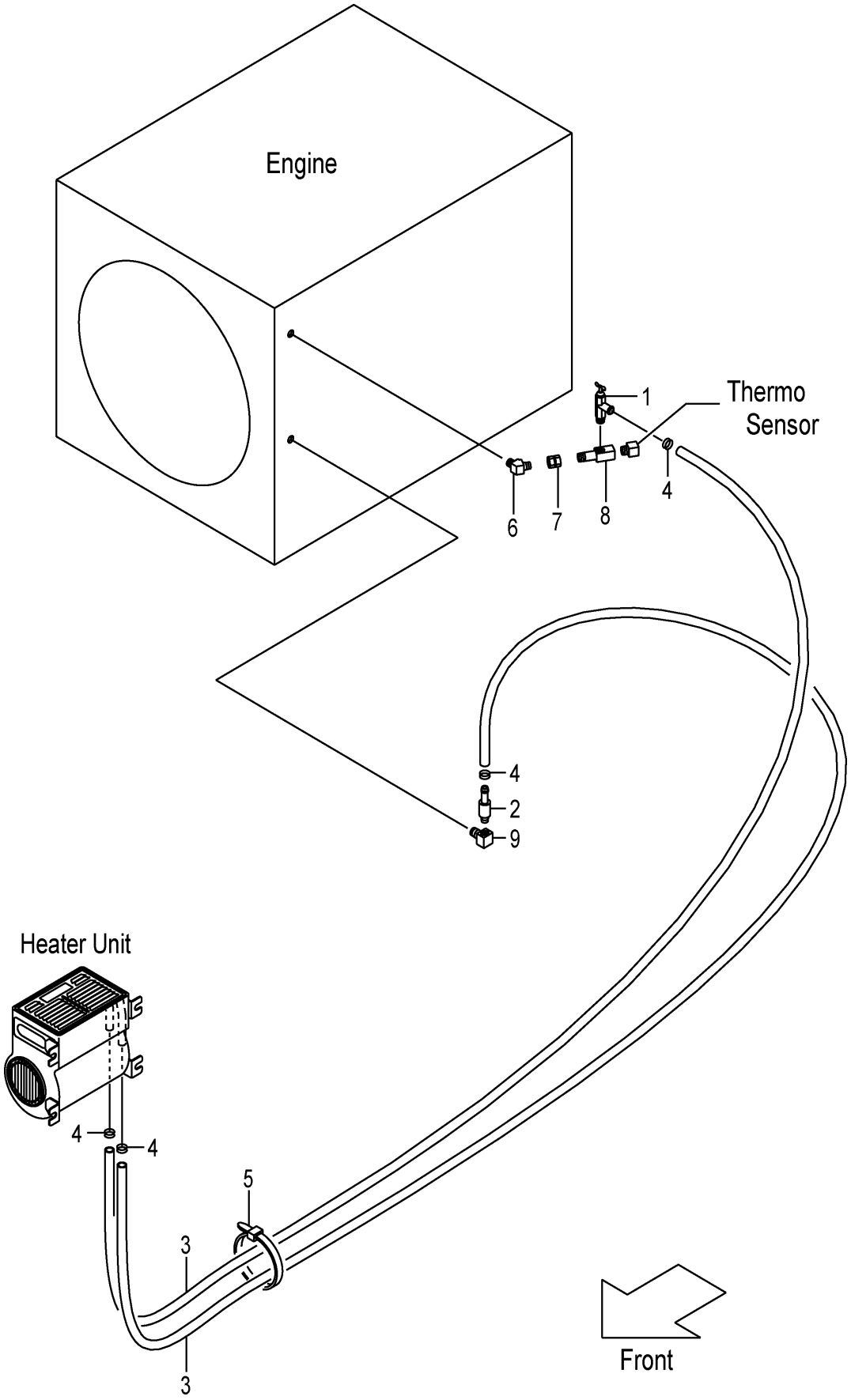

FIG.34

(F7Z124Z0)

A:FHD15C3Z FHD15T3Z FHD18C3Z FHD18T3Z

Item No	Part No.	Mark	Description		Req'd	Remarks : Serial No.
1	56110-63521		VALVE,WATER	ﾊﾞﾙﾌﾞ	1	[HR]
2	529F7-22001		ADAPTER	ｱﾀﾞﾌﾟﾀ	1	[HR]
3	522A7-22011		HOSE,WATER	ﾎｰｽ	2	[HR]
4	04911-00022		CLIP	ｸﾘｯﾌﾟ	4	[HR]
5	04913-11200		BAND	ﾊﾞﾝﾄﾞ	10	[HR]
6	53130-12091		ELBOW	ｴﾙﾎﾞ	1	[HR]
7	04138-00303		UNION	ﾕﾆｵﾝ	1	[HR]
8	55597-22111		ELBOW	ｴﾙﾎﾞ	1	[HR]
9	53030-52471		ELBOW	ｴﾙﾎﾞ	1	[HR]

FIG.35 FAN [FAN]

(F7Z12650) ファン

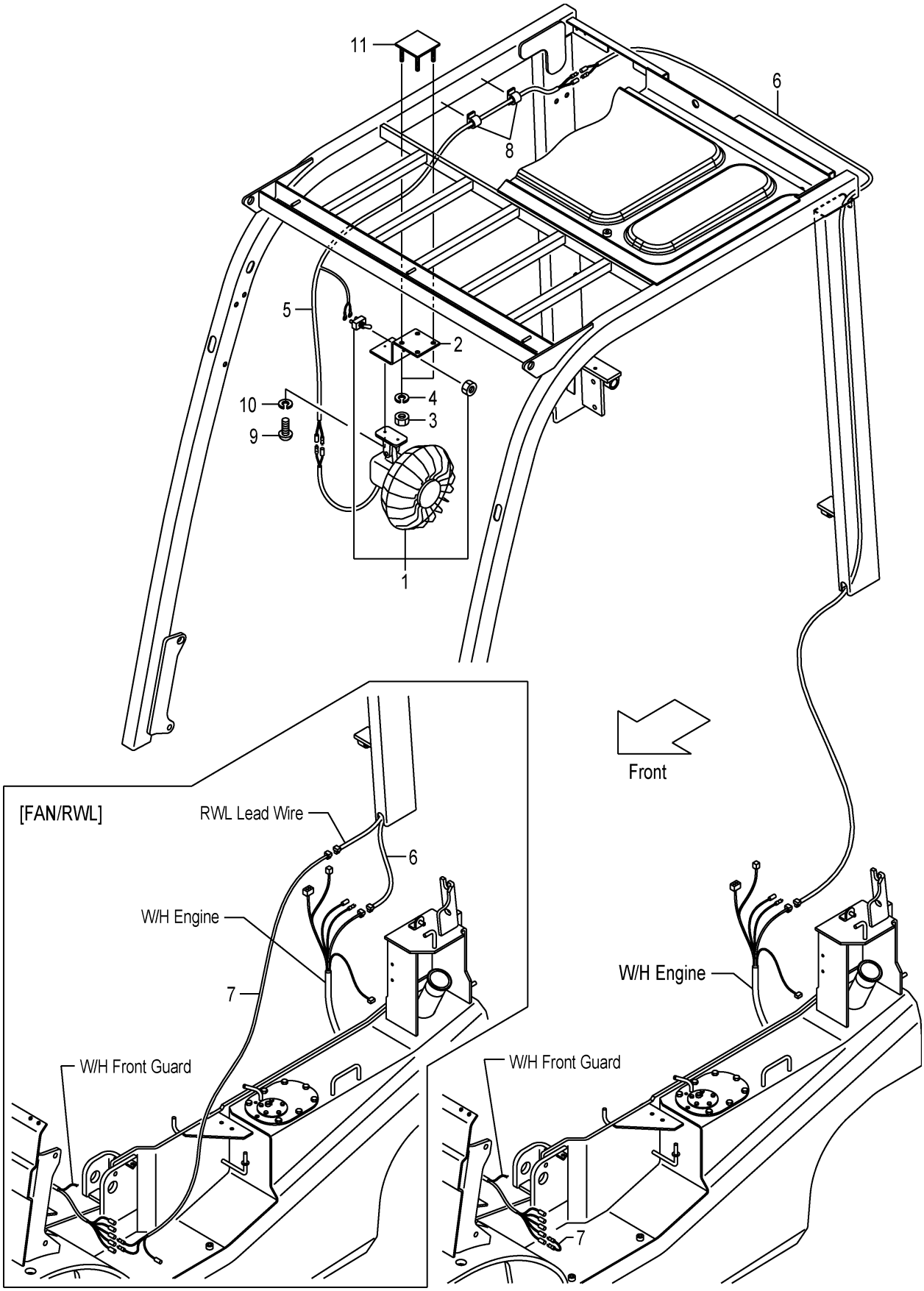

FIG.35

(F7Z12650)

A:FHD15C3Z FHD15T3Z FHD18C3Z FHD18T3Z

Item No	Part No.	Mark	Description		Req'd	Remarks : Serial No.
1	514A5-32341		FAN,CAR	ﾌｧﾝ	1	[FAN]
2	52N58-22001		BRACKET,FAN	ﾌﾞﾗｹｯﾄ	1	[FAN]
3	01400-00008		NUT	ﾅｯﾄ	4	[FAN]
4	02010-00008		WASHER	ﾜｯｼｬ	4	[FAN]
5	539A8-22151		WIRE-HARNESS,FAN	ﾜｲﾔﾊｰﾈｽ	1	[FAN]
6	516G1-42111		WIRE,LEAD	ﾜｲﾔ	1	[FAN]
7	516G1-42211		WIRE,LEAD	ﾜｲﾔ	1	[FAN]
-	52N58-92041		WIRE,LEAD	ﾜｲﾔ	1	[FAN/RWL]
8	27732-42311		CLAMP,HARNESS	ｸﾗﾝﾌﾟ	4	[FAN]
9	01030-04014		SCREW	ｽｸﾘｭ	2	[FAN]
10	02010-00004		WASHER	ﾜｯｼｬ	2	[FAN]
11	52N58-22101		BRACKET,FAN	ﾌﾞﾗｹｯﾄ	1	[FAN]

FIG.36 LIFT LOCK VALVE WIRE HARNESS [VLL]

(F7Z12660) ﾘﾌﾄﾛｯｸﾊﾞﾙﾌﾞﾜｲﾔﾊｰﾈｽ

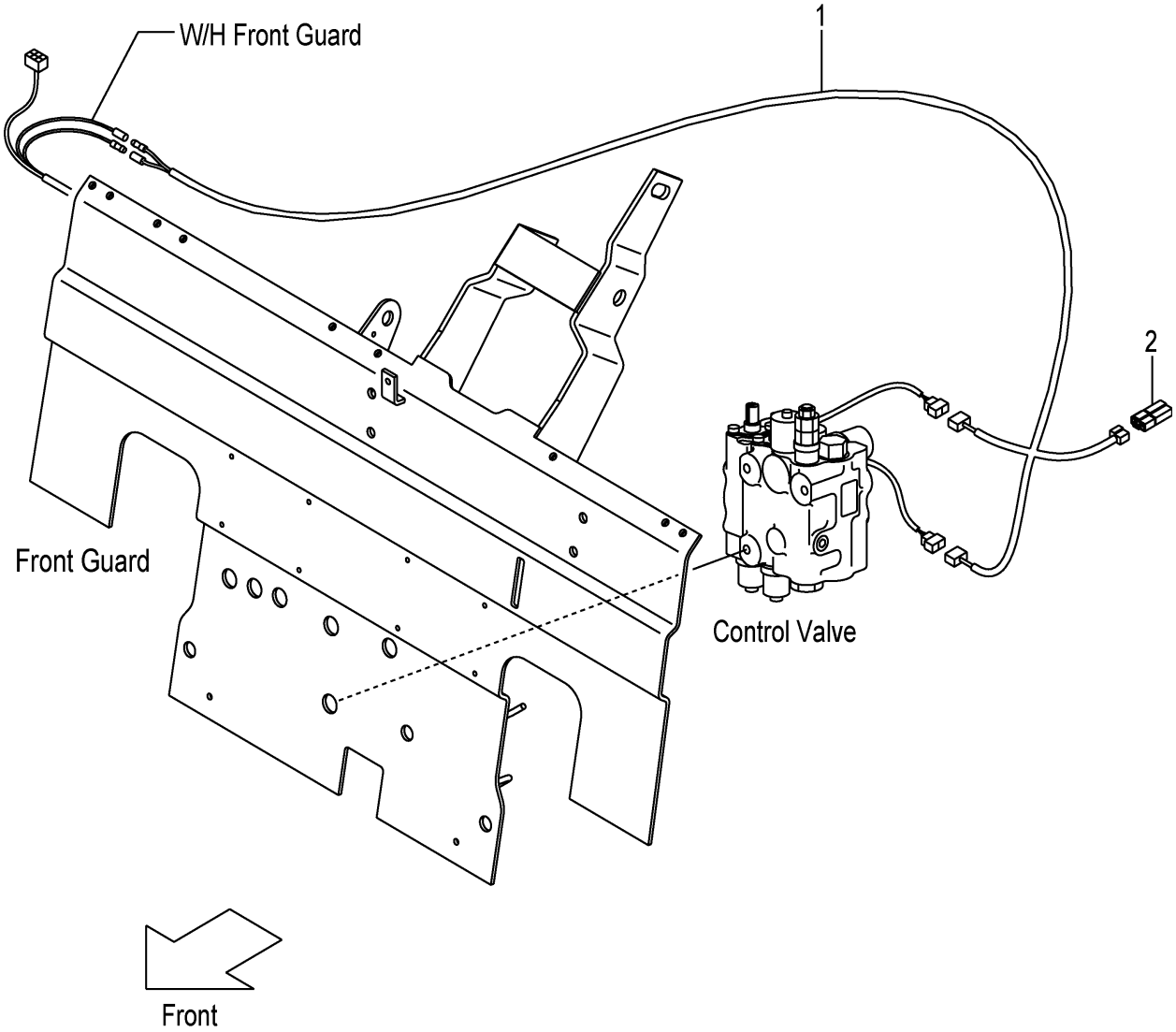

FIG.36

(F7Z12660)

A:FHD15C3Z FHD15T3Z FHD18C3Z FHD18T3Z

Item No	Part No.	Mark	Description	Req'd	Remarks : Serial No.
1	52N56-72001		WIRE-HARNESS,VLL ﾜｲﾔﾊｰﾈｽ	1	[VLL](WITHOUT VLL/SIL)
2	230C2-42201		DIODE,3A ﾀﾞｲｵｰﾄﾞ	1	[VLL](WITHOUT VLL/SIL)

FIG.37 AMMETER [AM]

(F7Z126A0) アンメータ

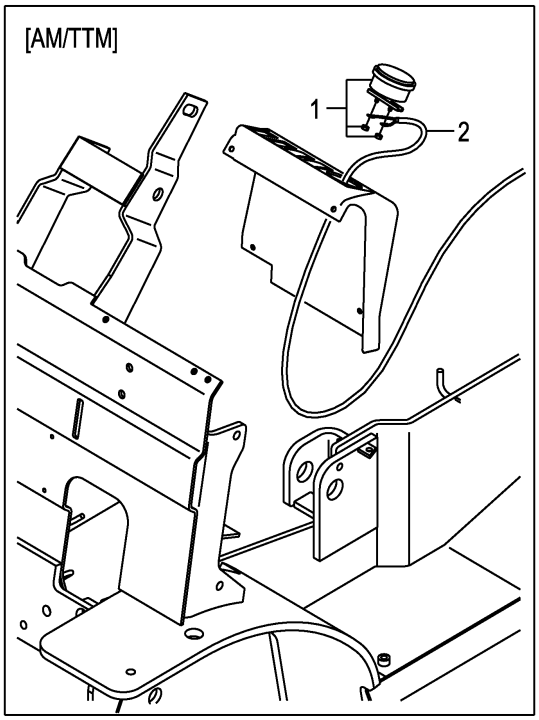

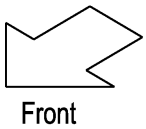

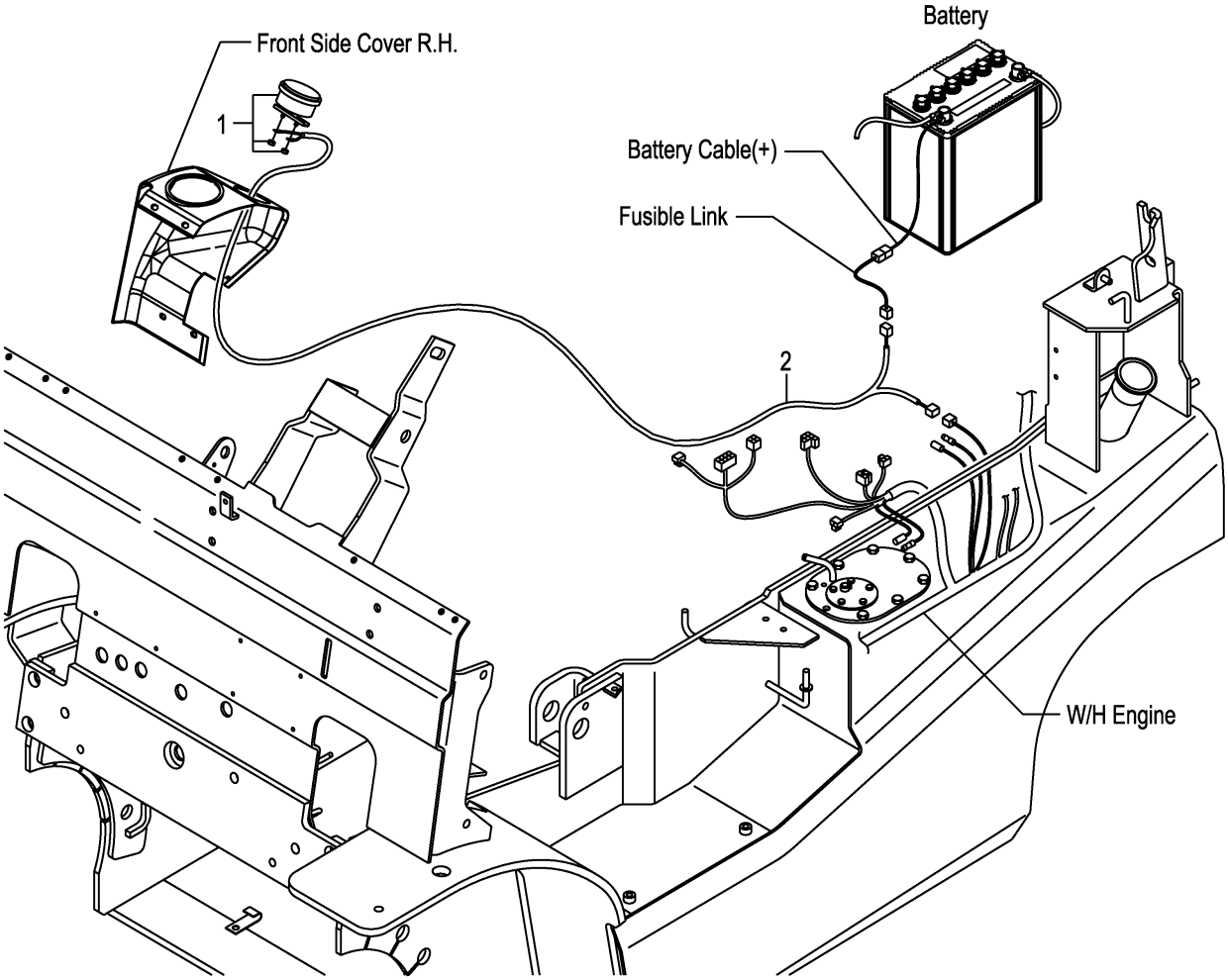

FIG.37

(F7Z126A0)

A:FHD15C3Z FHD15T3Z FHD18C3Z FHD18T3Z

Item No	Part No.	Mark	Description	Req'd	Remarks : Serial No.
1	3956323		AMMETER,50A ｱﾝﾒｰﾀ	1	[AM]
2	52N56-12051		WIRE,LEAD,AMMETER ﾜｲﾔ	1	[AM]

FIG.38 SPEED METER [SM]

(F7Z126B0) ｽﾋﾟｰﾄﾞﾒｰﾀ

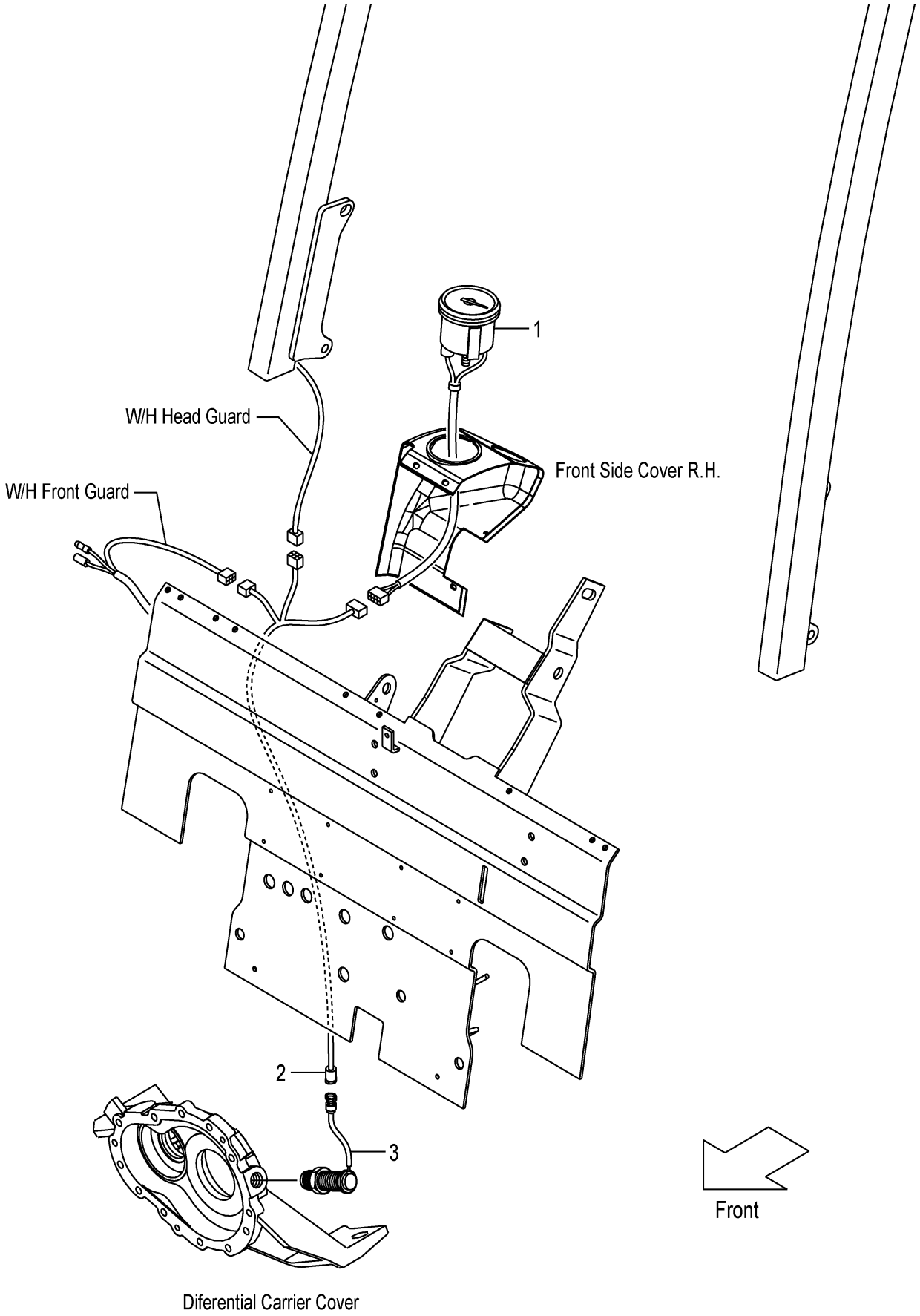

FIG.38

(F7Z126B0)

A:FHD15C3Z FHD15T3Z FHD18C3Z FHD18T3Z

Item No	Part No.	Mark	Description		Req'd	Remarks : Serial No.
1	50B77-50101		METER,SPEED	ﾒｰﾀ	1	[SM]
2	52N57-50301		WIRE-HARNESS,SM	ﾜｲﾔﾊｰﾈｽ	1	[SM]
3	16402-54331		SENSOR	ｾﾝｻ	1	[SM]

FIG.39 TORQUE CONVERTER THERMOMETER [TTM]

(F7Z126C0) トルクコンバータサーモメータ

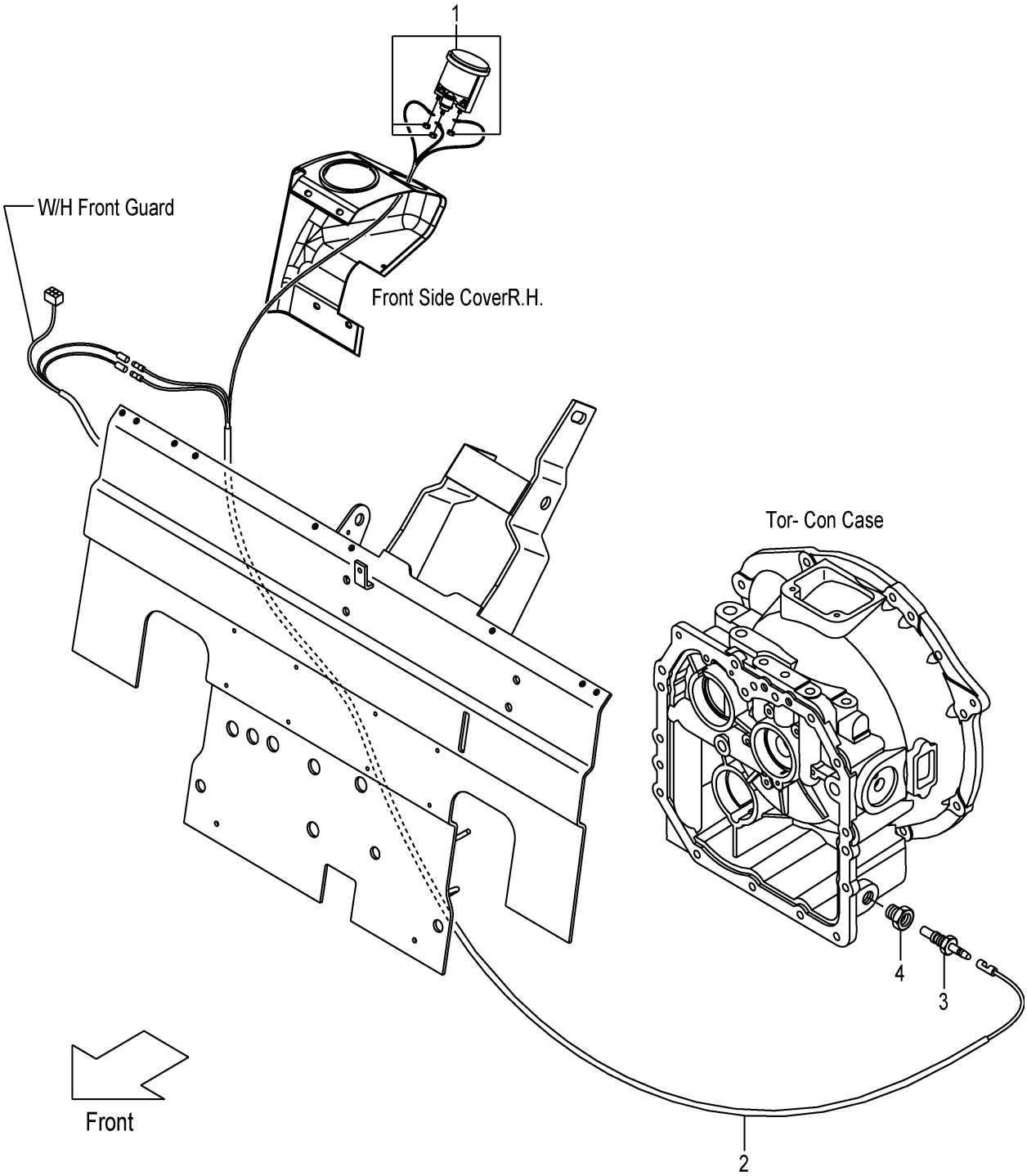

FIG.39

(F7Z126C0)

A:FHD15T3Z FHD18T3Z

Item No	Part No.	Mark	Description		Req'd	Remarks : Serial No.
1	52N58-82001		THERMOMETER	ｻｰﾓﾒｰﾀ	1	[TTM]
2	52N58-82101		WIRE-HARNESS,TTM	ﾜｲﾔﾊｰﾈｽ	1	[TTM]
3	23652-44001		UNIT,SENDING	ｾﾝﾃﾞｨﾝｸﾞﾕﾆｯﾄ	1	[TTM]
4	521A2-42061		ADAPTER,THERMO-SW.	ｱﾀﾞﾌﾟﾀ	1	[TTM]

FIG.40 TORQUE CONVERTER PRESSURE METER [TPM]

(F7Z126D0) トルクコンバータプレッシャメータ

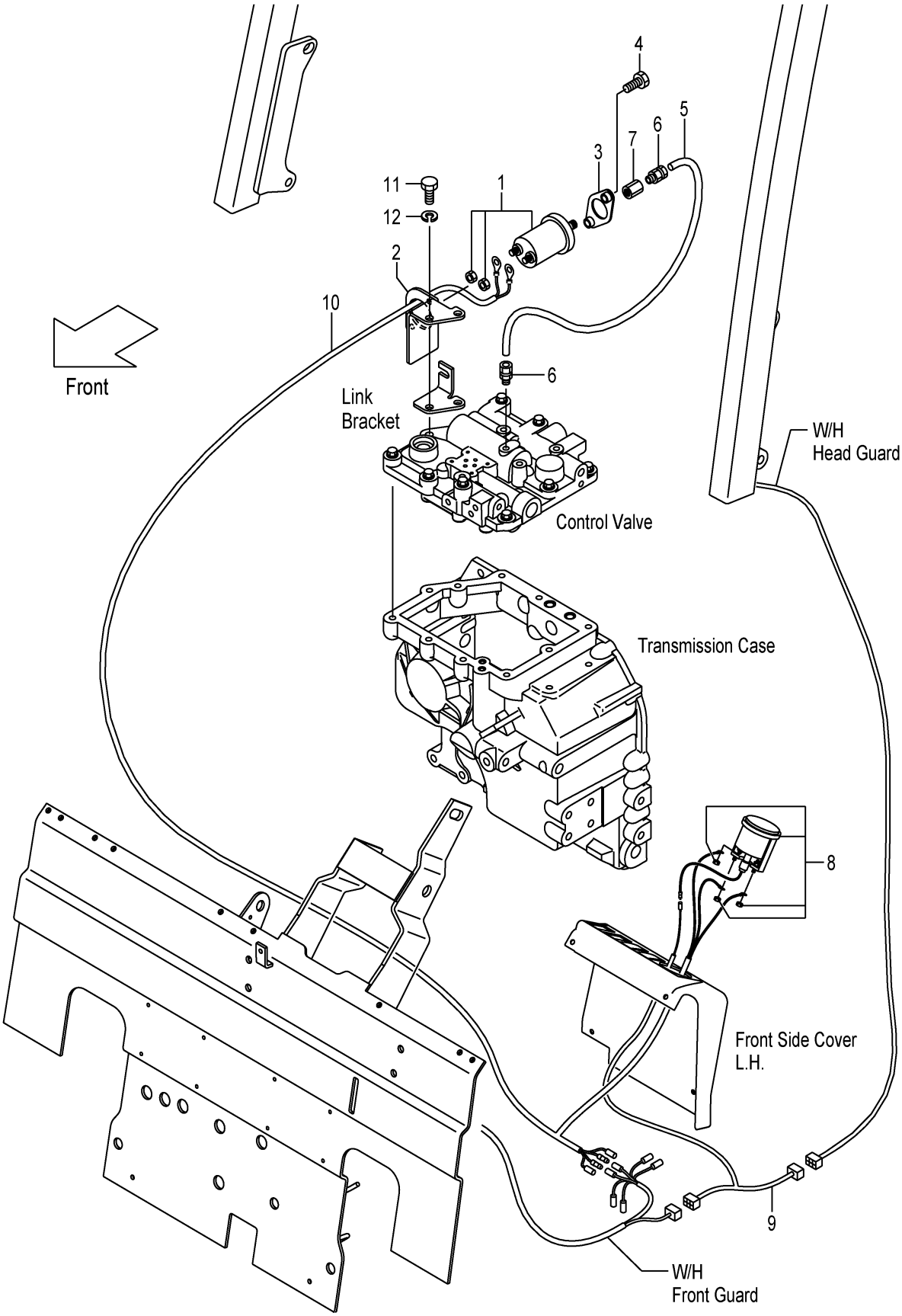

FIG.40
(F7Z126D0)

A:FHD15T3Z FHD18T3Z

Item No	Part No.	Mark	Description		Req'd	Remarks : Serial No.
1	516G6-92001		SENSOR,PRESS.GAUGE	ｾﾝｻ	1	[TPM]
2	52N56-92101		BRACKET,SENSOR	ﾌﾞﾗｹｯﾄ	1	[TPM]
3	516G6-92151		COVER,SENSOR	ｶﾊﾞｰ	1	[TPM]
4	01185-08025		BOLT	ﾎﾞﾙﾄ	2	[TPM]
5	52N56-92001		PIPE,CAPPER	ﾊﾟｲﾌﾟ	1	[TPM]
6	516G6-92011		JOINT	ｼﾞｮｲﾝﾄ	2	[TPM]
7	516G6-92031		ADAPTER	ｱﾀﾞﾌﾟﾀ	1	[TPM]
8	516G6-92022		GAUGE,PRESSURE	ｹﾞｰｼﾞ	1	[TPM]
9	52N56-92211		WIRE-HARNESS	ﾜｲﾔﾊｰﾈｽ	1	[TPM]
10	52N56-92201		WIRE-HARNESS,TPM	ﾜｲﾔﾊｰﾈｽ	1	[TPM]
11	01103-10035		BOLT	ﾎﾞﾙﾄ	2	[TPM]
12	02011-00010		WASHER	ﾜｯｼｬ	2	[TPM]

FIG.41 SPEED DETECTOR UNIT [SAS]

(F7Z126E0) ｽﾋﾟｰﾄﾞﾃﾞｨﾃｸﾀﾕﾆｯﾄ

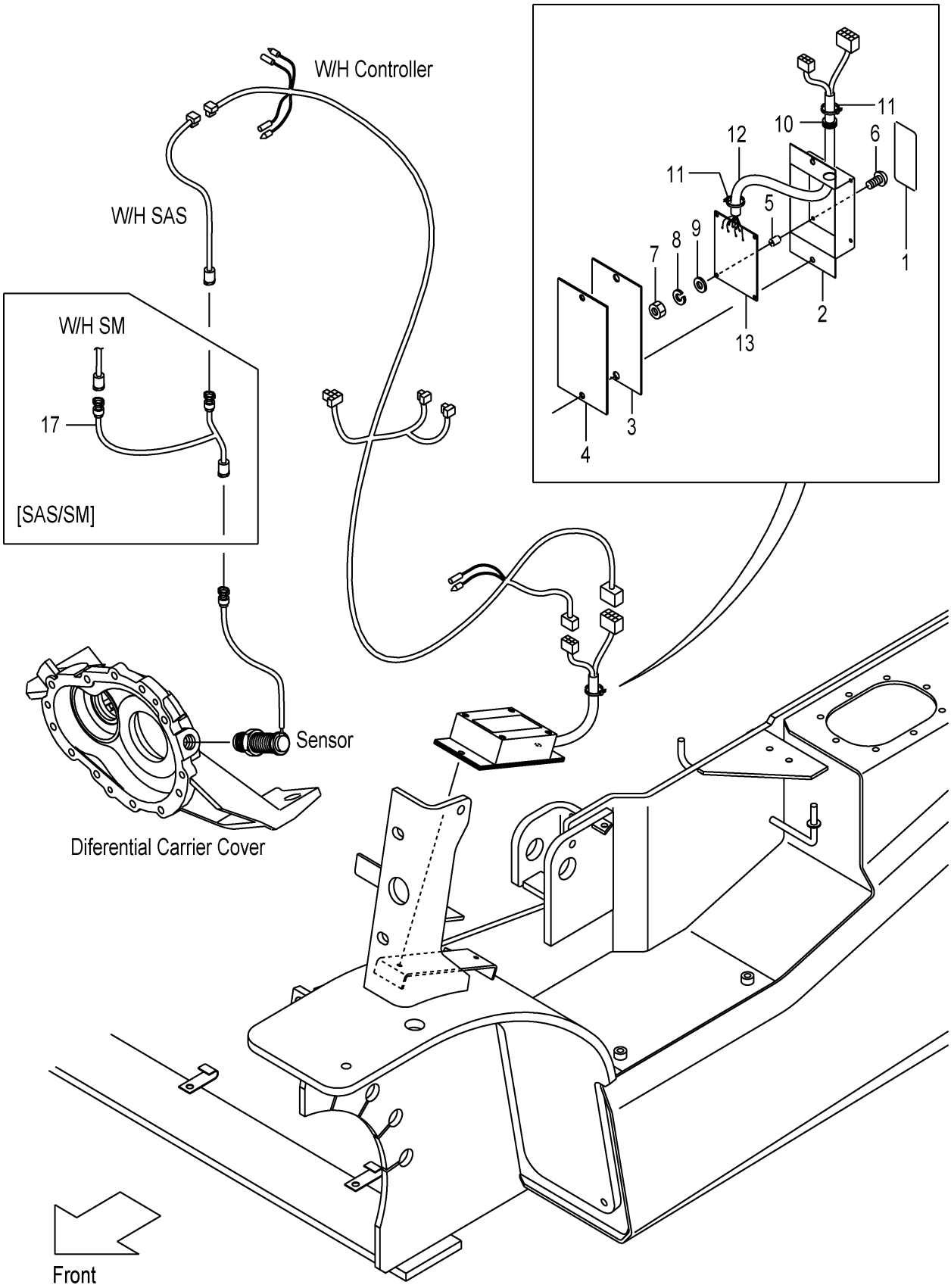

A:FHD15C3Z FHD15T3Z FHD18C3Z FHD18T3Z

Item No	Part No.	Mark	Description		Req'd	Remarks : Serial No.
A1	50B77-52051		UNIT-ASSY,SPEED-DETECTOR	ｽﾋﾟｰﾄﾞﾃﾞｨﾃｸﾀﾕﾆｯﾄｱｯｾﾝ	1	[SASB05][SASR05][SASC05] INC.1-16
-	50B77-52101		UNIT-ASSY,SPEED-DETECTOR	ｽﾋﾟｰﾄﾞﾃﾞｨﾃｸﾀﾕﾆｯﾄｱｯｾﾝ	1	[SASB10][SASR10][SASC10] INC.1-16
-	50B77-52151		UNIT-ASSY,SPEED-DETECTOR	ｽﾋﾟｰﾄﾞﾃﾞｨﾃｸﾀﾕﾆｯﾄｱｯｾﾝ	1	[SASB15][SASR15][SASC15] INC.1-16
1	50B77-52061		PLATE,NAME	ﾌﾟﾚｰﾄ	1	[SASB05][SASR05][SASC05]
-	50B77-52111		PLATE,NAME	ﾌﾟﾚｰﾄ	1	[SASB10][SASR10][SASC10]
-	50B77-52161		PLATE,NAME	ﾌﾟﾚｰﾄ	1	[SASB15][SASR15][SASC15]
2	55792-52601		CASE	ｹｰｽ	1	[SASB05&10&15][SASR05&10&15] [SASC05&10&15]
3	55792-52611		SEAT,SPONG	ｼｰﾄ	1	[SASB05&10&15][SASR05&10&15] [SASC05&10&15]
4	55792-52621		PLATE	ﾌﾟﾚｰﾄ	1	[SASB05&10&15][SASR05&10&15] [SASC05&10&15]
5	27042-64311		SPACER	ｽﾍﾟｰｻ	4	[SASB05&10&15][SASR05&10&15] [SASC05&10&15]
6	01030-04020		SCREW	ｽｸﾘｭ	4	[SASB05&10&15][SASR05&10&15] [SASC05&10&15]
7	01400-00004		NUT	ﾅｯﾄ	4	[SASB05&10&15][SASR05&10&15] [SASC05&10&15]
8	02010-00004		WASHER	ﾜｯｼｬ	4	[SASB05&10&15][SASR05&10&15] [SASC05&10&15]
9	02000-00004		WASHER	ﾜｯｼｬ	4	[SASB05&10&15][SASR05&10&15] [SASC05&10&15]
10	205A2-63311		GROMMET	ｸﾞﾛﾒｯﾄ	1	[SASB05&10&15][SASR05&10&15] [SASC05&10&15]
11	27042-42312		BAND,CABLE	ﾊﾞﾝﾄﾞ	2	[SASB05&10&15][SASR05&10&15] [SASC05&10&15]
12	55792-52641		WIRE-HARNESS,ATC	ﾜｲﾔﾊｰﾈｽ	1	[SASB05&10&15][SASR05&10&15] [SASC05&10&15]
13	130C2-60302		BOARD,PRINTED	ﾎﾞｰﾄﾞ	1	[SASB05&10&15][SASR05&10&15] [SASC05&10&15]
14	01100-06020	+	BOLT	ﾎﾞﾙﾄ	2	[SASB05&10&15][SASR05&10&15] [SASC05&10&15]
15	02010-00006	+	WASHER	ﾜｯｼｬ	2	[SASB05&10&15][SASR05&10&15] [SASC05&10&15]
16	01400-00006	+	NUT	ﾅｯﾄ	2	[SASB05&10&15][SASR05&10&15] [SASC05&10&15]
17	539A7-52041		WIRE-HARNESS,SAS/SM	ﾜｲﾔﾊｰﾈｽ	1	[SAS/SM]

FIG.42 SPEED ALARM SYSTEM [SASB]

(F7Z126F0) ｽﾋﾟｰﾄﾞｱﾗｰﾑｼｽﾃﾑ

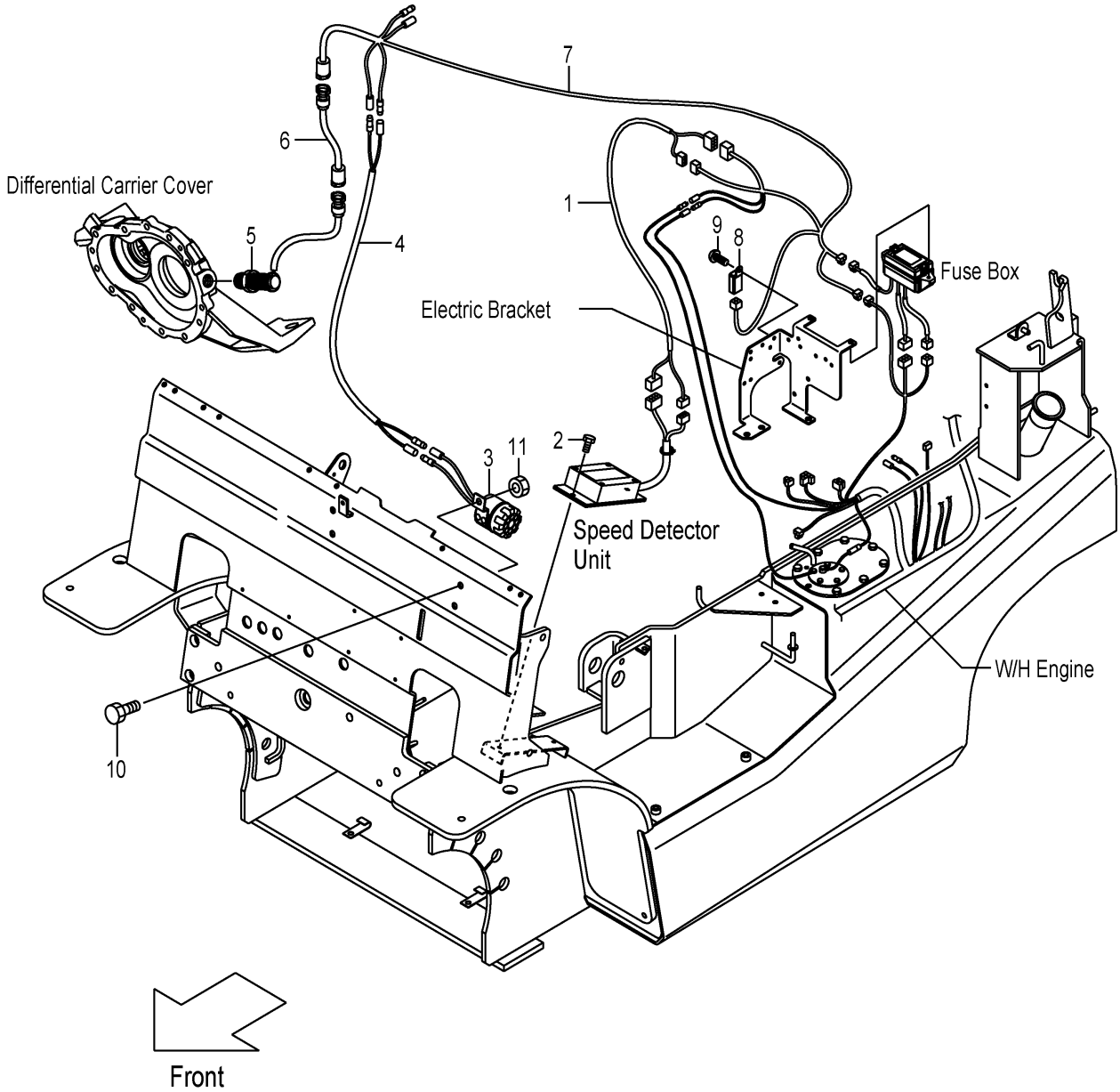

FIG.42

(F7Z126F0)

A:FHD15C3Z FHD15T3Z FHD18C3Z FHD18T3Z

Item No	Part No.	Mark	Description		Req'd	Remarks : Serial No.
1	50B77-52301		WIRE,LEAD,SAS	ﾜｲﾔ	1	[SASB05][SASB10][SASB15]
2	01183-06012		BOLT	ﾎﾞﾙﾄ	2	[SASB05][SASB10][SASB15]
3	529F7-52241		ALARM,BUZZER	ｱﾗｰﾑ	1	[SASB05][SASB10][SASB15]
4	558A9-92001		WIRE-HARNESS,LICENSE	ﾜｲﾔﾊｰﾈｽ	1	[SASB05][SASB10][SASB15]
5	16402-54331		SENSOR	ｾﾝｻ	1	[SASB05][SASB10][SASB15]
6	534A7-50601		WIRE-HARNESS,SAS	ﾜｲﾔﾊｰﾈｽ	1	[SASB05][SASB10][SASB15]
7	52N57-52032		WIRE-HARNESS,CONTROL	ﾜｲﾔﾊｰﾈｽ	1	[SASB05][SASB10][SASB15]
8	209K2-42351		RELAY,12V	ﾘﾚｰ	1	[SASB05][SASB10][SASB15]
9	214A2-42621		SCREW	ｽｸﾘｭ	1	[SASB05][SASB10][SASB15]
10	514A5-12021		BOLT	ﾎﾞﾙﾄ	1	[SASB05][SASB10][SASB15]
11	01400-00008		NUT	ﾅｯﾄ	1	[SASB05][SASB10][SASB15]

FIG.43 SPEED ALARM SYSTEM [SASR]

(F7Z126G0) スピードアラームシステム

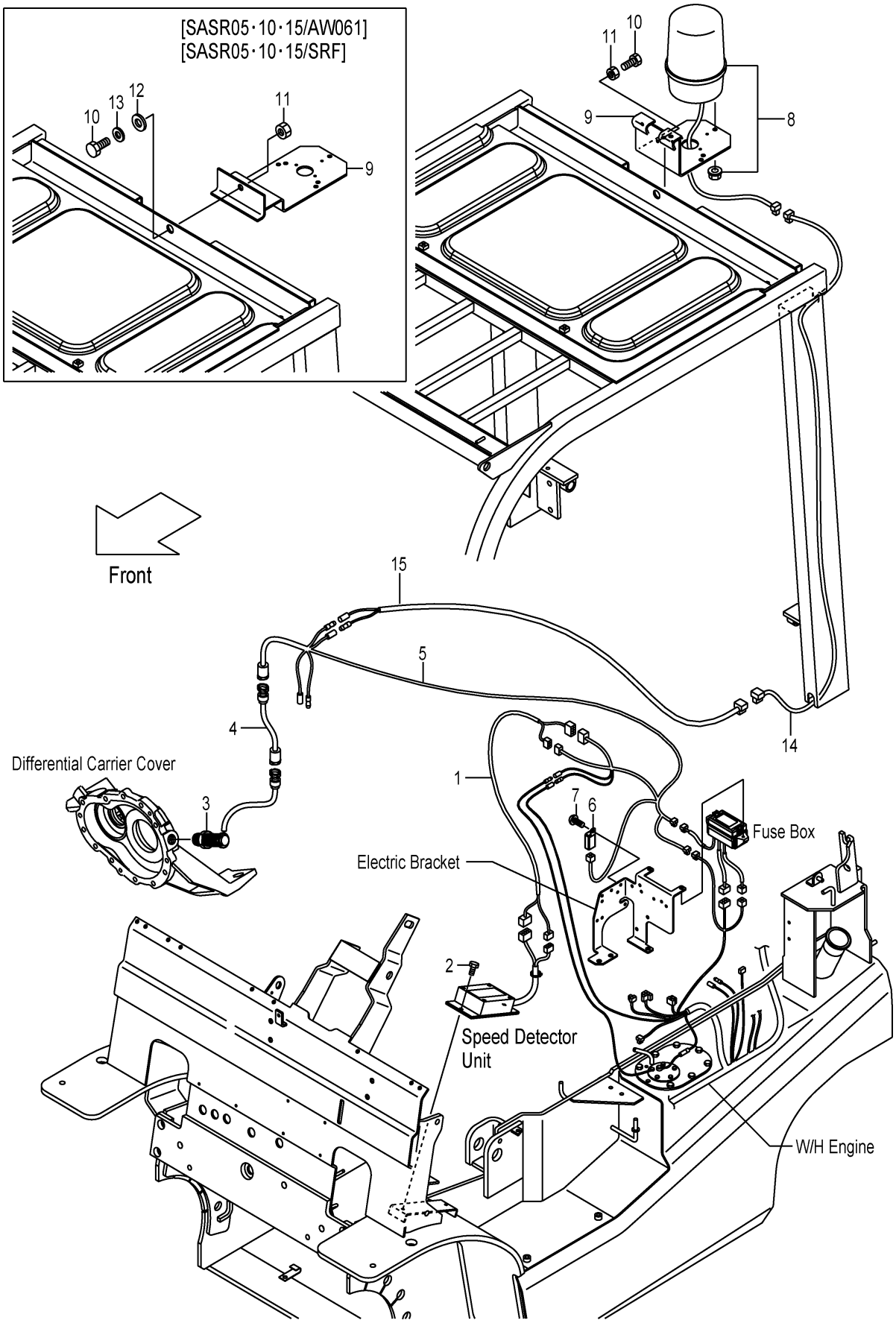

A:FHD15C3Z FHD15T3Z FHD18C3Z FHD18T3Z

Item No	Part No.	Mark	Description		Req'd	Remarks : Serial No.
1	50B77-52301		WIRE,LEAD,SAS	ﾜｲﾔ	1	[SASR05][SASR10][SASR15]
2	01183-06012		BOLT	ﾎﾞﾙﾄ	2	[SASR05][SASR10][SASR15]
3	16402-54331		SENSOR	ｾﾝｻ	1	[SASR05][SASR10][SASR15]
4	534A7-50601		WIRE-HARNESS,SAS	ﾜｲﾔﾊｰﾈｽ	1	[SASR05][SASR10][SASR15]
5	52N57-52032		WIRE-HARNESS,CONTROL	ﾜｲﾔﾊｰﾈｽ	1	[SASR05][SASR10][SASR15]
6	209K2-42351		RELAY,12V	ﾘﾚｰ	1	[SASR05][SASR10][SASR15]
7	214A2-42621		SCREW	ｽｸﾘｭ	1	[SASR05][SASR10][SASR15]
8	514A1-41001		LIGHT,REVOLVING	ﾗｲﾄ	1	[SASR05][SASR10][SASR15]
9	529F1-42251		BRACKET,REVOLVING	ﾌﾞﾗｹｯﾄ	1	[SASR05][SASR10][SASR15]
-	50A78-92201		BRACKET,REVOLVING	ﾌﾞﾗｹｯﾄ	1	[SASR05/AW061][SASR10/AW061] [SASR15/AW061]
-	50A78-92201		BRACKET,REVOLVING	ﾌﾞﾗｹｯﾄ	1	[SASR05/SRF][SASR10/SRF] [SASR15/SRF]
10	01100-08020		BOLT	ﾎﾞﾙﾄ	3	[SASR05][SASR10][SASR15]
-	01186-12030		BOLT	ﾎﾞﾙﾄ	1	[SASR05/AW061][SASR10/AW061] [SASR15/AW061]
-	01186-12030		BOLT	ﾎﾞﾙﾄ	1	[SASR05/SRF][SASR10/SRF] [SASR15/SRF]
11	01400-00008		NUT	ﾅｯﾄ	3	[SASR05][SASR10][SASR15]
-	01400-00012		NUT	ﾅｯﾄ	1	[SASR05/AW061][SASR10/AW061] [SASR15/AW061]
-	01400-00012		NUT	ﾅｯﾄ	1	[SASR05/SRF][SASR10/SRF] [SASR15/SRF]
12	02000-00014		WASHER	ﾜｯｼｬ	1	[SASR05/AW061][SASR10/AW061] [SASR15/AW061]
-	02000-00014		WASHER	ﾜｯｼｬ	1	[SASR05/SRF][SASR10/SRF] [SASR15/SRF]
13	02000-00012		WASHER	ﾜｯｼｬ	1	[SASR05/AW061][SASR10/AW061] [SASR15/AW061]
-	02000-00012		WASHER	ﾜｯｼｬ	1	[SASR05/SRF][SASR10/SRF] [SASR15/SRF]
14	52N58-92021		WIRE,LEAD	ﾜｲﾔ	1	[SASR05][SASR10][SASR15]
15	539A7-52101		WIRE,LEAD	ﾜｲﾔ	1	[SASR05][SASR10][SASR15]

FIG.44 SPEED ALARM SYSTEM [SASC]

(F7Z126H0) スピードアラームシステム

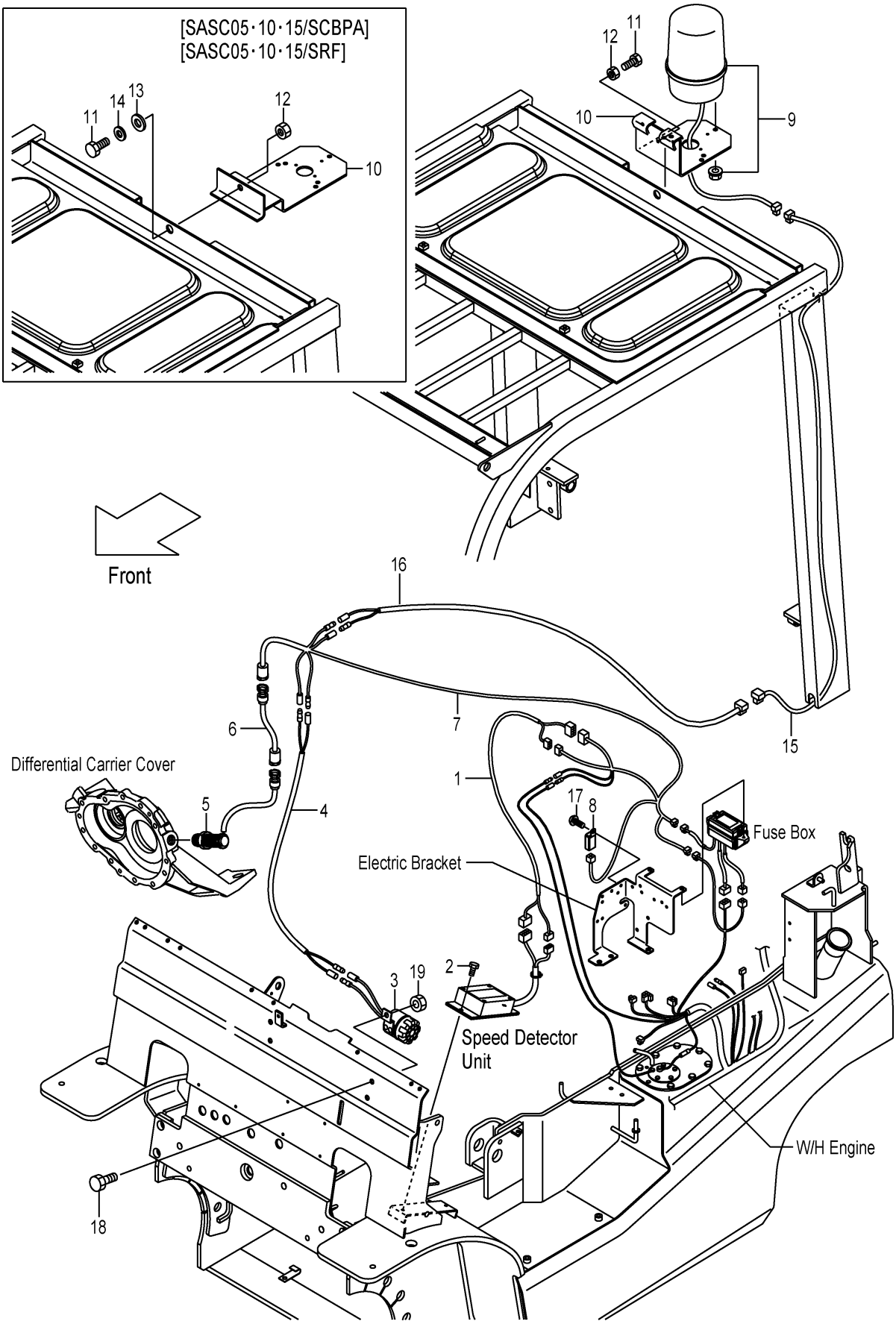

A:FHD15C3Z FHD15T3Z FHD18C3Z FHD18T3Z

Item No	Part No.	Mark	Description		Req'd	Remarks : Serial No.
1	50B77-52301		WIRE,LEAD,SAS	ﾜｲﾔ	1	[SASC05][SASC10][SASC15]
2	01183-06012		BOLT	ﾎﾞﾙﾄ	2	[SASC05][SASC10][SASC15]
3	529F7-52241		ALARM,BUZZER	ｱﾗｰﾑ	1	[SASC05][SASC10][SASC15]
4	558A9-92001		WIRE-HARNESS,LICENSE	ﾜｲﾔﾊｰﾈｽ	1	[SASC05][SASC10][SASC15]
5	16402-54331		SENSOR	ｾﾝｻ	1	[SASC05][SASC10][SASC15]
6	534A7-50601		WIRE-HARNESS,SAS	ﾜｲﾔﾊｰﾈｽ	1	[SASC05][SASC10][SASC15]
7	52N57-52032		WIRE-HARNESS,CONTROL	ﾜｲﾔﾊｰﾈｽ	1	[SASC05][SASC10][SASC15]
8	209K2-42351		RELAY,12V	ﾘﾚｰ	1	[SASC05][SASC10][SASC15]
9	514A1-41001		LIGHT,REVOLVING	ﾗｲﾄ	1	[SASC05][SASC10][SASC15]
10	529F1-42251		BRACKET,REVOLVING	ﾌﾞﾗｹｯﾄ	1	[SASC05][SASC10][SASC15]
-	50A78-92201		BRACKET,REVOLVING	ﾌﾞﾗｹｯﾄ	1	[SASC05/SCBPA][SASC10/SCBPA] [SASC15/SCBPA]
11	01100-08020		BOLT	ﾎﾞﾙﾄ	3	[SASC05][SASC10][SASC15]
-	01186-12030		BOLT	ﾎﾞﾙﾄ	1	[SASC05/SCBPA][SASC10/SCBPA] [SASC15/SCBPA]
12	01400-00008		NUT	ﾅｯﾄ	3	[SASC05][SASC10][SASC15]
-	01400-00012		NUT	ﾅｯﾄ	1	[SASC05/SCBPA][SASC10/SCBPA] [SASC15/SCBPA]
13	02000-00014		WASHER	ﾜｯｼｬ	1	[SASC05/SCBPA][SASC10/SCBPA] [SASC15/SCBPA]
14	02000-00012		WASHER	ﾜｯｼｬ	1	[SASC05/SCBPA][SASC10/SCBPA] [SASC15/SCBPA]
15	52N58-92021		WIRE,LEAD	ﾜｲﾔ	1	[SASC05][SASC10][SASC15]
16	539A7-52101		WIRE,LEAD	ﾜｲﾔ	1	[SASC05][SASC10][SASC15]
17	214A2-42621		SCREW	ｽｸﾘｭ	1	[SASC05][SASC10][SASC15]
18	514A5-12021		BOLT	ﾎﾞﾙﾄ	1	[SASC05][SASC10][SASC15]
19	01400-00008		NUT	ﾅｯﾄ	1	[SASC05][SASC10][SASC15]

FIG.45 OK MONITOR [OKM]

(F7Z126J0) **OKモニタ**

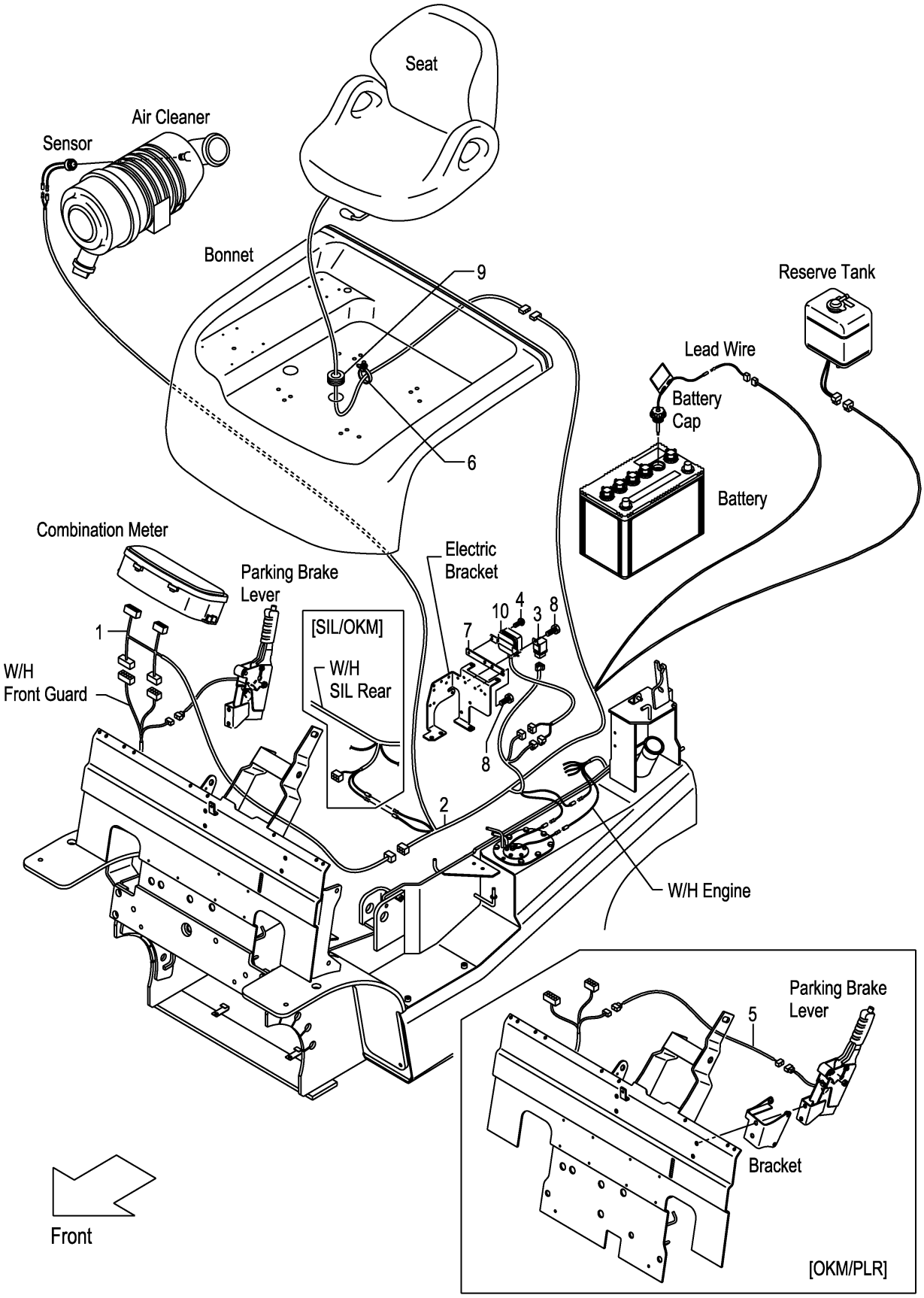

FIG.45

(F7Z126J0)

A:FHD15C3Z FHD15T3Z FHD18C3Z FHD18T3Z

Item No	Part No.	Mark	Description		Req'd	Remarks : Serial No.
1	52N56-22021		WIRE,LEAD,OKM	ﾜｲﾔ	1	[OKM]
2	52N56-22012		WIRE-HARNESS,OKM	ﾜｲﾔﾊｰﾈｽ	1	[OKM]
3	247C2-43501		RELAY,1C	ﾘﾚｰ	1	[OKM]
4	214A2-42611		SCREW	ｽｸﾘｭ	1	[OKM]
5	52N56-22401		WIRE-HARNESS,SWITCH	ﾜｲﾔﾊｰﾈｽ	1	[OKM/PLR]
6	22N52-42151		BAND	ﾊﾞﾝﾄﾞ	1	[OKM]
7	52N56-22101		BRACKET,MODULE	ﾌﾞﾗｹｯﾄ	1	[OKM]
8	214A2-42621		SCREW	ｽｸﾘｭ	2	[OKM]
9	27682-62131		GROMMET	ｸﾞﾛﾒｯﾄ	1	[OKM]
10	229F2-42161		MODULE,WARNING	ﾓｼﾞｭｰﾙ	1	[OKM]

FIG.46 INTERLOCK (CLUTCH):[SIL]

(F7Z126K0) インターロック

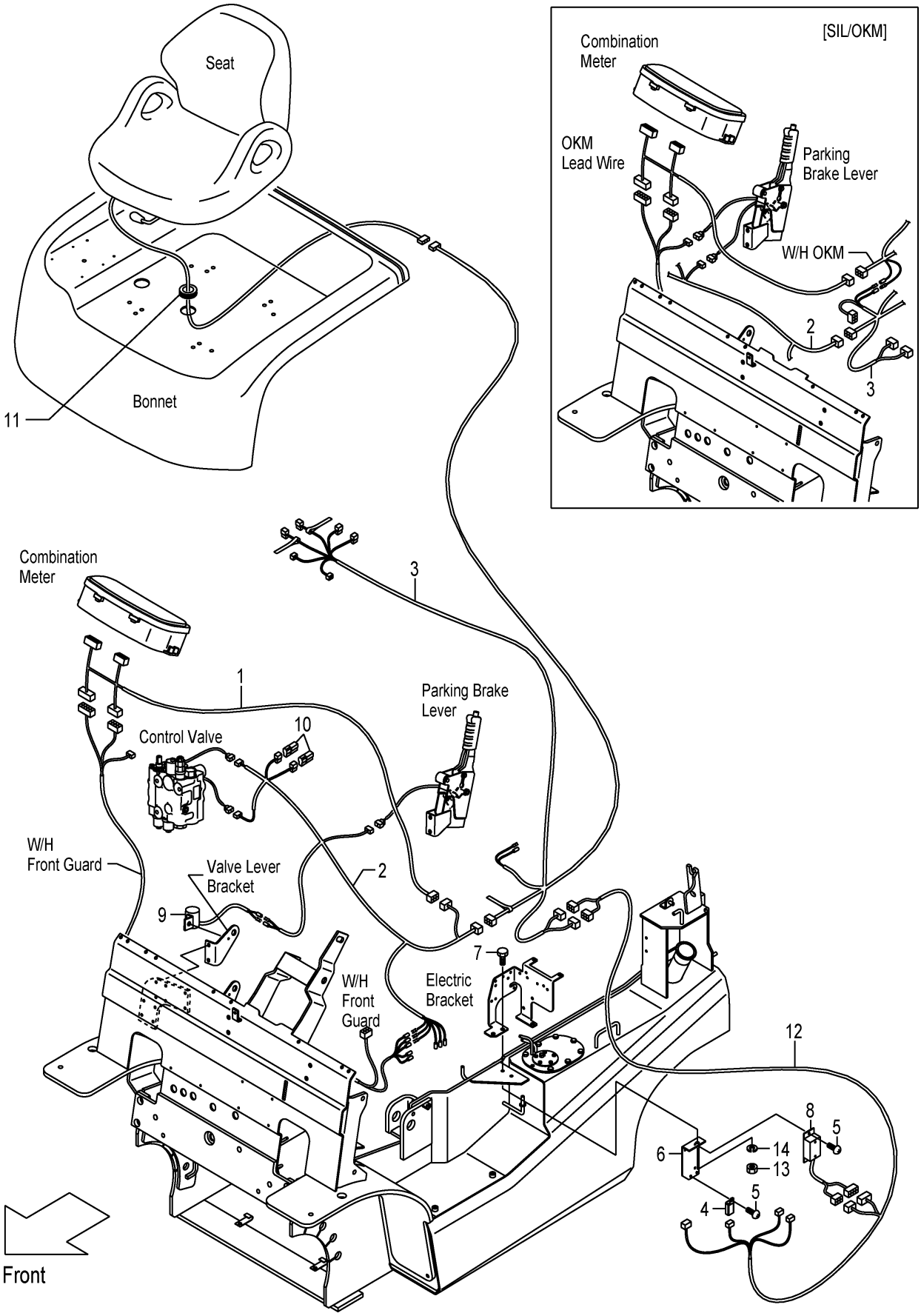

FIG.46

(F7Z126K0)

A:FHD15C3Z FHD18C3Z

Item No	Part No.	Mark	Description		Req'd	Remarks : Serial No.
1	52N56-22021		WIRE,LEAD,OKM	ﾜｲﾔ	1	[SIL](WITHOUT SIL/OKM)
2	52N57-E2002		WIRE-HARNESS,SIL,F	ﾜｲﾔﾊｰﾈｽ	1	[SIL]
3	52N57-E2012		WIRE-HARNESS,SIL,R	ﾜｲﾔﾊｰﾈｽ	1	[SIL]
4	209K2-42351		RELAY,1A	ﾘﾚｰ	1	[SIL]
5	214A2-42611		SCREW	ｽｸﾘｭ	3	[SIL]
6	52N57-E2201		BRACKET,RELAY	ﾌﾞﾗｹｯﾄ	1	[SIL]
7	01185-08025		BOLT	ﾎﾞﾙﾄ	1	[SIL]
8	247C2-43301		TIMER	ﾀｲﾏ	1	[SIL]
9	247C2-43601		BUZZER	ﾌﾞｻﾞｰ	1	[SIL]
10	230C2-42201		DIODE,3A	ﾀﾞｲｵｰﾄﾞ	2	[SIL]
11	27682-62131		GROMMET	ｸﾞﾛﾒｯﾄ	1	[SIL]
12	246B2-43221		WIRE,LEAD,SIL	ﾜｲﾔ	1	[SIL]
13	01400-00008		NUT	ﾅｯﾄ	1	[SIL]
14	02010-00008		WASHER	ﾜｯｼｬ	1	[SIL]

FIG.47 INTERLOCK (TOR-CON):[SIL]

(F7Z126L0) インターロック

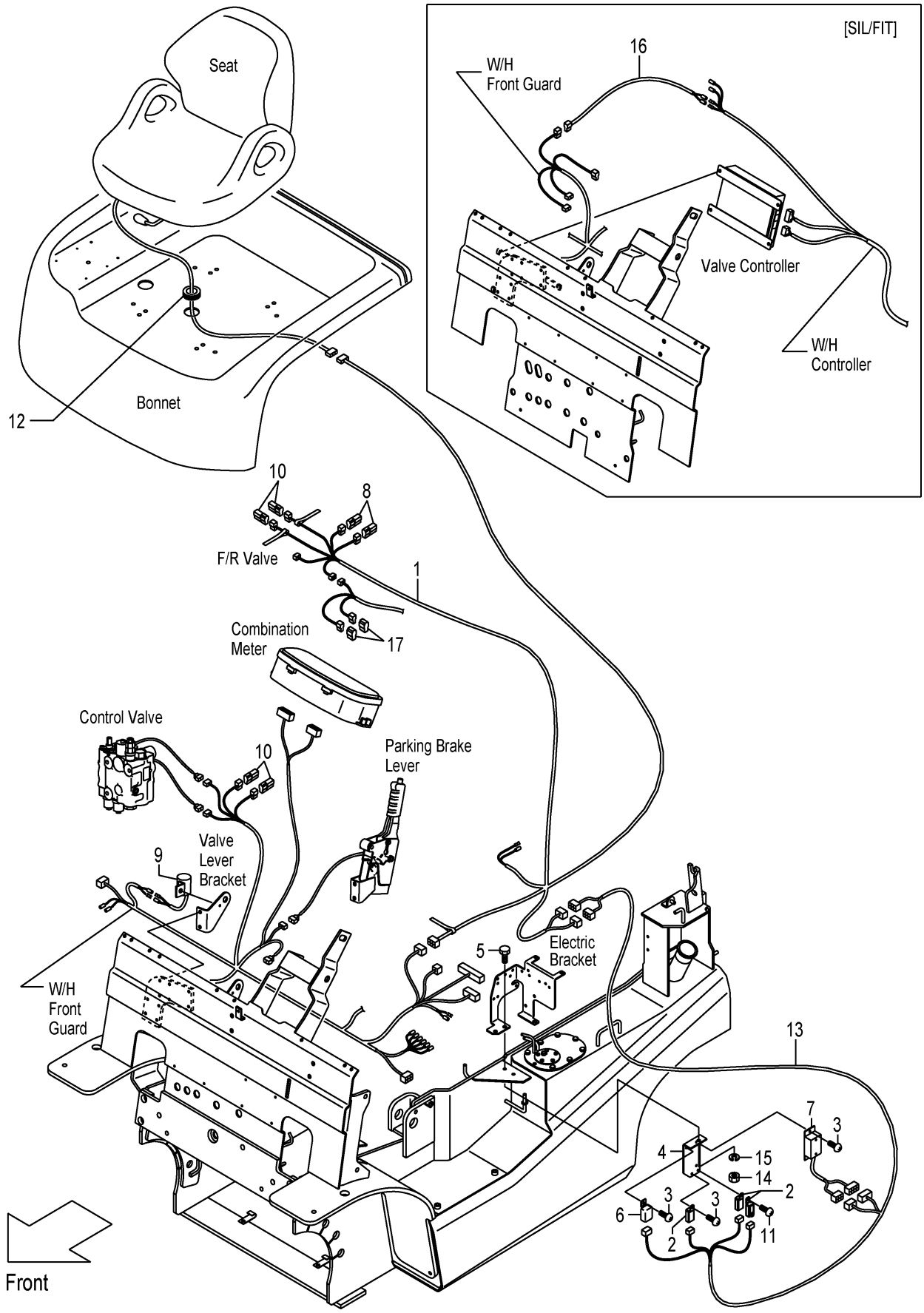

FIG.47

(F7Z126L0)

A:FHD15T3Z FHD18T3Z

Item No	Part No.	Mark	Description		Req'd	Remarks : Serial No.
1	52N57-E2012		WIRE-HARNESS,SIL,R	ﾜｲﾔﾊｰﾈｽ	1	[SIL]
2	209K2-42351		RELAY,1A	ﾘﾚｰ	3	[SIL]
3	214A2-42611		SCREW	ｽｸﾘｭ	4	[SIL]
4	52N57-E2201		BRACKET,RELAY	ﾌﾞﾗｹｯﾄ	1	[SIL]
5	01185-08025		BOLT	ﾎﾞﾙﾄ	1	[SIL]
6	247C2-43501		RELAY,1C	ﾘﾚｰ	1	[SIL]
7	247C2-43301		TIMER	ﾀｲﾏ	1	[SIL]
8	21152-42091		DIODE,1A	ﾀﾞｲｵｰﾄﾞ	2	[SIL]
9	247C2-43601		BUZZER	ﾌﾞｻﾞｰ	1	[SIL]
10	230C2-42201		DIODE,3A	ﾀﾞｲｵｰﾄﾞ	4	[SIL]
11	214A2-42621		SCREW	ｽｸﾘｭ	1	[SIL]
12	27682-62131		GROMMET	ｸﾞﾛﾒｯﾄ	1	[SIL]
13	246B2-43221		WIRE,LEAD,SIL	ﾜｲﾔ	1	[SIL]
14	01400-00008		NUT	ﾅｯﾄ	1	[SIL]
15	02010-00008		WASHER	ﾜｯｼｬ	1	[SIL]
16	52N52-B2402		WIRE,LEAD,SIL/FIT	ﾜｲﾔ	1	[SIL/FIT]
17	52N57-E3021		HOUSING,CONNECTOR	ﾊｳｼﾞﾝｸﾞ	2	[SIL]

FIG.48 DRIVE UNIT MOUNT (CLUTCH)

(F7Z12510) ﾄﾞﾗｲﾌﾞﾕﾆｯﾄﾏｳﾝﾄ

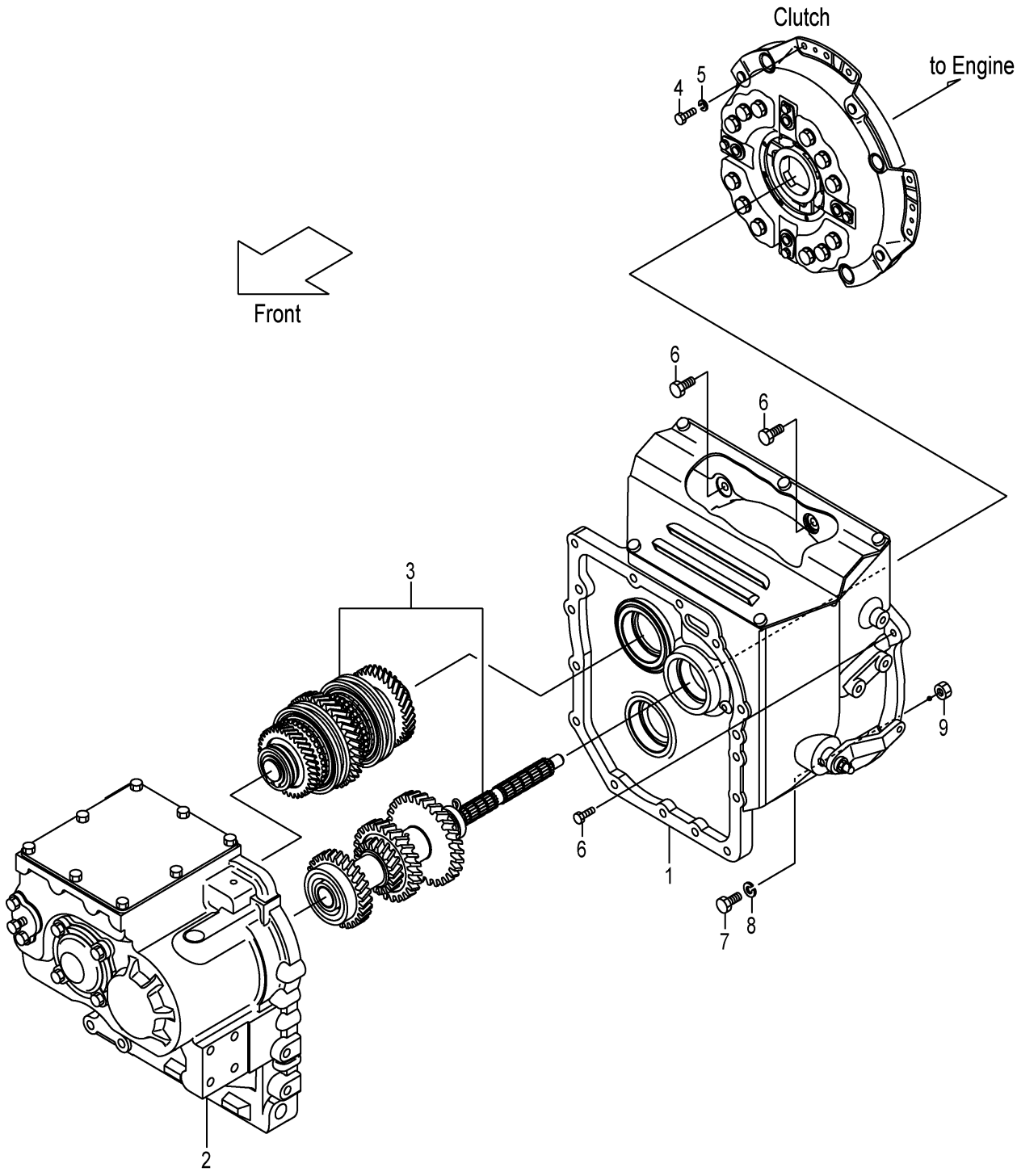

A:FHD15C3Z FHD18C3Z

Item No	Part No.	Mark	Description		Req'd	Remarks : Serial No.
A1	10B62-50201		UNIT-ASSY,DRIVE	ﾄﾞﾗｲﾌﾞﾕﾆｯﾄｱｯｾﾝ	1	1-334
						INC.1-3
-	10B62-50202		UNIT-ASSY,DRIVE	ﾄﾞﾗｲﾌﾞﾕﾆｯﾄｱｯｾﾝ	1	335-
						INC.1-3
1	NO PART NO.		CLUTCH	ｸﾗｯﾁ	1	SEE FIG.51:1-18
2	NO PART NO.		CASE,T/M	ｹｰｽ	1	SEE FIG.52
3	NO PART NO.		GEAR,T/M	ｷﾞｬｰ	1	SEE FIG.53
4	01103-08016		BOLT	ﾎﾞﾙﾄ	12	
5	02011-00008		WASHER	ﾜｯｼｬ	12	
6	01184-10030		BOLT	ﾎﾞﾙﾄ	7	
7	01100-10050		BOLT	ﾎﾞﾙﾄ	1	
8	02010-00010		WASHER	ﾜｯｼｬ	1	
9	01400-00010		NUT	ﾅｯﾄ	1	

FIG.49 DRIVE UNIT MOUNT (TOR-CON)

(F7Z12520) ﾄﾞﾗｲﾌﾞﾕﾆｯﾄﾏｳﾝﾄ

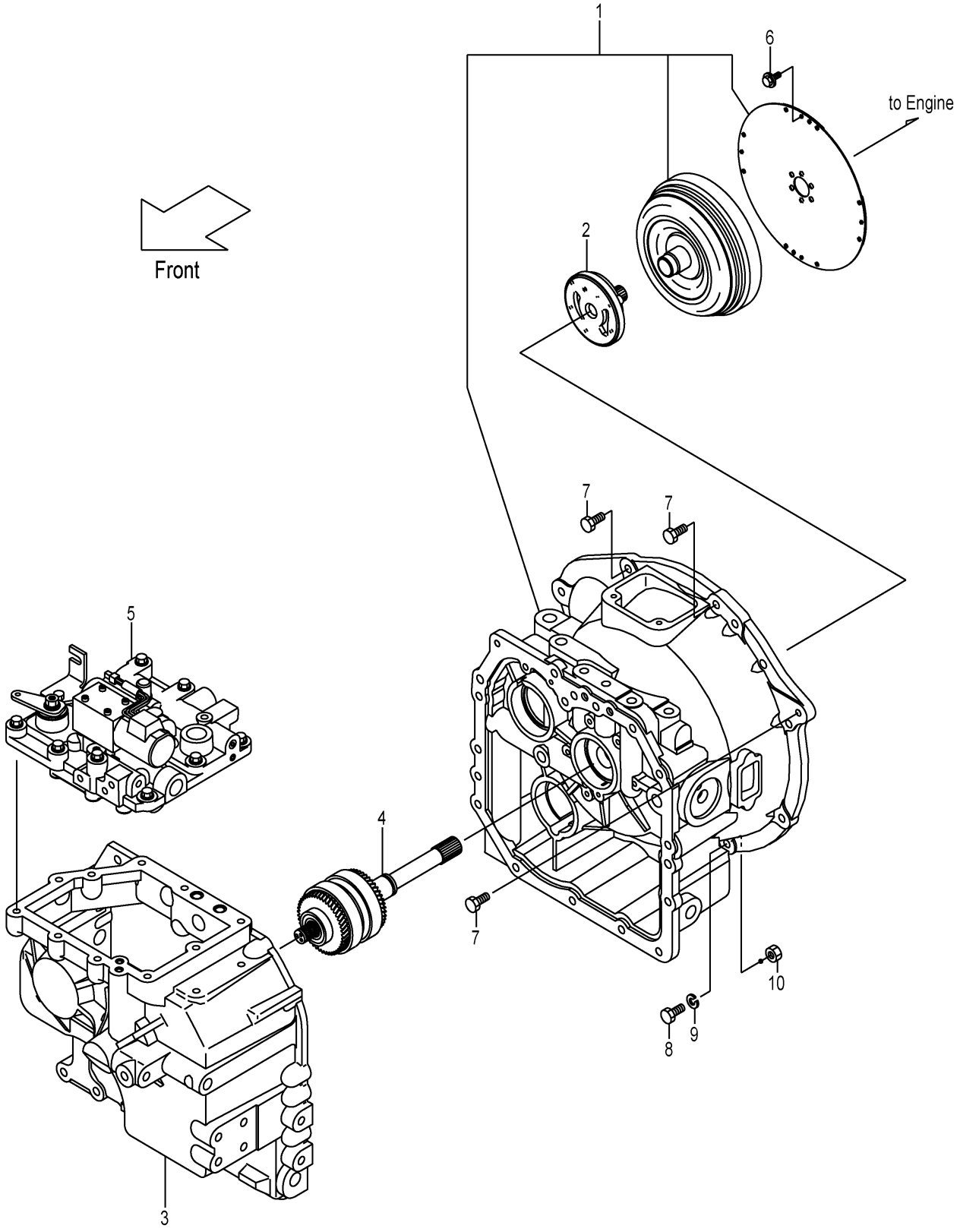

A:FHD15T3Z FHD18T3Z

Item No	Part No.	Mark	Description		Req'd	Remarks : Serial No.
A1	12N52-50201		UNIT-ASSY,DRIVE	ﾄﾞﾗｲﾌﾞﾕﾆｯﾄｱｯｾﾝ	1	INC.1-5
1	NO PART NO.		CASE,T/C	ｹｰｽ	1	SEE FIG.54
2	NO PART NO.		PUMP	ﾎﾟﾝﾌﾟ	1	SEE FIG.55
3	NO PART NO.		CASE,T/M	ｹｰｽ	1	SEE FIG.56
4	NO PART NO.		PACK,CLUTCH	ﾊﾟｯｸ	1	SEE FIG.57
5	NO PART NO.		VALVE,CONTROL	ﾊﾞﾙﾌﾞ	1	SEE FIG.58
6	12N53-82621		BOLT,FLANGE	ﾎﾞﾙﾄ	12	
7	01184-10030		BOLT	ﾎﾞﾙﾄ	7	
8	01100-10050		BOLT	ﾎﾞﾙﾄ	1	
9	02010-00010		WASHER	ﾜｯｼｬ	1	
10	01400-00010		NUT	ﾅｯﾄ	1	

FIG.50 CHANGE LEVER (CLUTCH)

(F7Z12540) ﾁｪﾝｼﾞﾚﾊﾞｰ

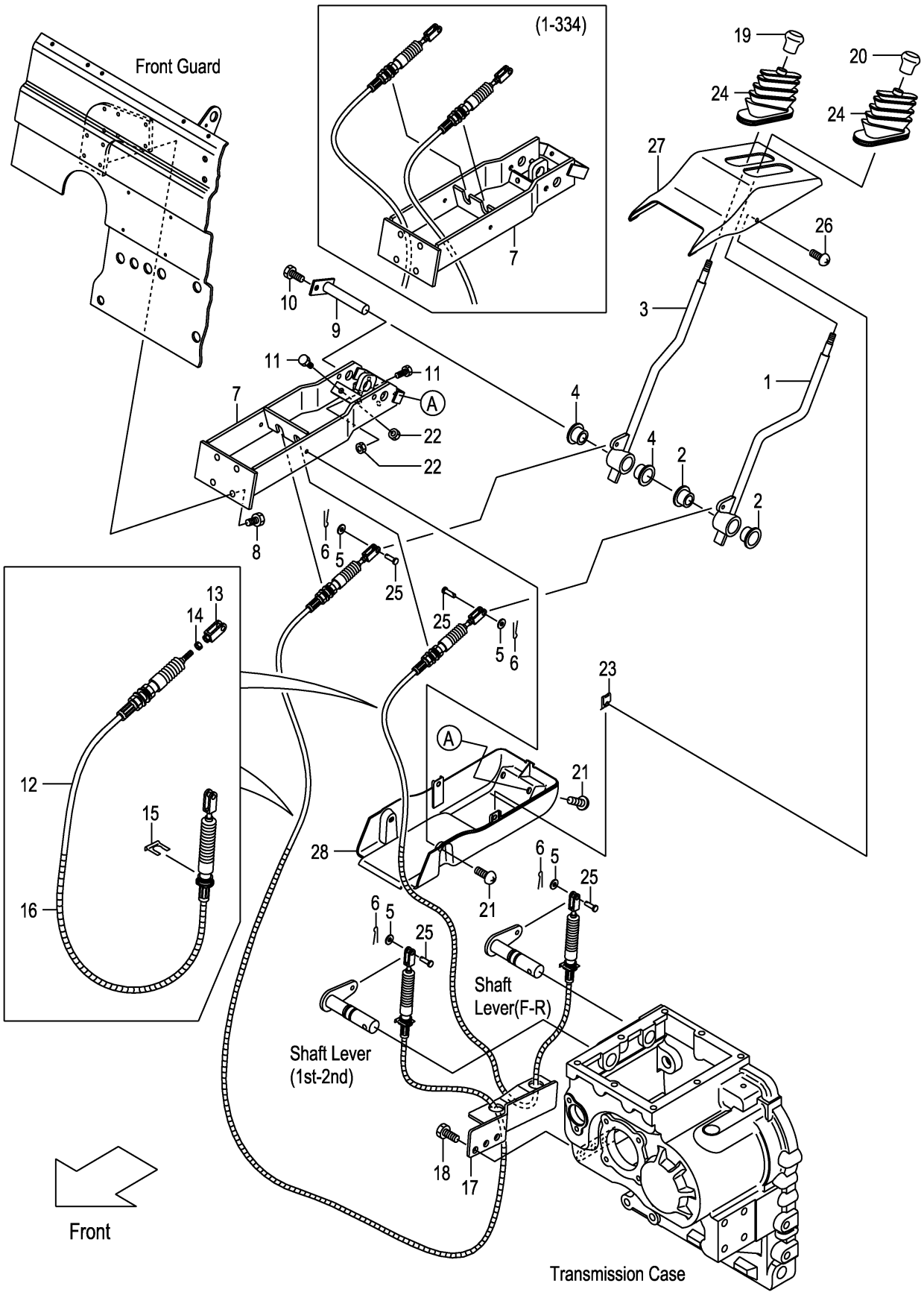

A:FHD15C3Z FHD18C3Z

Item No	Part No.	Mark	Description		Req'd	Remarks : Serial No.
A1	22N43-90202		LEVER-ASSY,DIRECTION		1	1-334
				ﾃﾞｨﾚｸｼｮﾝﾚﾊﾞｰｱｯｾﾝ		INC.1,2
-	22N43-90311		LEVER-ASSY,DIRECTION		1	335-
				ﾃﾞｨﾚｸｼｮﾝﾚﾊﾞｰｱｯｾﾝ		INC.1,2
1	NO PART NO.	#	LEVER,DIRECTION	ﾚﾊﾞｰ	1	
2	214A7-42071		BUSHING	ﾌﾞｯｼﾝｸﾞ	2	
A2	22N43-90212		LEVER-ASSY,SPEED	ｽﾋﾟｰﾄﾞﾚﾊﾞｰｱｯｾﾝ	1	1-334
						INC.3,4
-	22N43-90321		LEVER-ASSY,SPEED	ｽﾋﾟｰﾄﾞﾚﾊﾞｰｱｯｾﾝ	1	335-
						INC.3,4
3	NO PART NO.	#	LEVER,SPEED	ﾚﾊﾞｰ	1	
4	214A7-42071		BUSHING	ﾌﾞｯｼﾝｸﾞ	2	
5	02000-00006		WASHER	ﾜｯｼｬ	4	
6	02200-16010		PIN,COTTER	ﾋﾟﾝ	4	
7	22N43-90301		BRACKET	ﾌﾞﾗｹｯﾄ	1	1-334
-	22N43-90411		BRACKET	ﾌﾞﾗｹｯﾄ	1	335-
8	01185-08020		BOLT	ﾎﾞﾙﾄ	4	
9	22N43-92201		SHAFT	ｼｬﾌﾄ	1	
10	01183-08012		BOLT	ﾎﾞﾙﾄ	1	
11	01100-08025		BOLT	ﾎﾞﾙﾄ	4	1-334
-	01100-08020		BOLT	ﾎﾞﾙﾄ	4	335-
A3	22N43-90511		CABLE-ASSY	ｹｰﾌﾞﾙｱｯｾﾝ	2	1-334
						INC.12-16
-	22N43-90561		CABLE-ASSY	ｹｰﾌﾞﾙｱｯｾﾝ	2	335-
						INC.12-16
12	22N43-93001		CABLE	ｹｰﾌﾞﾙ	2	1-334
-	22N43-93201		CABLE	ｹｰﾌﾞﾙ	2	335-
13	22N43-93021		END	ｴﾝﾄﾞ	2	
14	01402-00006		NUT	ﾅｯﾄ	2	
15	22N43-93011		CLAMP	ｸﾗﾝﾌﾟ	2	
16	22N43-93031		PROTECTOR	ﾌﾟﾛﾃｸﾀ	2	
17	22N43-92302		BRACKET	ﾌﾞﾗｹｯﾄ	1	1-334
-	22N43-93151		BRACKET	ﾌﾞﾗｹｯﾄ	1	335-
18	01213-10025		BOLT	ﾎﾞﾙﾄ	3	
19	214A2-52002		KNOB,SPEED	ﾉﾌﾞ	1	
20	214A2-52012		KNOB,DIRECTION	ﾉﾌﾞ	1	
21	225R6-42031		SCREW	ｽｸﾘｭ	4	
22	01402-00008		NUT	ﾅｯﾄ	4	
23	281E6-42521		NUT,SPEED	ﾅｯﾄ	2	
24	22N43-92731		BOOT	ﾌﾞｰﾂ	2	
25	02262-06020		PIN,CLEVIS	ﾋﾟﾝ	4	
26	209K2-43001		SCREW	ｽｸﾘｭ	2	
27	22N43-92901		COVER,UPPER	ｶﾊﾞｰ	1	
28	22N43-92911		COVER,UNDER	ｶﾊﾞｰ	1	

FIG.51 CLUTCH (CLUTCH)

(F7Z12550) クラッチ

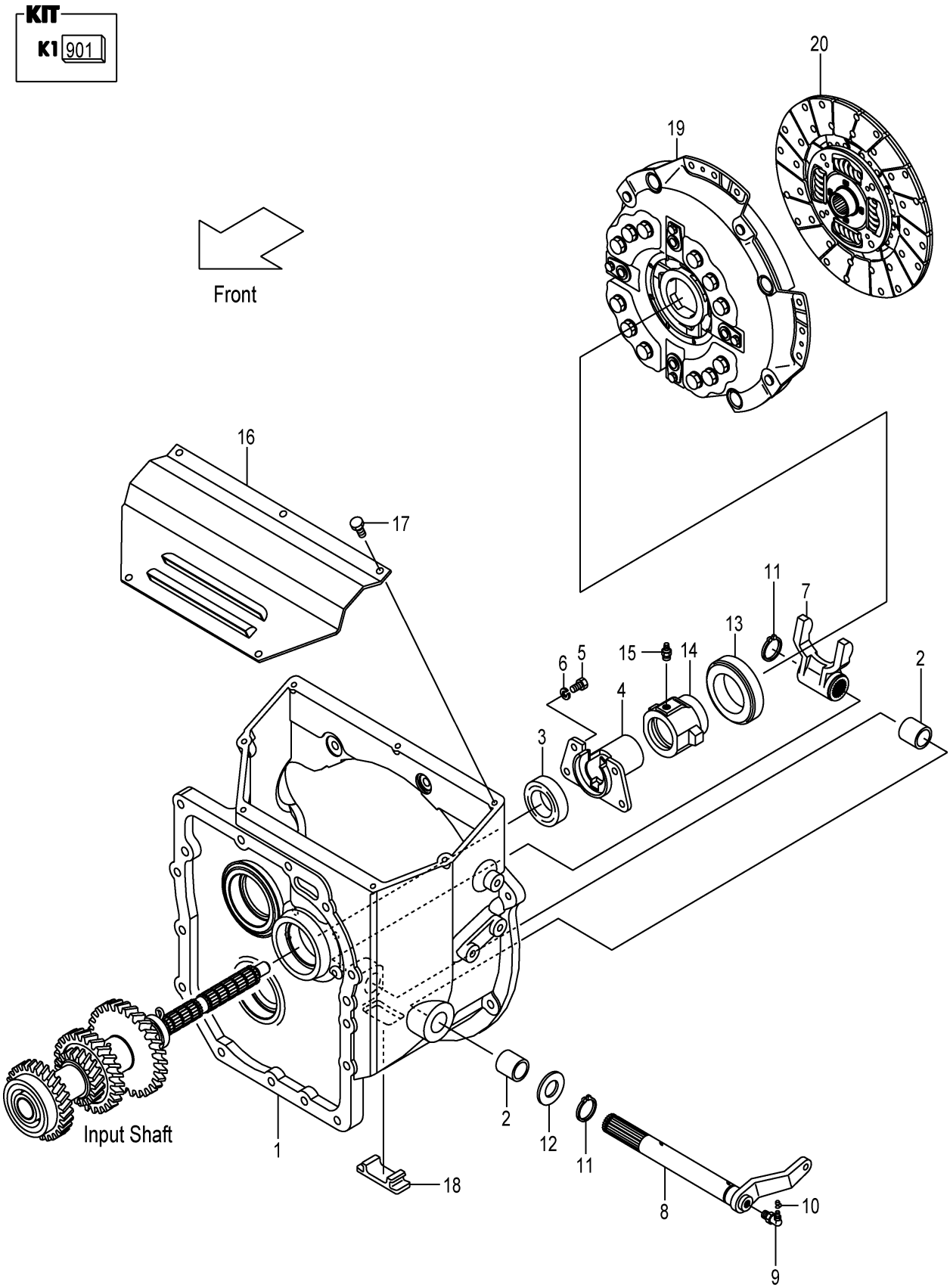

A:FHD15C3Z FHD18C3Z

Item No	Part No.	Mark	Description		Req'd	Remarks : Serial No.
901	12N43-19801	K1	KIT,REPAIR,T/M		1	INC.3,11,FIG.53:2,7,14,
				ﾄﾗﾝｽﾐｯｼｮﾝﾘﾍﾟｱｷｯﾄ		32,35,38
1	12N43-12001		HOUSING,CLUTCH	ﾊｳｼﾞﾝｸﾞ	1	
2	12003-12021		BUSHING	ﾌﾞｯｼﾝｸﾞ	2	
3	12N43-12011	*	SEAL,OIL	ｼｰﾙ	1	
4	12N43-12021		SUPPORT,RETAINER	ｻﾎﾟｰﾄ	1	
5	01103-08016		BOLT	ﾎﾞﾙﾄ	4	
6	02011-00008		WASHER	ﾜｯｼｬ	4	
7	12N43-12101		YOKE	ﾖｰｸ	1	
8	12N43-12111		SHAFT	ｼｬﾌﾄ	1	
9	04901-00190		FITTING	ﾌｨｯﾃｨﾝｸﾞ	1	
10	22199-12401		CAP,NIPPLE	ｷｬｯﾌﾟ	1	
11	02100-00025	*	RING,SNAP	ｽﾅｯﾌﾟﾘﾝｸﾞ	2	
12	02000-00024		WASHER	ﾜｯｼｬ	1	
13	135C3-12081		BEARING	ﾍﾞｱﾘﾝｸﾞ	1	
14	12N43-12201		RETAINER,BRG	ﾘﾃｰﾅ	1	
15	04901-00100		FITTING	ﾌｨｯﾃｨﾝｸﾞ	1	
16	12N43-12151		COVER,CLUTCH-HOUSING	ｶﾊﾞｰ	1	
17	01183-08016		BOLT	ﾎﾞﾙﾄ	5	
18	12N53-82061		COVER,UNDER	ｶﾊﾞｰ	1	
19	10A63-10201		COVER,CLUTCH	ｶﾊﾞｰ	1	
20	12N43-10211		DISK,CLUTCH	ﾃﾞｨｽｸ	1	

FIG.52 MISSION CASE (CLUTCH)

(F7Z12560) ミッションケース

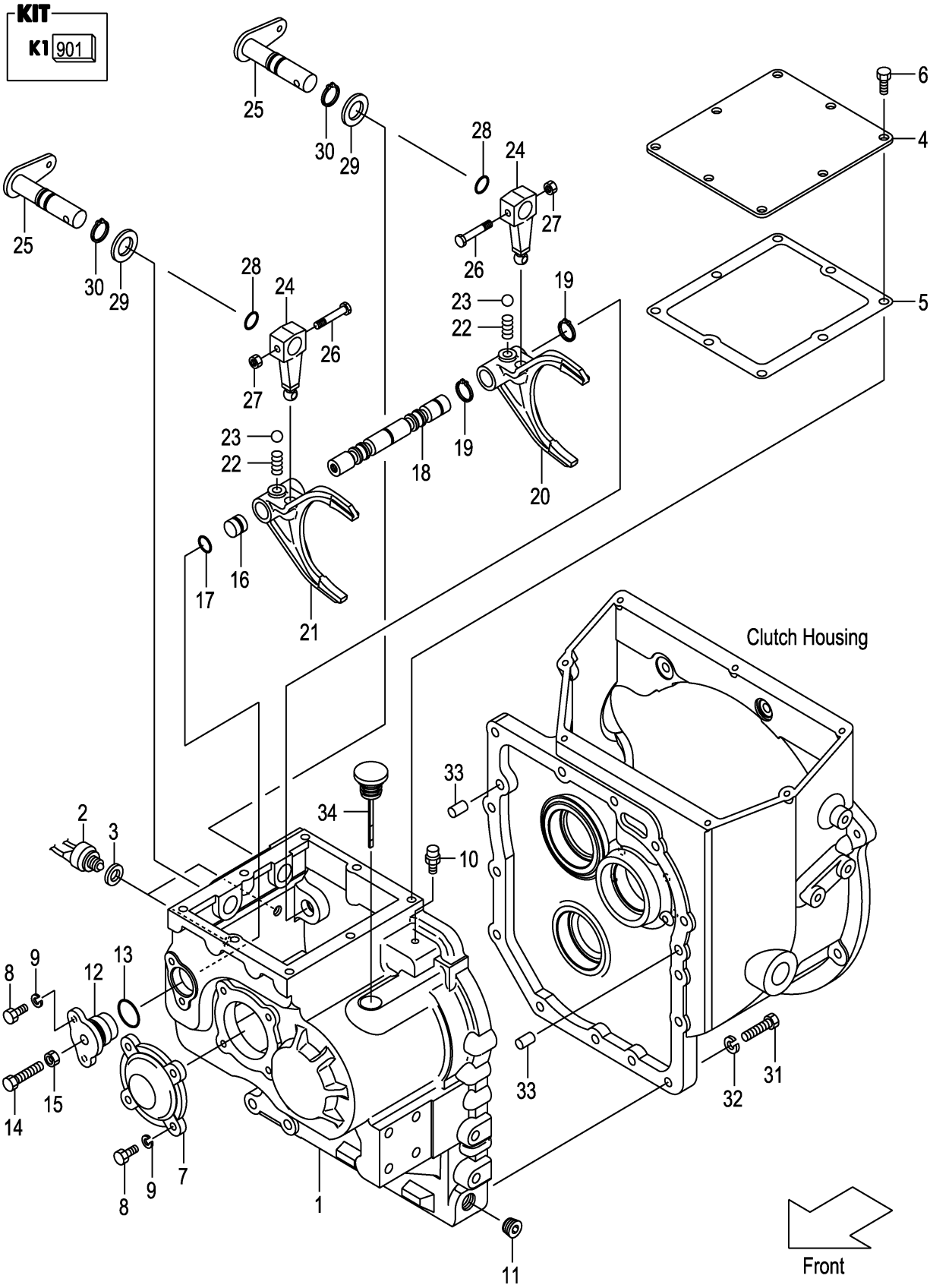

A:FHD15C3Z FHD18C3Z

Item No	Part No.	Mark	Description		Req'd	Remarks : Serial No.
901	12N43-19811	K1	KIT,REPAIR,SHIFT-ROD	ﾘﾍﾟｱｷｯﾄ	1	INC.3,5,13,17,19,27,28,30
1	12N43-42001		CASE,T/M	ｹｰｽ	1	
2	12003-42451		SWITCH,BACK-LAMP	ｽｲｯﾁ	2	
3	12003-42461	*	PACKING,BACK-LAMP	ﾊﾟｯｷﾝｸﾞ	2	
4	12N43-42511		COVER,CASE	ｶﾊﾞｰ	1	
5	12N43-42521	*	GASKET,CASE-COVER	ｶﾞｽｹｯﾄ	1	
6	01184-10016		BOLT	ﾎﾞﾙﾄ	8	
7	12N43-42031		COVER,BRG	ｶﾊﾞｰ	1	
8	01103-08020		BOLT	ﾎﾞﾙﾄ	6	
9	02011-00008		WASHER	ﾜｯｼｬ	6	
10	15573-42151		BREATHER,AIR	ﾌﾞﾘｰｻﾞ	1	
11	12163-82541		PLUG	ﾌﾟﾗｸﾞ	1	
12	12003-42052		SUPPORT,ARM-SHAFT	ｻﾎﾟｰﾄ	1	
13	03310-00300	*	O-RING	Oﾘﾝｸﾞ	1	
14	01123-10045		BOLT	ﾎﾞﾙﾄ	1	
15	01400-00010		NUT	ﾅｯﾄ	1	
16	12003-42061		SPACER	ｽﾍﾟｰｻ	1	
17	03300-00160	*	O-RING	Oﾘﾝｸﾞ	1	
18	12N43-42401		ROD,SHIFT	ﾛｯﾄﾞ	1	
19	02100-00020	*	RING,SNAP	ｽﾅｯﾌﾟﾘﾝｸﾞ	2	
20	12N43-42411		FORK,SHIFT,F-R	ﾌｫｰｸ	1	
21	12N43-42421		FORK,SHIFT,H-L	ﾌｫｰｸ	1	
22	12N43-42481		SPRING	ｽﾌﾟﾘﾝｸﾞ	2	1-334
-	12003-42421		SPRING	ｽﾌﾟﾘﾝｸﾞ	2	335-
23	03190-00013		BALL,STEEL	ﾎﾞｰﾙ	2	
24	12N43-42431		ARM,SHIFT	ｱｰﾑ	2	
25	12N43-42441		LEVER,SHIFT	ﾚﾊﾞｰ	2	1-334
-	12N43-42601		LEVER,SHIFT	ﾚﾊﾞｰ	2	335-
26	12N43-42471		BOLT	ﾎﾞﾙﾄ	2	
27	23652-12051	*	NUT	ﾅｯﾄ	2	
28	03300-00180	*	O-RING	Oﾘﾝｸﾞ	2	
29	02000-00022		WASHER	ﾜｯｼｬ	2	
30	02100-00022	*	RING,SNAP	ｽﾅｯﾌﾟﾘﾝｸﾞ	2	
31	01103-10040		BOLT	ﾎﾞﾙﾄ	14	
32	02011-00010		WASHER	ﾜｯｼｬ	14	
33	02212-12020		PIN,PARALLEL	ﾋﾟﾝ	2	
34	12N43-42501		GAUGE,LEVEL	ｹﾞｰｼﾞ	1	

FIG.53 MISSION GEAR (CLUTCH)

(F7Z12570) ﾐｯｼｮﾝｷﾞｬｰ

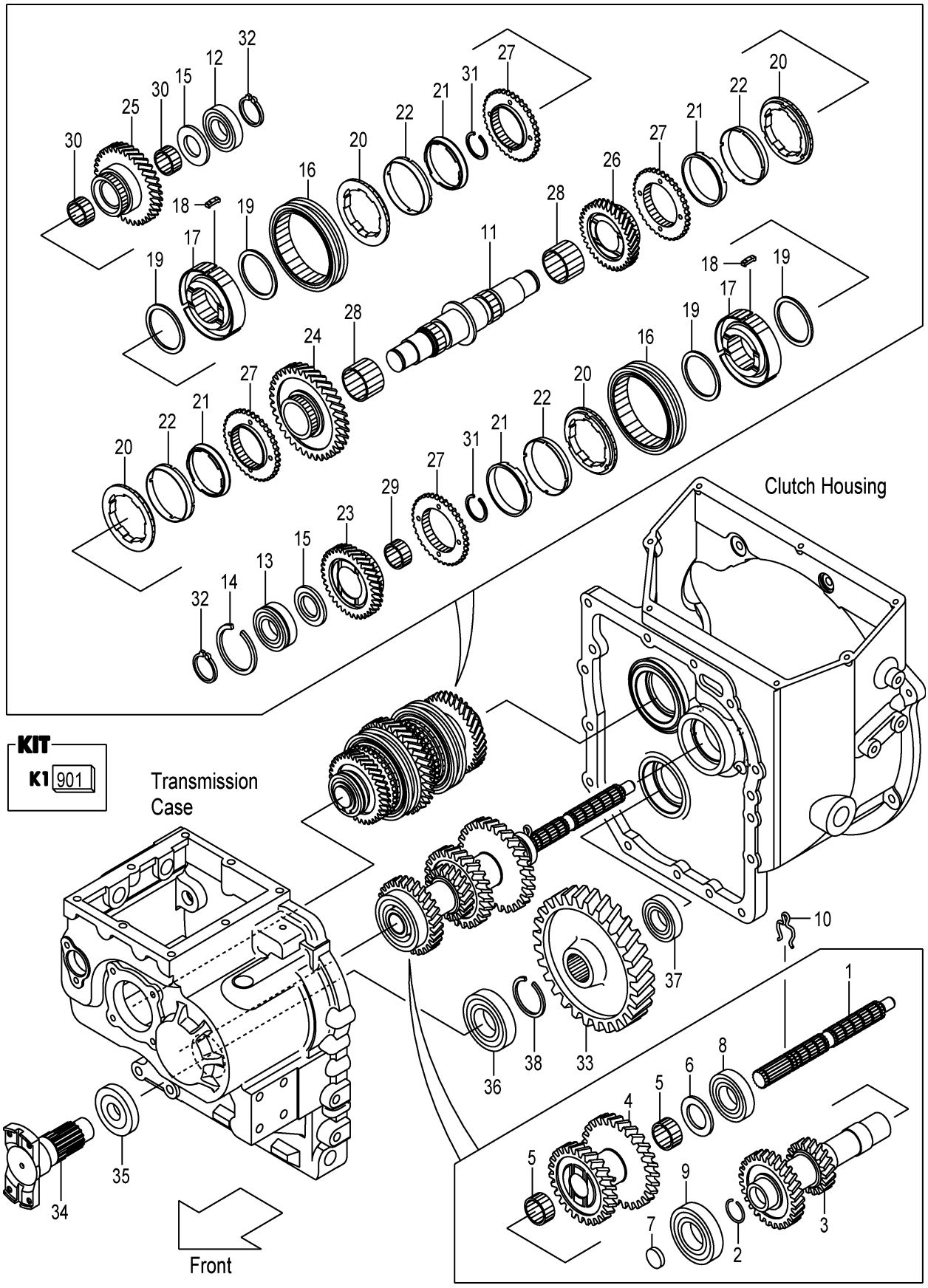

A:FHD15C3Z FHD18C3Z

Item No	Part No.	Mark	Description		Req'd	Remarks : Serial No.
901	12N43-19801	K1	KIT,REPAIR,T/M		1	INC.2,7,14,32,35,38,
				ﾄﾗﾝｽﾐｯｼｮﾝﾘﾍﾟｱｷｯﾄ		FIG.51:3,11
1	12N43-42051		SHAFT,MAIN-DRIVE	ｼｬﾌﾄ	1	
2	12N43-42071	*	RING,SNAP	ｽﾅｯﾌﾟﾘﾝｸﾞ	1	
3	10B63-42001		SHAFT,INPUT	ｼｬﾌﾄ	1	
4	12N43-42111		GEAR,COUNTER	ｷﾞｬｰ	1	
5	12N43-42121		BEARING	ﾍﾞｱﾘﾝｸﾞ	2	
6	12N43-42131		PLATE,THRUST	ﾌﾟﾚｰﾄ	1	
7	134A3-42071	*	CAP	ｷｬｯﾌﾟ	1	
8	03000-06207		BEARING	ﾍﾞｱﾘﾝｸﾞ	1	
9	03000-06208		BEARING	ﾍﾞｱﾘﾝｸﾞ	1	
10	12N43-42061		PIN,LOCK	ﾋﾟﾝ	1	
11	12N43-42141		SHAFT,MAIN	ｼｬﾌﾄ	1	
12	03000-06306		BEARING	ﾍﾞｱﾘﾝｸﾞ	1	
13	03003-06306		BEARING	ﾍﾞｱﾘﾝｸﾞ	1	
14	03192-30072	*	RING,SNAP	ｽﾅｯﾌﾟﾘﾝｸﾞ	1	
15	12N43-42191		PLATE,THRUST	ﾌﾟﾚｰﾄ	2	
16	12N43-42151		SLEEVE	ｽﾘｰﾌﾞ	2	
17	12N43-42161		HUB,CLUTCH	ﾊﾌﾞ	2	
18	12N43-42171		INSERT	ｲﾝｻｰﾄ	6	
19	15573-42021		SPRING,INSERT	ｽﾌﾟﾘﾝｸﾞ	4	
A1	12N43-40251		RING-ASSY,SYNCHRO	ｼﾝｸﾛﾘﾝｸﾞｱｯｾﾝ	4	INC.20-22
20	NO PART NO.	#	RING,OUTER,SYNCHRO	ﾘﾝｸﾞ	4	
21	NO PART NO.	#	RING,INNER,SYNCHRO	ﾘﾝｸﾞ	4	
22	NO PART NO.	#	CORN,MIDDLE	ｺｰﾝ	4	
23	12N43-42251		GEAR,HIGH-SPEED	ｷﾞｬｰ	1	
24	10B63-42011		GEAR,LOW-SPEED	ｷﾞｬｰ	1	
25	12N43-42271		GEAR,FORWARD	ｷﾞｬｰ	1	
26	12N43-42281		GEAR,REVERSE	ｷﾞｬｰ	1	
27	12N43-42291		GEAR	ｷﾞｬｰ	4	
28	12N43-42301		BEARING	ﾍﾞｱﾘﾝｸﾞ	2	
29	12003-42251		BEARING	ﾍﾞｱﾘﾝｸﾞ	1	
30	12N43-42321		BEARING	ﾍﾞｱﾘﾝｸﾞ	2	
31	02120-00038		RING,SNAP	ｽﾅｯﾌﾟﾘﾝｸﾞ	2	
32	02100-00030	*	RING,SNAP	ｽﾅｯﾌﾟﾘﾝｸﾞ	2	
-	12N43-42551	*	RING,SNAP,T-1.7	ｽﾅｯﾌﾟﾘﾝｸﾞ	(2)	
-	12N43-42561	*	RING,SNAP,T-1.8	ｽﾅｯﾌﾟﾘﾝｸﾞ	(2)	
-	12N43-42571	*	RING,SNAP,T-1.9	ｽﾅｯﾌﾟﾘﾝｸﾞ	(2)	
-	12N43-42581	*	RING,SNAP,T-2.0	ｽﾅｯﾌﾟﾘﾝｸﾞ	(2)	
33	12N43-42351		GEAR,OUTPUT	ｷﾞｬｰ	1	
34	12N53-82201		FLANGE,T/M-OUTPUT	ﾌﾗﾝｼﾞ	1	
35	12N53-82211	*	SEAL,OIL	ｼｰﾙ	1	
36	03000-06208		BEARING	ﾍﾞｱﾘﾝｸﾞ	1	
37	03000-06306		BEARING	ﾍﾞｱﾘﾝｸﾞ	1	
38	02120-00040	*	RING,SNAP	ｽﾅｯﾌﾟﾘﾝｸﾞ	1	

FIG.54 TORQUE CONVERTER CASE (TOR-CON)

(F7Z12580) トルクコンバータケース

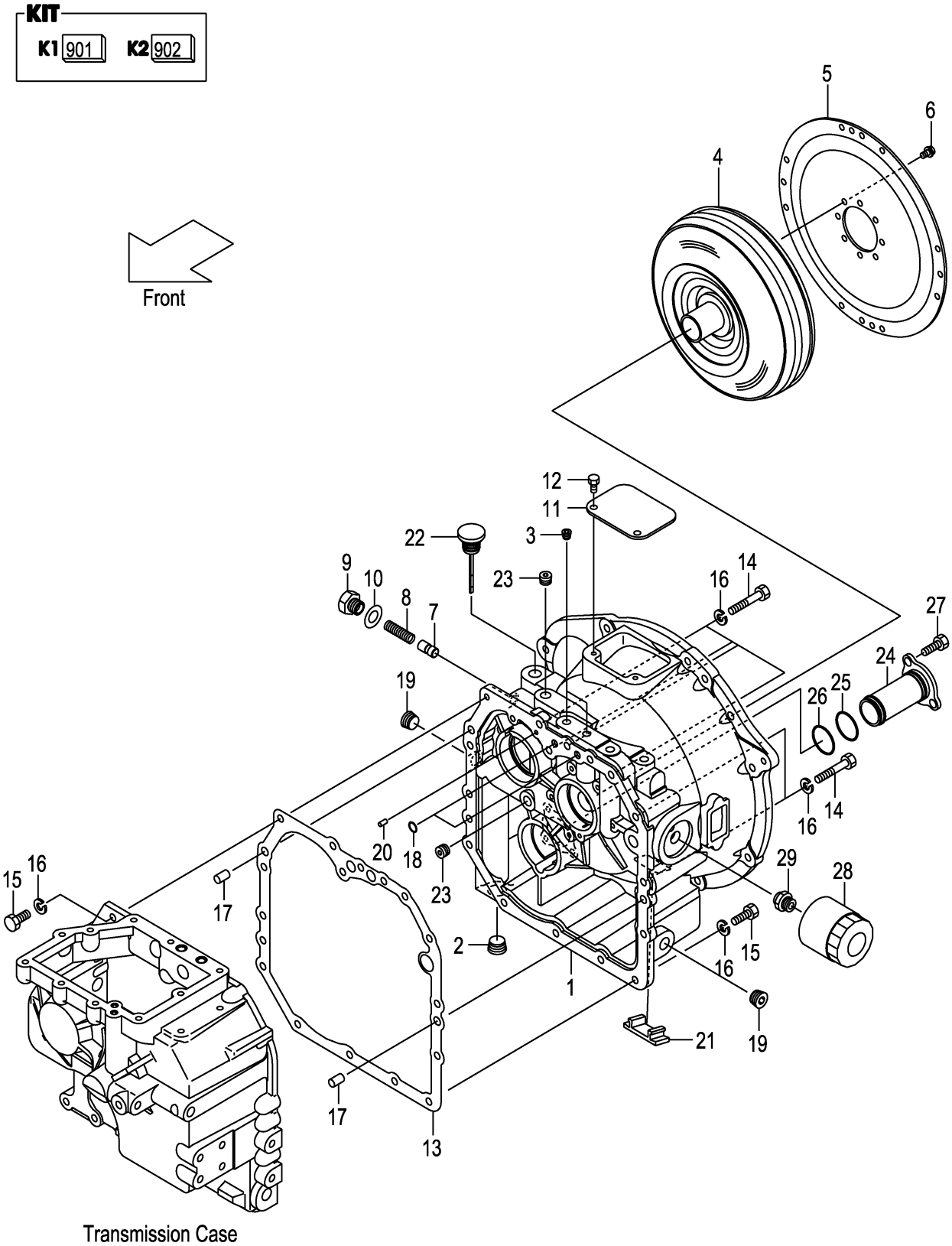

A:FHD15T3Z FHD18T3Z

Item No	Part No.	Mark	Description		Req'd	Remarks : Serial No.
901	12N53-89801	K1	KIT,REPAIR,T/M		1	INC.10,13,18,FIG.56:9,11-14
				ﾄﾗﾝｽﾐｯｼｮﾝﾘﾍﾟｱｷｯﾄ		
902	12N53-89811	K2	KIT,SUCTION-STRAINER	ｽﾄﾚｰﾅｷｯﾄ	1	INC.24-26
1	12N53-82001		CASE,TOR-CON	ｹｰｽ	1	
2	27397-52101		PLUG	ﾌﾟﾗｸﾞ	1	
3	116H3-82101		PLUG	ﾌﾟﾗｸﾞ	2	
4	12N53-80301		TORQUE-CONVERTER	ﾄﾙｸｺﾝﾊﾞｰﾀ	1	
5	12N53-80311		PLATE,INPUT	ﾌﾟﾚｰﾄ	1	
6	12N53-82621		BOLT,FLANGE	ﾎﾞﾙﾄ	8	
7	12N53-82011		PISTON	ﾋﾟｽﾄﾝ	1	(-2006.8.27)
-	12N53-82012		PISTON	ﾋﾟｽﾄﾝ	1	(2006.8.28-)
8	12163-82331		SPRING	ｽﾌﾟﾘﾝｸﾞ	1	
9	12N53-82021		PLUG	ﾌﾟﾗｸﾞ	1	
10	12163-82421	*	PACKING	ﾊﾟｯｷﾝｸﾞ	1	
11	12N53-82041		COVER,UPPER	ｶﾊﾞｰ	1	
12	01185-08016		BOLT	ﾎﾞﾙﾄ	2	
13	12N53-82081	*	GASKET	ｶﾞｽｹｯﾄ	1	
14	01103-10065		BOLT	ﾎﾞﾙﾄ	6	
15	01103-10030		BOLT	ﾎﾞﾙﾄ	9	
16	02011-00010		WASHER	ﾜｯｼｬ	15	
17	02212-12020		PIN,PARALLEL	ﾋﾟﾝ	2	
18	15583-82521	*	O-RING	Oﾘﾝｸﾞ	2	
19	12163-82541		PLUG	ﾌﾟﾗｸﾞ	2	
20	15943-83261		PIN,PARALLEL	ﾋﾟﾝ	1	
21	12N53-82061		COVER,UNDER	ｶﾊﾞｰ	1	
22	12N53-82711		GAUGE,LEVEL	ｹﾞｰｼﾞ	1	
23	24329-45541		PLUG	ﾌﾟﾗｸﾞ	2	
24	NO PART NO.	#*	STRAINER,SUCTION	ｽﾄﾚｰﾅ	1	
25	115G3-82111	*	O-RING	Oﾘﾝｸﾞ	1	
26	12N53-82761	*	O-RING	Oﾘﾝｸﾞ	1	
27	01100-08020		BOLT	ﾎﾞﾙﾄ	3	
28	115G3-82241		FILTER,OIL	ﾌｨﾙﾀ	1	
29	115G3-82251		NIPPLE	ﾆｯﾌﾟﾙ	1	

FIG.55 CHARGING PUMP (TOR-CON)

(F7Z12590) ﾁｬｰｼﾞﾝｸﾞﾎﾟﾝﾌﾟ

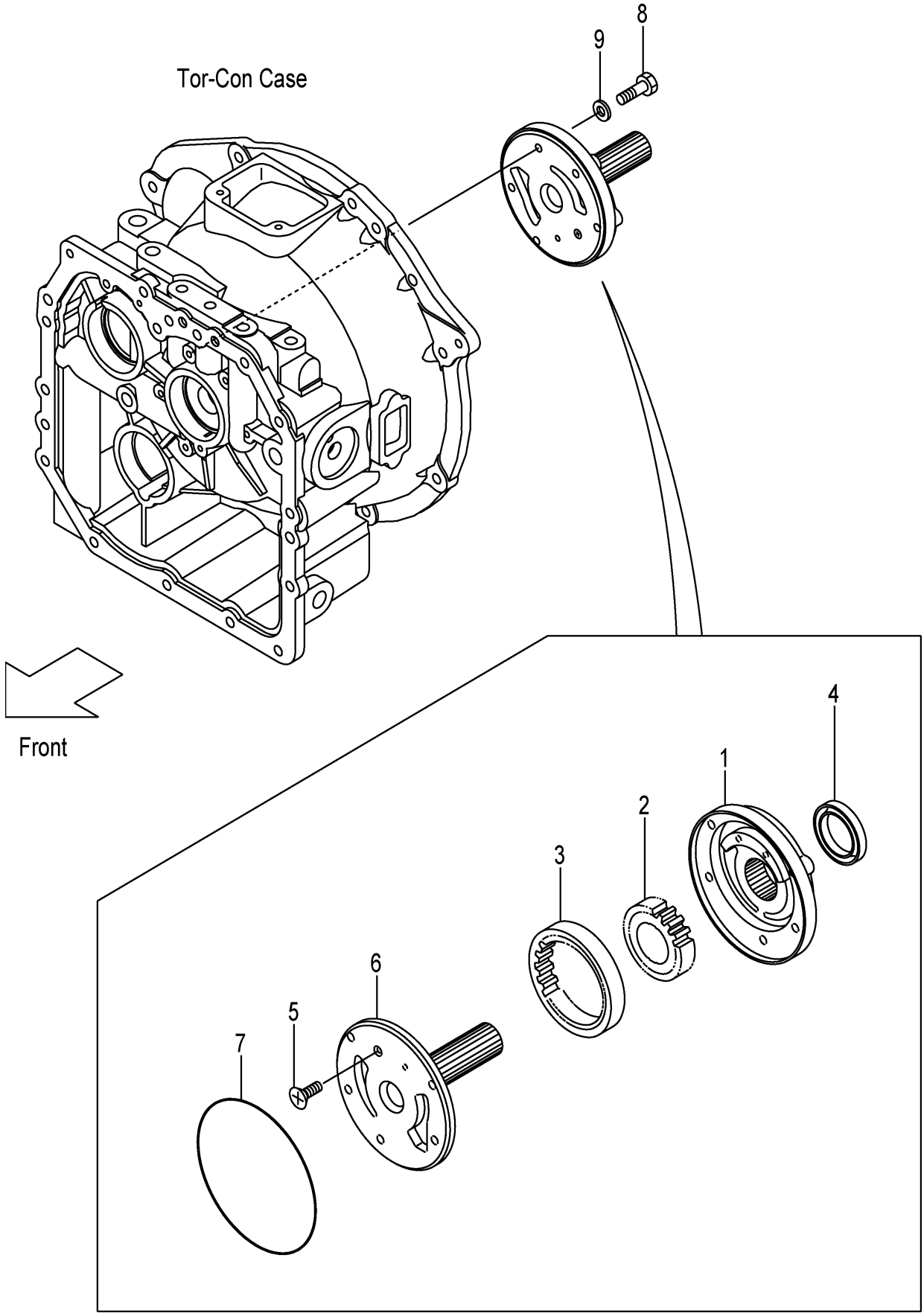

A:FHD15T3Z FHD18T3Z

Item No	Part No.	Mark	Description		Req'd	Remarks : Serial No.
A1	12N53-80321		PUMP-ASSY,CHARGING		1	INC.1-7
				ﾁｬｰｼﾞﾝｸﾞﾎﾟﾝﾌﾟｱｯｾﾝ		
1	NO PART NO.	#	CASE,PUMP	ｹｰｽ	1	
2	NO PART NO.	#	GEAR,DRIVE	ｷﾞｬｰ	1	
3	NO PART NO.	#	GEAR,DRIVEN	ｷﾞｬｰ	1	
4	BK-8104209010		SEAL,OIL	ｼｰﾙ	1	
5	NO PART NO.	#	SCREW	ｽｸﾘｭ	1	
6	NO PART NO.	#	SUPPORT,STARTER	ｻﾎﾟｰﾄ	1	
7	BK-81431A4700		O-RING	Oﾘﾝｸﾞ	1	
8	12N53-82641		BOLT,FLANGE	ﾎﾞﾙﾄ	5	
9	12163-82561		PACKING	ﾊﾟｯｷﾝｸﾞ	5	

FIG.56 MISSION CASE (TOR-CON)

(F7Z125A0) ミッションケース

KIT
K1 901

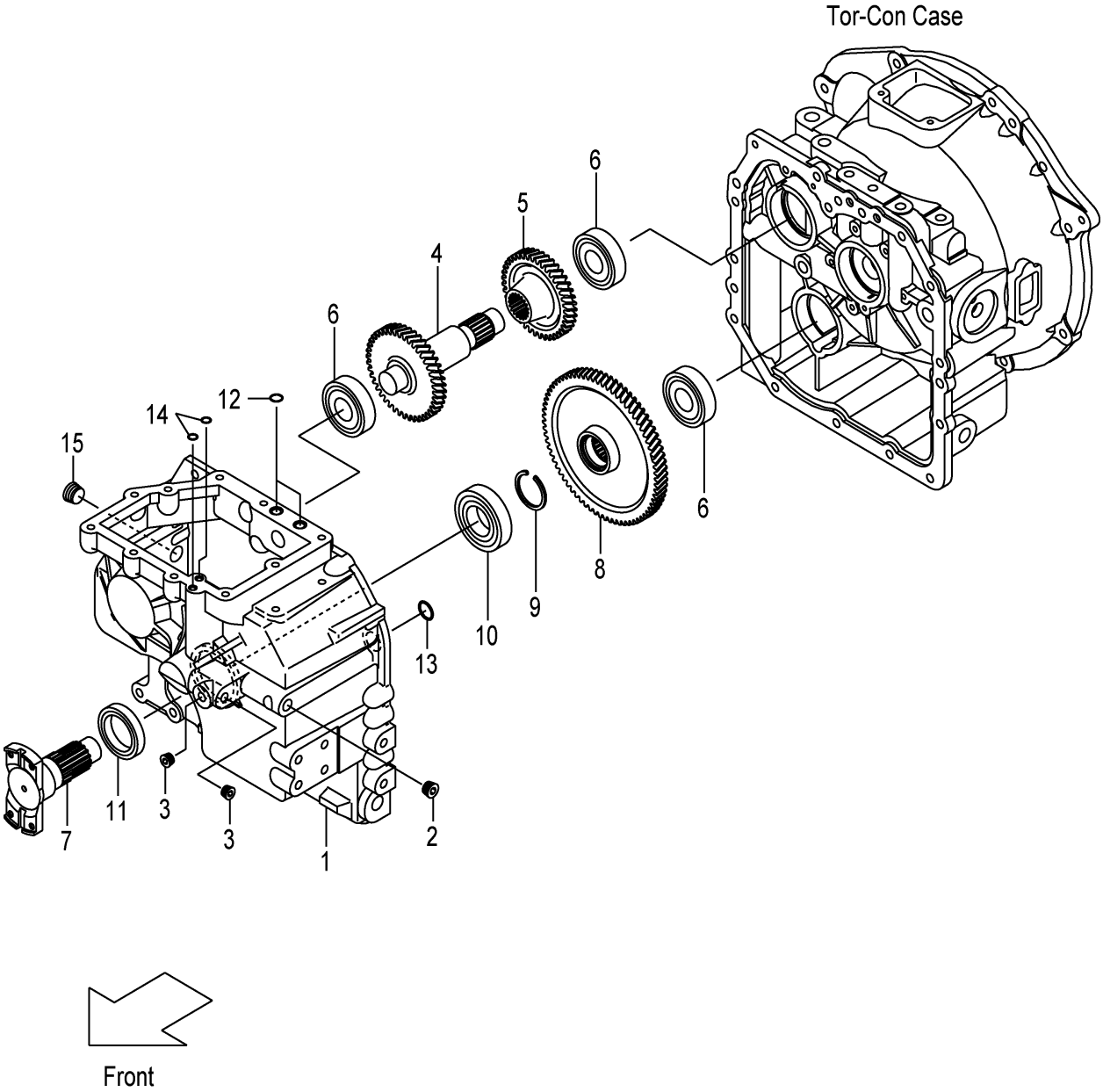

A:FHD15T3Z FHD18T3Z

Item No	Part No.	Mark	Description		Req'd	Remarks : Serial No.
901	12N53-89801	K1	KIT,REPAIR,T/M		1	INC.9,11-14,FIG.54:10,13,18
				ﾄﾗﾝｽﾐｯｼｮﾝﾘﾍﾟｱｷｯﾄ		
1	12N53-82091		CASE,T/M	ｹｰｽ	1	
2	24329-45541		PLUG	ﾌﾟﾗｸﾞ	1	
3	116H3-82101		PLUG	ﾌﾟﾗｸﾞ	2	
4	12N53-82151		SHAFT,IDLER	ｼｬﾌﾄ	1	
5	12N53-82161		GEAR,IDLER	ｷﾞｬｰ	1	
6	03000-06306		BEARING	ﾍﾞｱﾘﾝｸﾞ	3	
7	12N53-82201		FLANGE,T/M-OUTPUT	ﾌﾗﾝｼﾞ	1	
8	12N53-82171		GEAR,OUTPUT	ｷﾞｬｰ	1	
9	02120-00040	*	RING,SNAP	ｽﾅｯﾌﾟﾘﾝｸﾞ	1	
10	03000-06208		BEARING	ﾍﾞｱﾘﾝｸﾞ	1	
11	12N53-82211	*	SEAL,OIL	ｼｰﾙ	1	
12	15583-82521	*	O-RING	Oﾘﾝｸﾞ	2	
13	15583-82101	*	O-RING	Oﾘﾝｸﾞ	1	
14	15583-82571	*	O-RING	Oﾘﾝｸﾞ	2	
15	12163-82541		PLUG	ﾌﾟﾗｸﾞ	1	

FIG.57 CLUTCH PACK (TOR-CON)

(F7Z125B0) クラッチパック

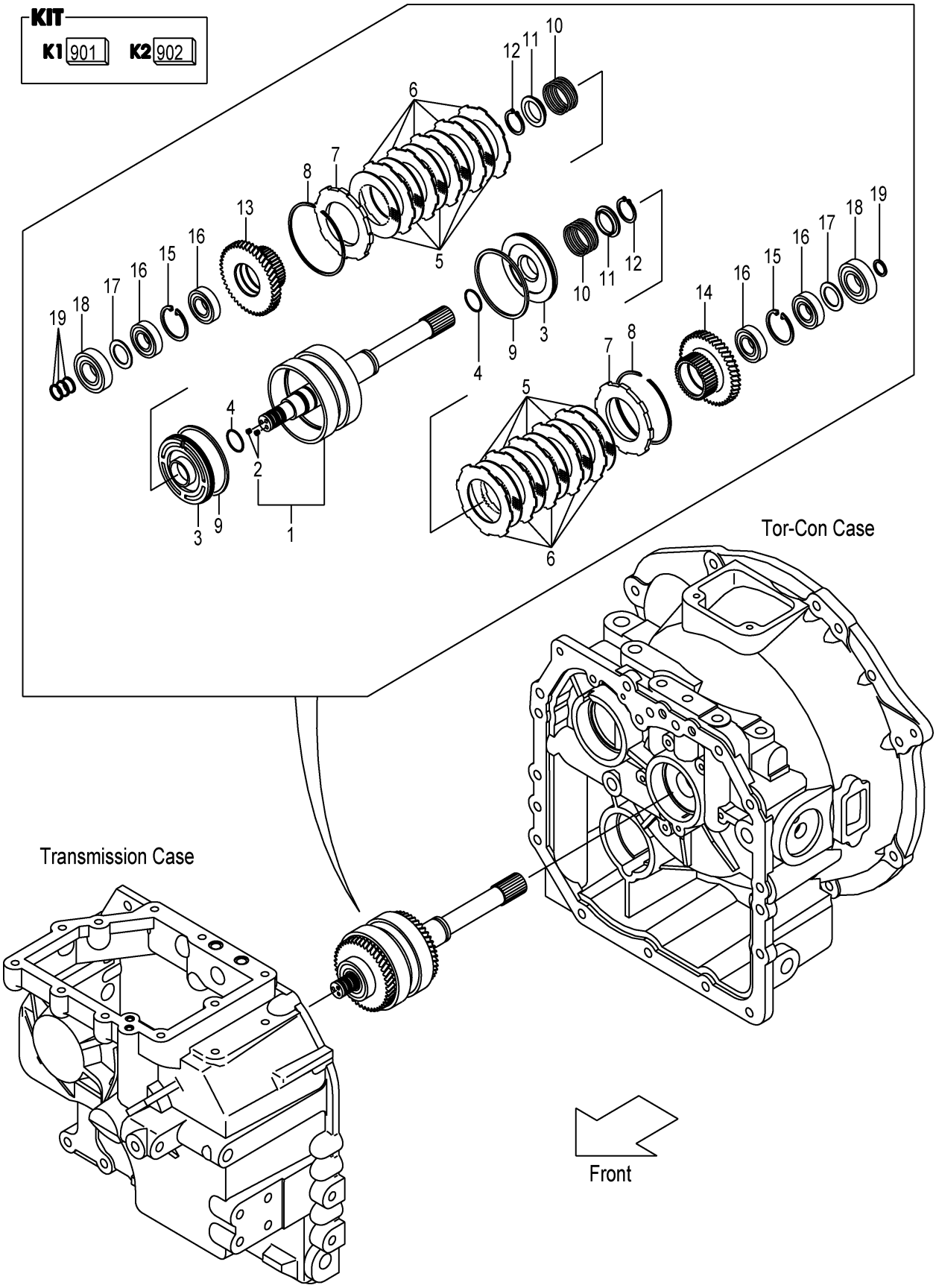

A:FHD15T3Z FHD18T3Z

Item No	Part No.	Mark	Description		Req'd	Remarks : Serial No.
A1	12N53-80201		CLUTCH-ASSY,HYDRAU		1	INC.1-19
				ﾊｲﾄﾞﾛﾘｯｸｸﾗｯﾁｱｯｾﾝ		
901	134G3-89811	K1	KIT,REPAIR,CLUTCH	ｸﾗｯﾁﾘﾍﾟｱｷｯﾄ	1	INC.4,8,9,11,12,19
902	134G3-89831	K2	KIT,REPAIR,DISK	ﾃﾞｨｽｸﾘﾍﾟｱｷｯﾄ	1	INC.5,6
1	12N53-82131		SHAFT,INPUT	ｼｬﾌﾄ	1	INC.2
2	01066-08008		PLUG	ﾌﾟﾗｸﾞ	2	
3	134G3-82111		PISTON	ﾋﾟｽﾄﾝ	2	
4	11243-82211	*	O-RING	Oﾘﾝｸﾞ	2	
5	134B3-82401	*	PLATE,FRICTION	ﾌﾟﾚｰﾄ	10	
6	134G3-82121	*	PLATE,MATING	ﾌﾟﾚｰﾄ	10	
7	134G3-82131		END,CLUTCH	ｴﾝﾄﾞ	2	
8	11243-82181	*	RING,SNAP	ｽﾅｯﾌﾟﾘﾝｸﾞ	2	
9	134G3-82141	*	RING,SEAL	ﾘﾝｸﾞ	2	
10	11243-82081		SPRING,RETURN,CLUTCH	ｽﾌﾟﾘﾝｸﾞ	2	
11	11243-82091	*	SHEET,SPRING	ｼｰﾄ	2	
12	02100-00040	*	RING,SNAP	ｽﾅｯﾌﾟﾘﾝｸﾞ	2	
13	12N53-82101		GEAR,FORWARD	ｷﾞｬｰ	1	
14	12N53-82111		GEAR,REVERSE	ｷﾞｬｰ	1	
15	02121-00058		RING,SNAP	ｽﾅｯﾌﾟﾘﾝｸﾞ	2	
16	115G3-82351		BEARING	ﾍﾞｱﾘﾝｸﾞ	4	
17	115G3-82361		PLATE,THRUST	ﾌﾟﾚｰﾄ	2	
18	03000-06306		BEARING	ﾍﾞｱﾘﾝｸﾞ	2	
19	11243-82161	*	RING,SEAL	ﾘﾝｸﾞ	4	

FIG.58 CONTROL VALVE (TOR-CON)

(F7Z125C0) コントロールバルブ

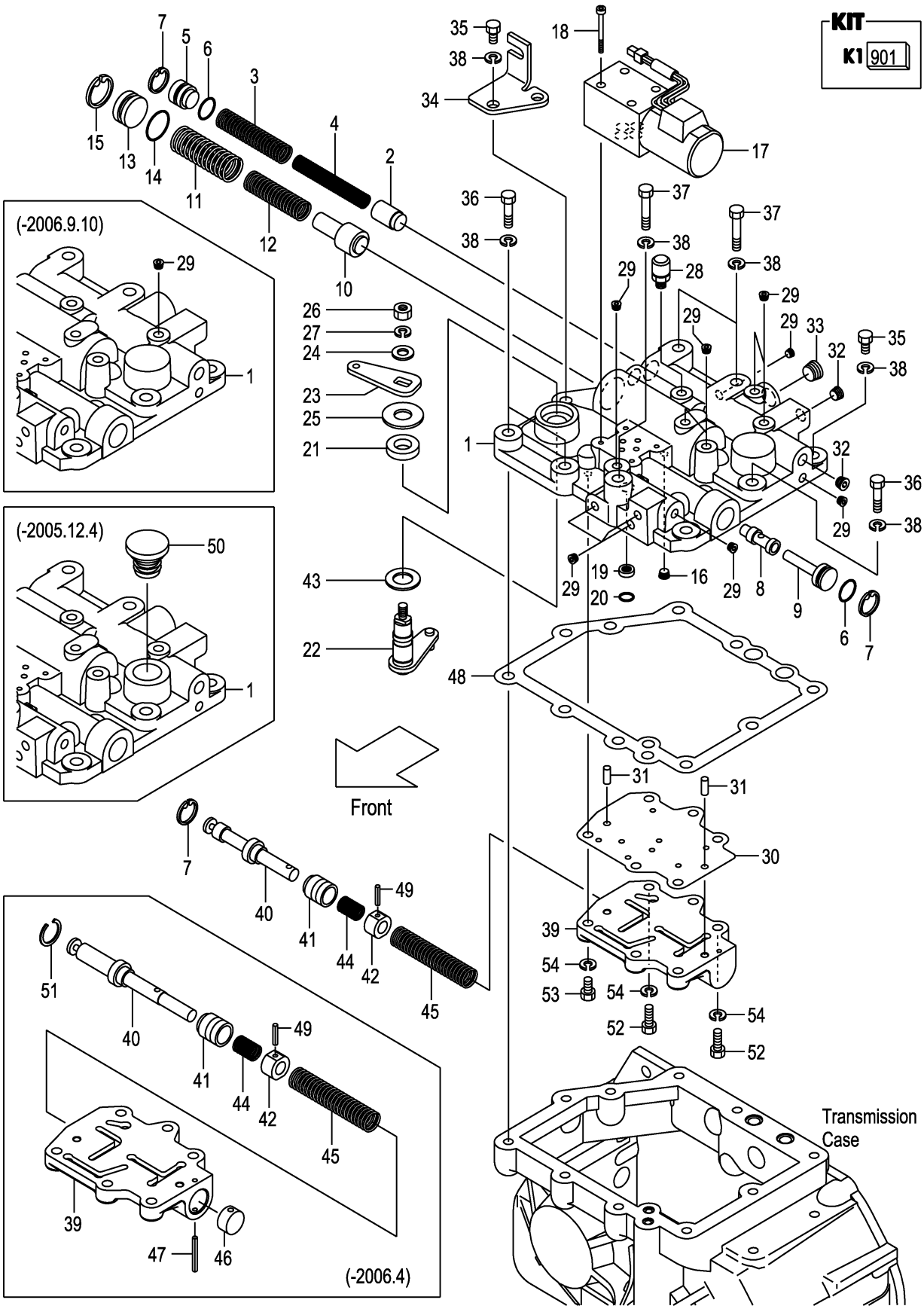

A:FHD15T3Z FHD18T3Z

Item No	Part No.	Mark	Description		Req'd	Remarks : Serial No.
A1	12N53-80341		VALVE-ASSY,CONTROL	ｺﾝﾄﾛｰﾙﾊﾞﾙﾌﾞｱｯｾﾝ	1	INC.1-51
901	12N53-89831	K1	KIT,REPAIR,VALVE	ﾊﾞﾙﾌﾞﾘﾍﾟｱｷｯﾄ	1	INC.6,7,14,15,21,25,30,43, 47,48,51
1	12N53-82221		COVER,CASE	ｶﾊﾞｰ	1	(-2006.4)
-	12N53-82222		COVER,CASE	ｶﾊﾞｰ	1	(2006.5-2006.9.10)
-	12N53-82223		COVER,CASE	ｶﾊﾞｰ	1	(2006.9.11-)
2	12N53-82291		PISTON,MAIN-RELIEF	ﾋﾟｽﾄﾝ	1	
3	15583-82411		SPRING	ｽﾌﾟﾘﾝｸﾞ	1	
4	15583-82421		SPRING	ｽﾌﾟﾘﾝｸﾞ	1	
5	12N53-82371		PLUG,MAIN-RELIEF	ﾌﾟﾗｸﾞ	1	
6	118H3-82231	*	O-RING	Oﾘﾝｸﾞ	2	
7	02110-00022	*	RING,SNAP	ｽﾅｯﾌﾟﾘﾝｸﾞ	2	(-2006.4)
-	02110-00022	*	RING,SNAP	ｽﾅｯﾌﾟﾘﾝｸﾞ	3	(2006.5-)
8	139B3-82121		SPOOL	ｽﾌﾟｰﾙ	1	
9	12N53-82351		PLUG,FR-PISTON	ﾌﾟﾗｸﾞ	1	
10	15583-82441		SPOOL,ACC	ｽﾌﾟｰﾙ	1	
11	15583-82451		SPRING	ｽﾌﾟﾘﾝｸﾞ	1	
12	15583-82461		SPRING	ｽﾌﾟﾘﾝｸﾞ	1	
13	12N53-82361		PLUG,ACC	ﾌﾟﾗｸﾞ	1	
14	12N53-82581	*	O-RING	Oﾘﾝｸﾞ	1	
15	02110-00030	*	RING,SNAP	ｽﾅｯﾌﾟﾘﾝｸﾞ	1	
16	115G3-82671		PLUG,CHOKE	ﾌﾟﾗｸﾞ	1	
17	12N53-82551		VALVE,SOLENOID	ﾊﾞﾙﾌﾞ	1	
18	01170-05045		BOLT	ﾎﾞﾙﾄ	4	
19	12N53-82531		FILTER,COIN	ﾌｨﾙﾀ	1	
20	12N53-82571		O-RING	Oﾘﾝｸﾞ	1	
21	12N53-82251	*	SEAL,OIL	ｼｰﾙ	1	
22	12N53-82421		LINK,INCHING	ﾘﾝｸ	1	
23	12N53-82451		PLATE,INCHING	ﾌﾟﾚｰﾄ	1	
24	23656-42601		WASHER	ﾜｯｼｬ	1	
25	12N53-82781	*	WASHER	ﾜｯｼｬ	1	
26	01400-00008		NUT	ﾅｯﾄ	1	
27	02011-00008		WASHER	ﾜｯｼｬ	1	
28	15573-42151		BREATHER,AIR	ﾌﾞﾘｰｻﾞ	1	
29	116H3-82201		PLUG	ﾌﾟﾗｸﾞ	10	(-2006.9.10)
-	116H3-82201		PLUG	ﾌﾟﾗｸﾞ	11	(2006.9.11-)
30	12N53-82721	*	PLATE,SEPARATE	ﾌﾟﾚｰﾄ	1	
31	02212-06016		PIN,PARALLEL	ﾋﾟﾝ	2	
32	116H3-82101		PLUG	ﾌﾟﾗｸﾞ	2	
33	24329-45541		PLUG	ﾌﾟﾗｸﾞ	1	
34	12N53-82741		BRACKET,LINK	ﾌﾞﾗｹｯﾄ	1	
35	01103-10030		BOLT	ﾎﾞﾙﾄ	4	
36	01103-10040		BOLT	ﾎﾞﾙﾄ	3	
37	01103-10060		BOLT	ﾎﾞﾙﾄ	3	
38	02011-00010		WASHER	ﾜｯｼｬ	10	
39	12N53-82231		BODY,VALVE	ﾎﾞﾃﾞｨ	1	(-2006.4)
-	12N53-82232		BODY,VALVE	ﾎﾞﾃﾞｨ	1	(2006.5-)
40	12N53-82731		SPOOL,INCHING	ｽﾌﾟｰﾙ	1	(-2006.4)
-	12N53-82732		SPOOL,INCHING	ｽﾌﾟｰﾙ	1	(2006.5-)
41	12N53-82321		PLUNGER	ﾌﾟﾗﾝｼﾞｬ	1	

FIG.58 CONTROL VALVE (TOR-CON)

(F7Z125C0) コントロールバルブ

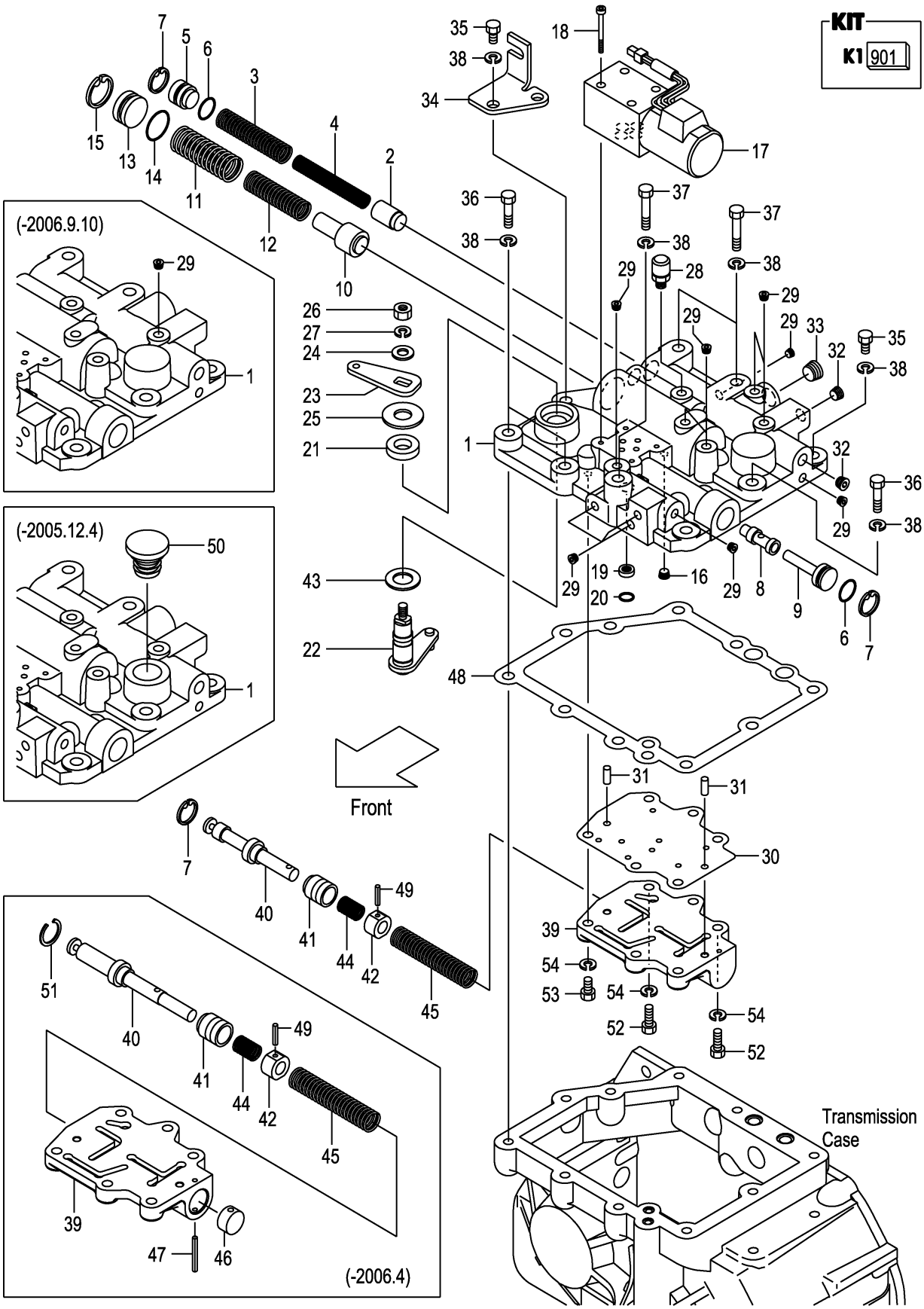

A:FHD15T3Z FHD18T3Z

Item No	Part No.	Mark	Description		Req'd	Remarks : Serial No.
42	12N53-82331		PISTON	ﾋﾟｽﾄﾝ	1	
43	12N53-82771	*	WASHER	ﾜｯｼｬ	1	
44	12N53-82501		SPRING	ｽﾌﾟﾘﾝｸﾞ	1	
45	12N53-82481		SPRING	ｽﾌﾟﾘﾝｸﾞ	1	
46	12N53-82401		PLUG	ﾌﾟﾗｸﾞ	1	(-2006.4)
47	02270-04035	*	PIN,SPRING	ﾋﾟﾝ	1	(-2006.4)
48	12N53-82701	*	GASKET,CASE-COVER	ｶﾞｽｹｯﾄ	1	
49	02270-04020		PIN,SPRING	ﾋﾟﾝ	1	
50	12N53-82751		CAP,OIL	ｷｬｯﾌﾟ	1	(-2005.12.4)
51	12N53-82791	*	RING,SNAP	ｽﾅｯﾌﾟﾘﾝｸﾞ	1	(-2006.4)
52	01103-08040		BOLT	ﾎﾞﾙﾄ	2	
53	01103-08030		BOLT	ﾎﾞﾙﾄ	4	
54	02011-00008		WASHER	ﾜｯｼｬ	6	

FIG.59 DRIVE AXLE

(F7Z13010) ﾄﾞﾗｲﾌﾞｱｸｽﾙ

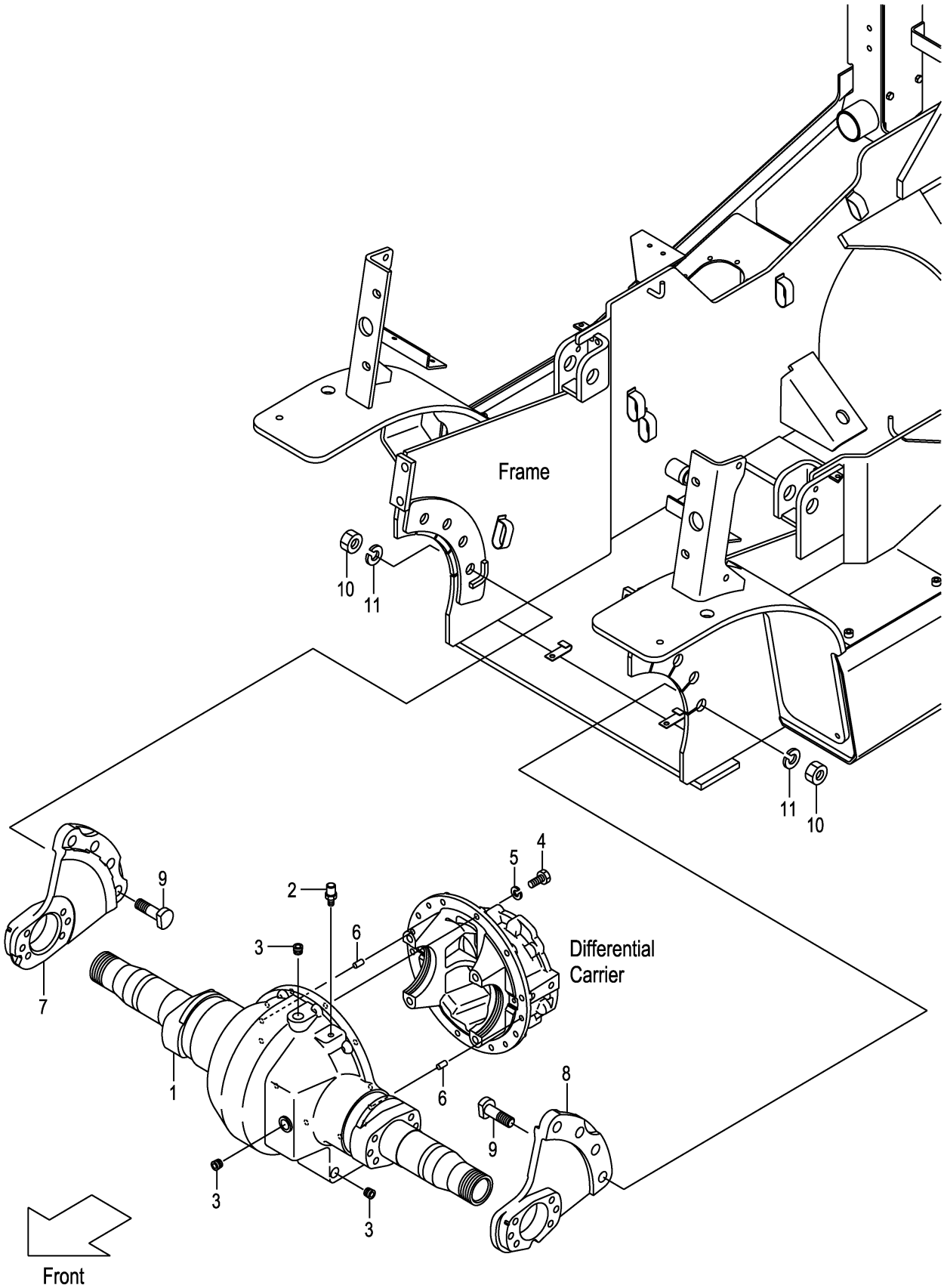

A:FHD15C3Z FHD15T3Z FHD18C3Z FHD18T3Z

Item No	Part No.	Mark	Description		Req'd	Remarks : Serial No.
1	20A73-00301		HOUSING,AXLE	ﾊｳｼﾞﾝｸﾞ	1	
2	15573-42151		BREATHER,AIR	ﾌﾞﾘｰｻﾞ	1	
3	22193-03001		PLUG	ﾌﾟﾗｸﾞ	3	
4	01106-10035		BOLT	ﾎﾞﾙﾄ	10	
5	02011-00010		WASHER	ﾜｯｼｬ	10	
6	02212-10020		PIN,PARALLEL	ﾋﾟﾝ	2	
7	20A73-00501		SUPPORT,AXLE,RH	ｻﾎﾟｰﾄ	1	
8	20A73-00511		SUPPORT,AXLE,LH	ｻﾎﾟｰﾄ	1	
9	22N53-02151		BOLT	ﾎﾞﾙﾄ	8	
10	01400-10020		NUT	ﾅｯﾄ	8	
11	02011-00020		WASHER	ﾜｯｼｬ	8	

FIG.60 DRUM HUB

(F7Z13020) ﾄﾞﾗﾑﾊﾌﾞ

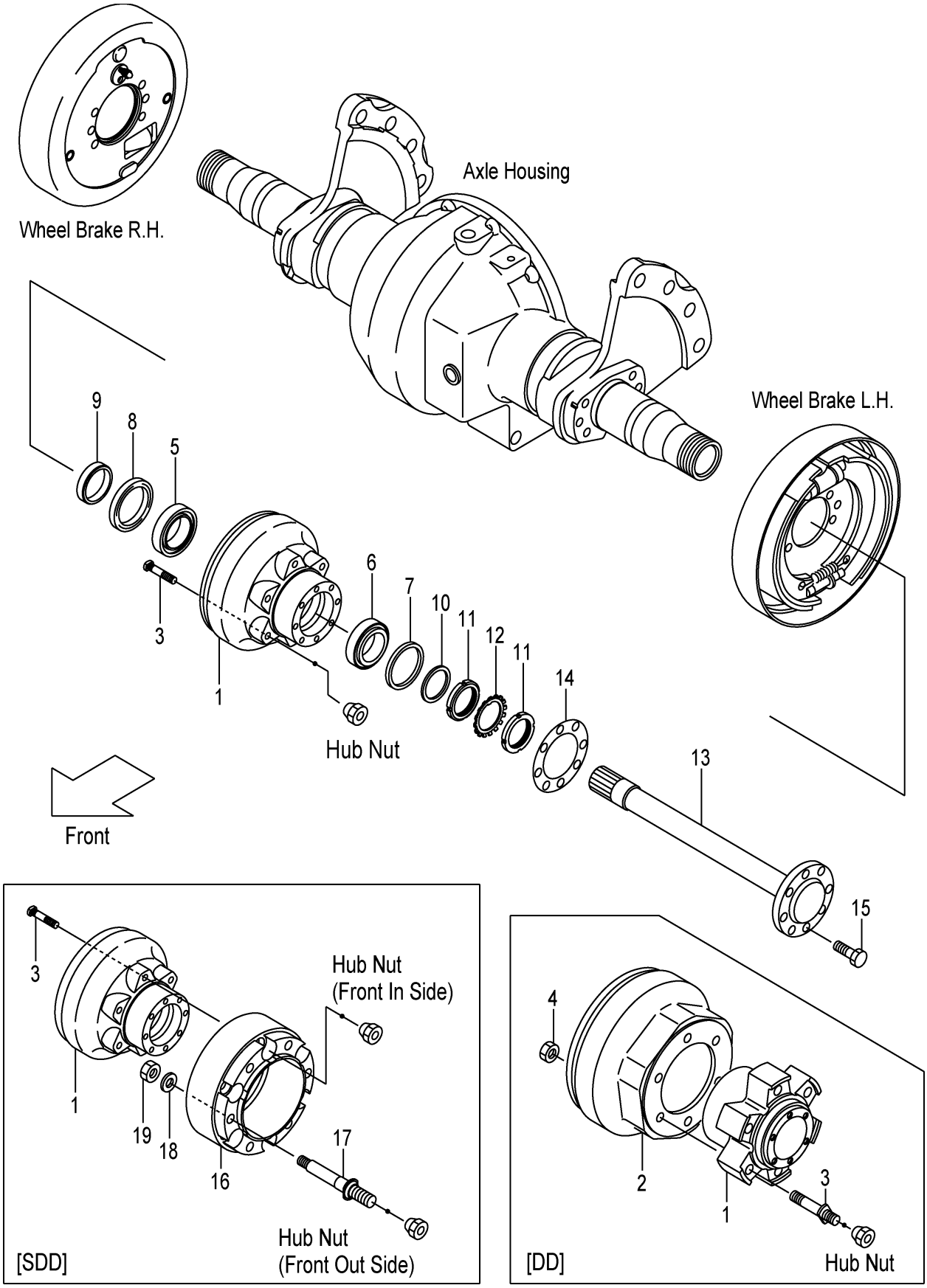

FIG.60

(F7Z13020)

A:FHD15C3Z FHD15T3Z FHD18C3Z FHD18T3Z

Item No	Part No.	Mark	Description		Req'd	Remarks : Serial No.
1	216G3-02051		HUB & DRUM	ﾊﾌﾞ&ﾄﾞﾗﾑ	2	
-	54237-42042		HUB,FRONT	ﾊﾌﾞ	2	[DD]
2	54237-42072		DRUM,BRAKE	ﾄﾞﾗﾑ	2	[DD]
3	216G3-02061		BOLT,HUB	ﾎﾞﾙﾄ	12	
-	54237-42061		BOLT,HUB	ﾎﾞﾙﾄ	12	[DD]
4	01400-10012		NUT	ﾅｯﾄ	12	[DD]
5	03071-30213		BEARING	ﾍﾞｱﾘﾝｸﾞ	2	
6	23453-02071		BEARING	ﾍﾞｱﾘﾝｸﾞ	2	INC.7
7	23453-02131		SEAL,OIL	ｼｰﾙ	2	
8	23653-02001		SEAL,OIL	ｼｰﾙ	2	
9	22513-02051		RETAINER	ﾘﾃｰﾅ	2	
10	23453-02091		WASHER	ﾜｯｼｬ	2	
11	03192-00012		NUT,BRG	ﾅｯﾄ	4	
12	03192-10012		WASHER,BRG	ﾜｯｼｬ	2	
13	24843-02011		SHAFT,DRIVE	ｼｬﾌﾄ	2	
14	24843-02062		PACKING	ﾊﾟｯｷﾝｸﾞ	2	
15	24453-02061		BOLT,REAMER	ﾎﾞﾙﾄ	16	
16	54237-43001		SPACER	ｽﾍﾟｰｻ	2	[SDD]
17	54237-43011		BOLT,HUB	ﾎﾞﾙﾄ	12	[SDD]
18	02000-00012		WASHER	ﾜｯｼｬ	12	[SDD]
19	01400-10012		NUT	ﾅｯﾄ	12	[SDD]

FIG.61 PROPELLER SHAFT

(F7Z13310) ﾌﾟﾛﾍﾟﾗｼｬﾌﾄ

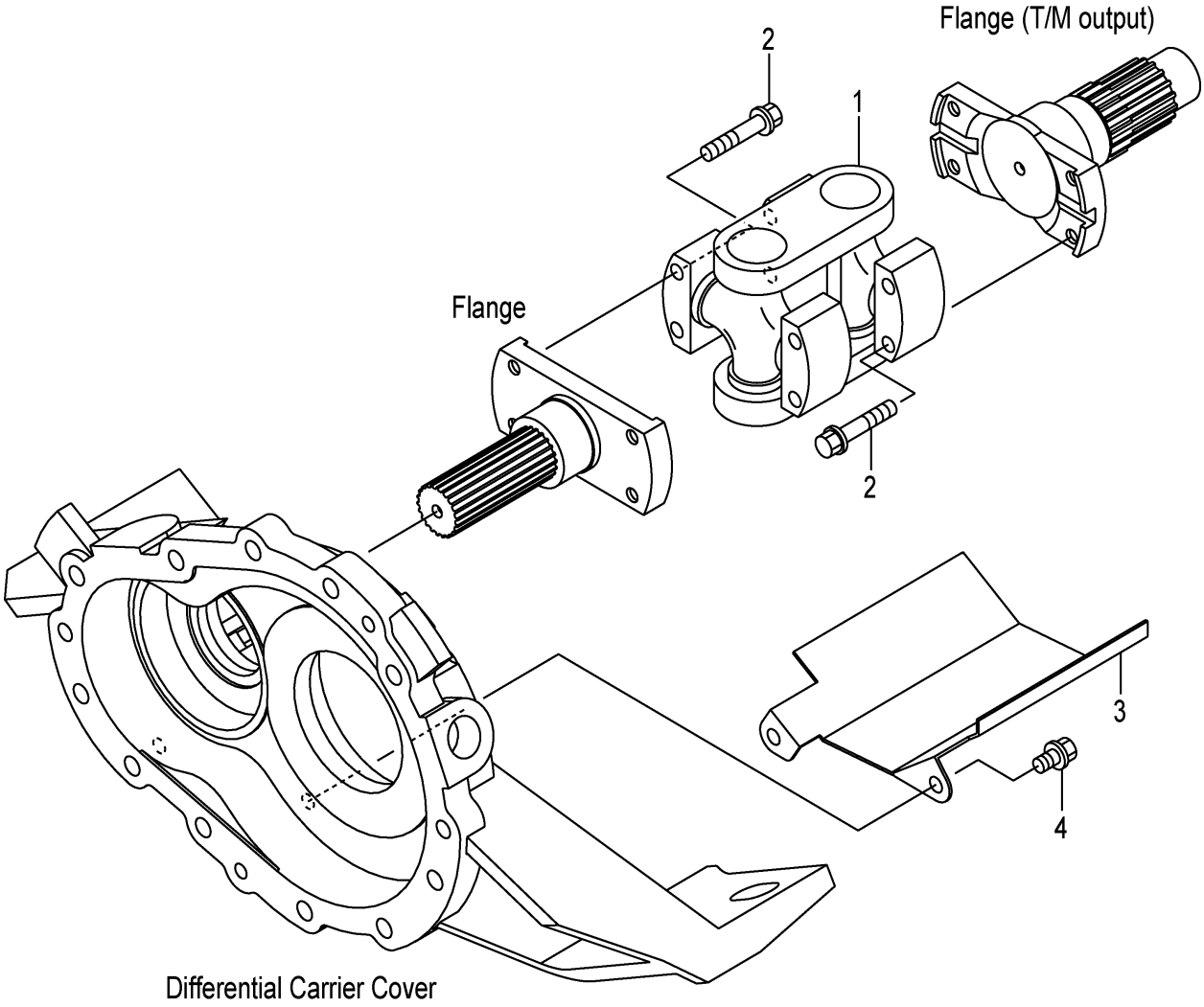

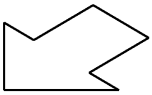

Front

FIG.61

(F7Z13310)

A:FHD15C3Z FHD15T3Z FHD18C3Z FHD18T3Z

Item No	Part No.	Mark	Description	Req'd	Remarks : Serial No.
1	12N53-32001		SHAFT,PROPELLER ｼｬﾌﾄ	1	
2	12N53-82641		BOLT,FLANGE ﾎﾞﾙﾄ	8	
3	12N53-32011		COVER,PROPEL-SHAFT ｶﾊﾞｰ	1	
4	12N53-82621		BOLT,FLANGE ﾎﾞﾙﾄ	2	

FIG.62 REDUCTION & DIFFERENTIAL

(F7Z13510) ﾘﾀﾞｸｼｮﾝ&ﾃﾞﾌｧﾚﾝｼｬﾙ

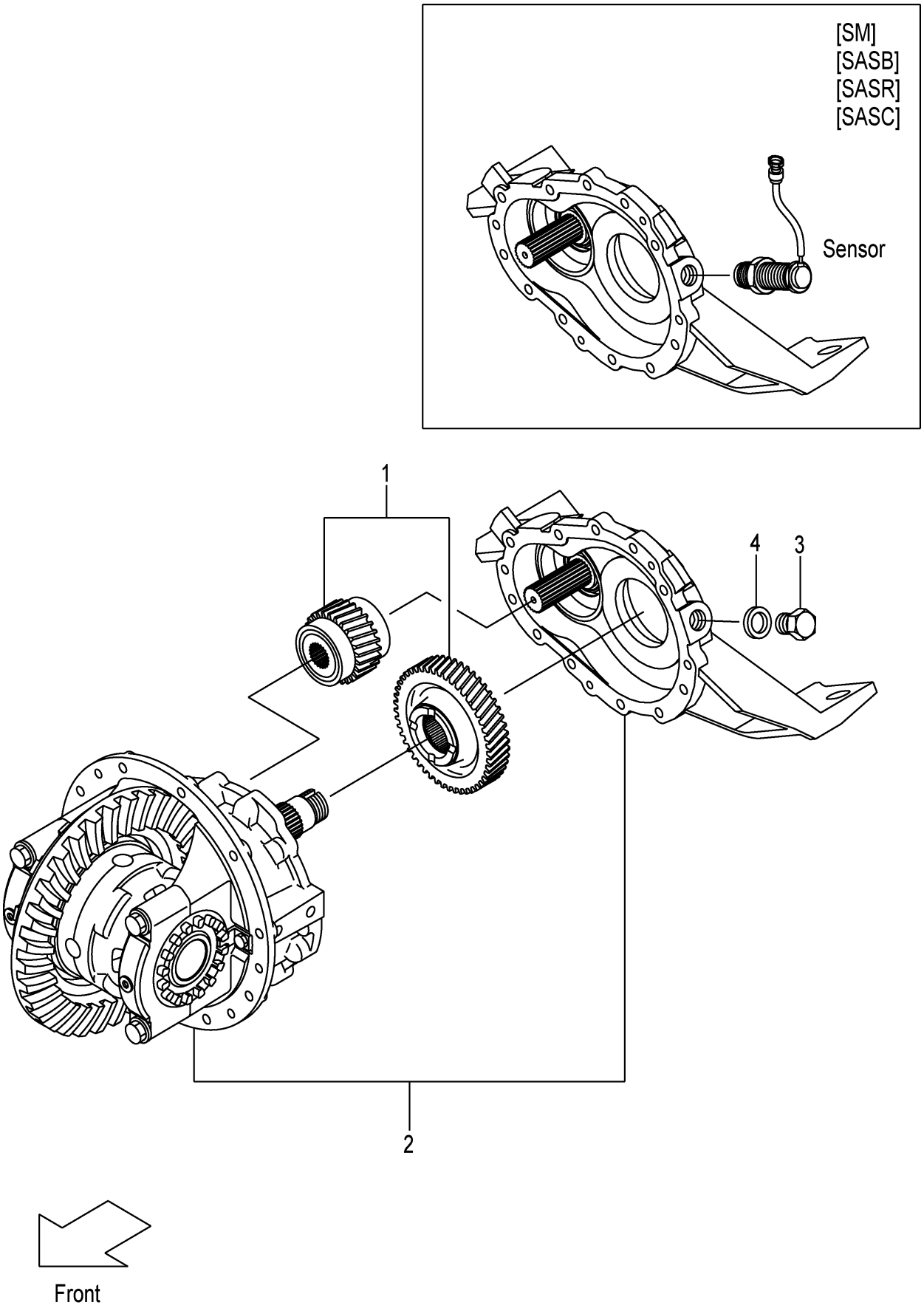

A:FHD15C3Z FHD15T3Z FHD18C3Z FHD18T3Z

Item No	Part No.	Mark	Description		Req'd	Remarks : Serial No.
A1	10B73-50201		DIFFERENTIAL-ASSY	ﾃﾞﾌｧﾚﾝｼｬﾙｱｯｾﾝ	1	INC.1,2
1	NO PART NO.		REDUCTION	ﾘﾀﾞｸｼｮﾝ	1	SEE FIG.63
2	NO PART NO.		DIFFERENTIAL	ﾃﾞﾌｧﾚﾝｼｬﾙ	1	SEE FIG.64
3	124T3-42651		BOLT	ﾎﾞﾙﾄ	1	(WITHOUT SM,SASB,SASR,SASC)
4	124T3-42661		PACKING	ﾊﾟｯｷﾝｸﾞ	1	(WITHOUT SM,SASB,SASR,SASC)

FIG.63 REDUCTION

(F7Z13520) ﾘﾀﾞｸｼｮﾝ

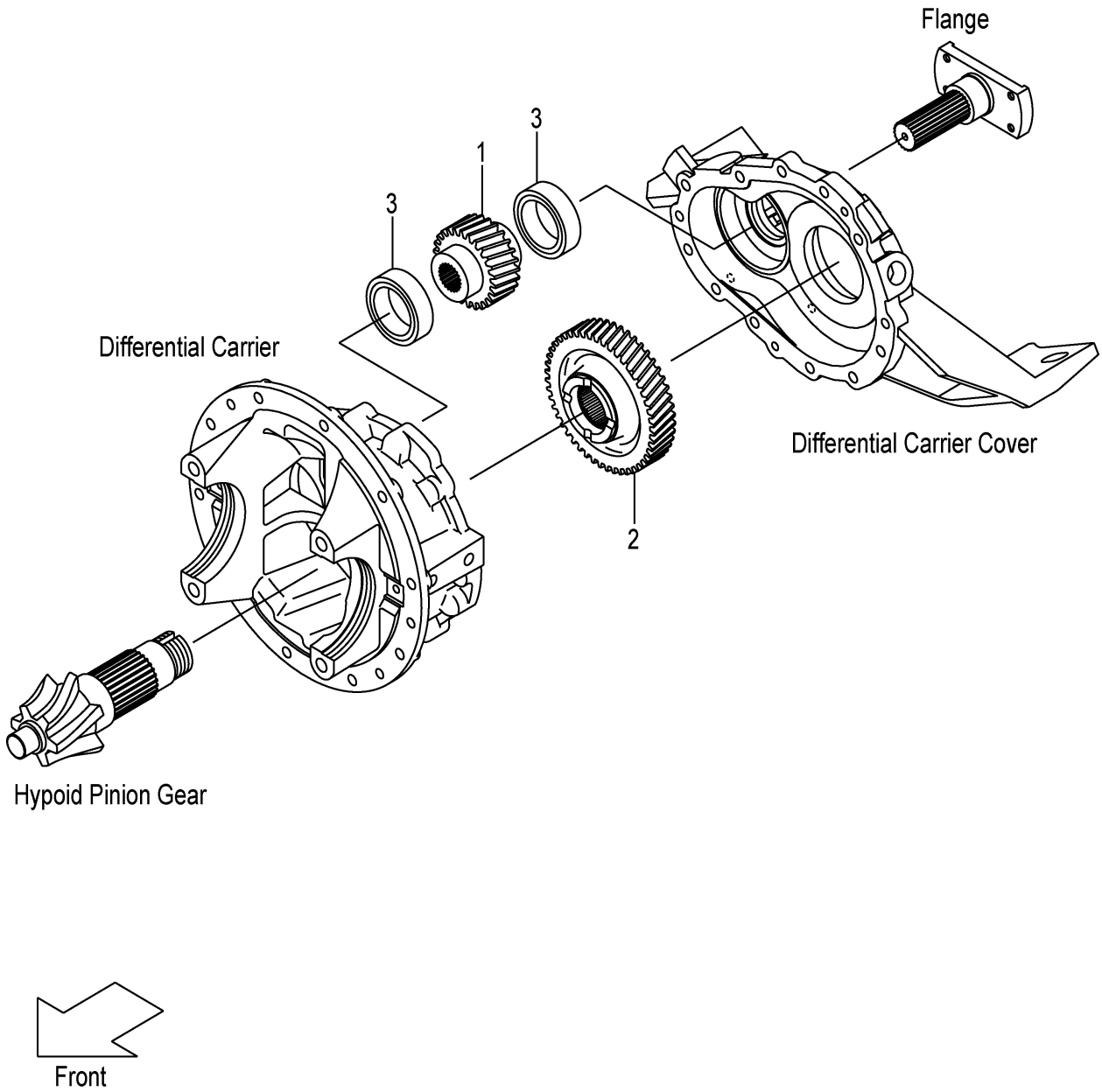

FIG.63

(F7Z13520)

A:FHD15C3Z FHD15T3Z FHD18C3Z FHD18T3Z

Item No	Part No.	Mark	Description	Req'd	Remarks : Serial No.
1	10B73-22001		GEAR,REDUCTION ｷﾞｬｰ	1	
2	10B73-22011		GEAR,REDUCTION ｷﾞｬｰ	1	
3	03000-06210		BEARING ﾍﾞｱﾘﾝｸﾞ	2	

FIG.64 DIFFERENTIAL

(F7Z13530) デ゛ファレンシャル

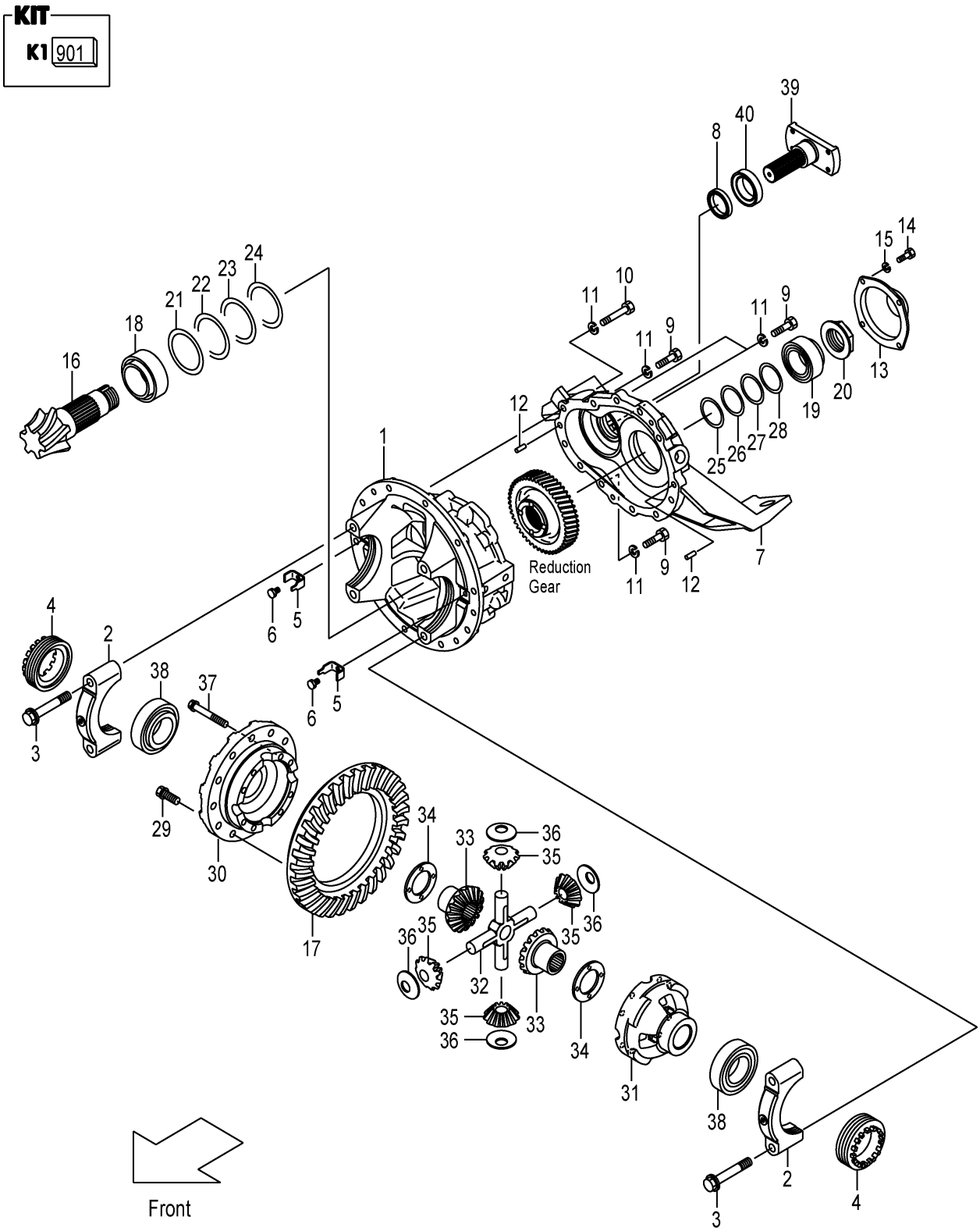

A:FHD15C3Z FHD15T3Z FHD18C3Z FHD18T3Z

Item No	Part No.	Mark	Description		Req'd	Remarks : Serial No.
901	10A73-59821	K1	KIT,OVERHAUL,DIFF	ｵｰﾊﾞﾎｰﾙｷｯﾄ	1	INC.5,8,20-28,34,36
A1	10A73-50301		CARRIER & CAP-ASSY	ｷｬﾘｱ&ｷｬｯﾌﾟｱｯｾﾝ	1	INC.1-3
1	NO PART NO.	#	CARRIER,DIFFERENTIAL	ｷｬﾘﾔ	1	
2	NO PART NO.	#	CAP,BRG	ｷｬｯﾌﾟ	2	
3	10A73-52071		BOLT,REAMER	ﾎﾞﾙﾄ	4	
4	10A73-52231		NUT,ADJUST	ﾅｯﾄ	2	
5	10A73-52201	*	PLATE,LOCK	ﾌﾟﾚｰﾄ	2	
6	01185-08016		BOLT,FLANGE	ﾎﾞﾙﾄ	2	
7	12N53-52031		COVER,DIFF-CARRIER	ｶﾊﾞｰ	1	
8	12N53-52251	*	SEAL,OIL	ｼｰﾙ	1	
9	01106-10030		BOLT	ﾎﾞﾙﾄ	4	
10	01106-10060		BOLT	ﾎﾞﾙﾄ	7	
11	02011-00010		WASHER	ﾜｯｼｬ	11	
12	02212-10020		PIN,PARALLEL	ﾋﾟﾝ	2	
13	12N53-52111		COVER,PINION	ｶﾊﾞｰ	1	
14	01103-08016		BOLT	ﾎﾞﾙﾄ	4	
15	02011-00008		WASHER	ﾜｯｼｬ	4	
A2	10A73-59801		GEAR-ASSY,HYPOID	ﾊｲﾎﾟｲﾄﾞｷﾞｬｰｱｯｾﾝ	1	INC.16,17
16	NO PART NO.	#	GEAR,PINION,LH	ｷﾞｬｰ	1	
17	NO PART NO.	#	GEAR,RING,RH	ｷﾞｬｰ	1	
18	14603-52121		BEARING	ﾍﾞｱﾘﾝｸﾞ	1	
19	12N53-52231		BEARING	ﾍﾞｱﾘﾝｸﾞ	1	
20	12N53-52101	*	NUT,PINION	ﾅｯﾄ	1	
21	10A73-52121	*	SHIM,T-0.1	ｼﾑ	1	
22	10A73-52131	*	SHIM,T-0.15	ｼﾑ	1	
23	10A73-52141	*	SHIM,T-0.2	ｼﾑ	2	
24	10A73-52161	*	SHIM,T-0.5	ｼﾑ	1	
25	12N53-52171	*	SHIM,T-0.1	ｼﾑ	1	
26	12N53-52271	*	SHIM,T-0.15	ｼﾑ	1	
27	12N53-52181	*	SHIM,T-0.2	ｼﾑ	2	
28	12N53-52191	*	SHIM,T-0.5	ｼﾑ	1	
29	10A73-52101		BOLT,FLANGE	ﾎﾞﾙﾄ	12	
A3	10A73-59811		CASE-ASSY,CROSS	ｸﾛｽｹｰｽｱｯｾﾝ	1	INC.30,31
30	NO PART NO.	#	CASE,CROSS,RH	ｹｰｽ	1	
31	NO PART NO.	#	CASE,CROSS,LH	ｹｰｽ	1	
32	110F3-52111		SPIDER	ｽﾊﾟｲﾀﾞ	1	
33	110F3-52001		GEAR,SIDE	ｷﾞｬｰ	2	
34	20113-50181	*	WASHER,THRUST	ﾜｯｼｬ	2	
35	110F3-52011		GEAR,PINION	ｷﾞｬｰ	4	
36	15413-52081	*	WASHER,THRUST,T-2.0	ﾜｯｼｬ	4	
37	10A73-52081		BOLT,FLANGE	ﾎﾞﾙﾄ	8	
38	10A73-52091		BEARING	ﾍﾞｱﾘﾝｸﾞ	2	
39	12N53-52091		FLANGE,4C	ﾌﾗﾝｼﾞ	1	
40	12N53-52121		COVER,DUST	ｶﾊﾞｰ	1	

FIG.65 WHEEL BRAKE

(F7Z13710) ホイールブレーキ

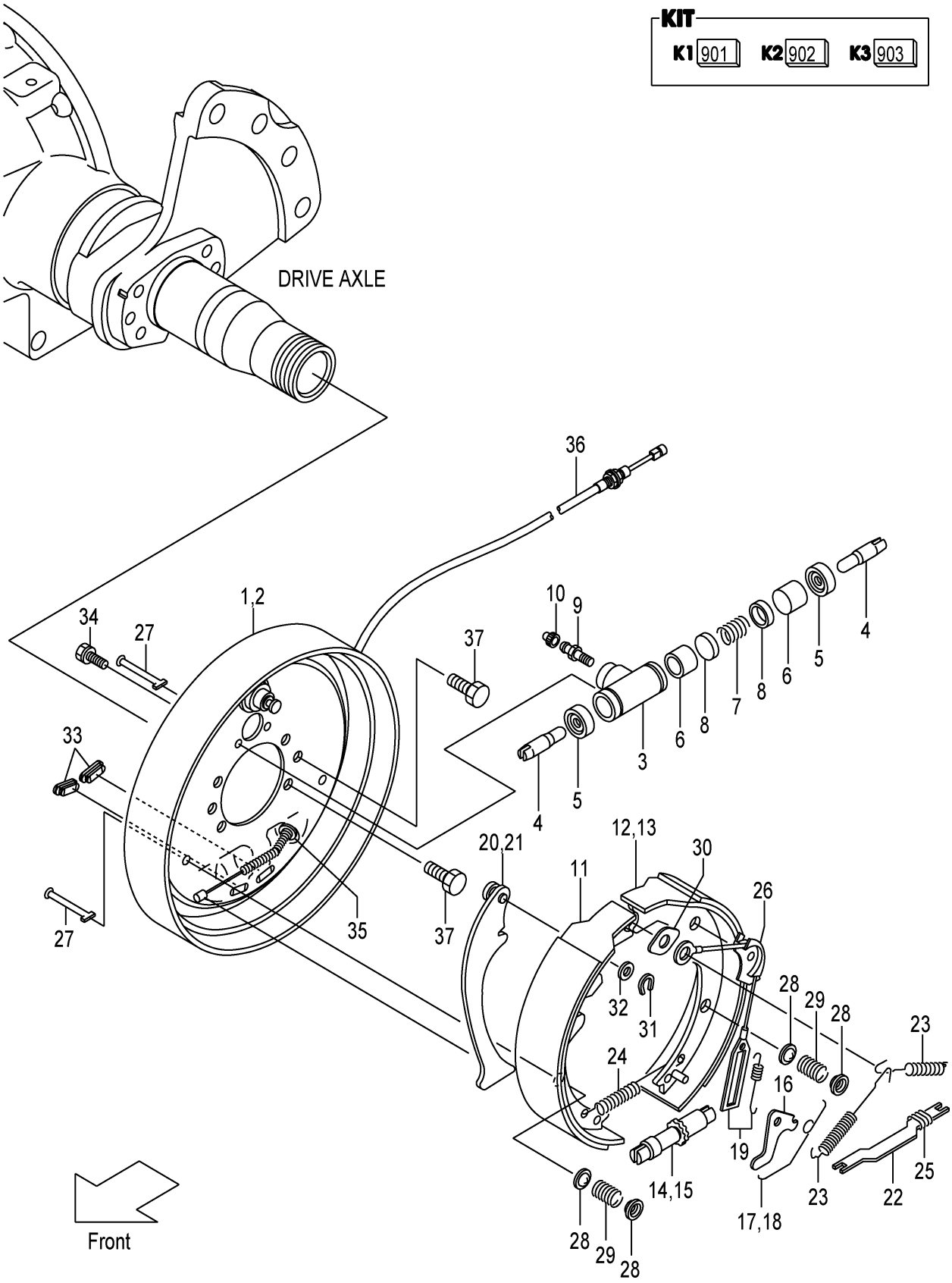

A:FHD15C3Z FHD15T3Z FHD18C3Z FHD18T3Z

Item No	Part No.	Mark	Description		Req'd	Remarks : Serial No.
A1	20A73-70101		BRAKE-ASSY,WHEEL,RH	ﾎｲｰﾙﾌﾞﾚｰｷｱｯｾﾝ	1	INC.1,3-12,14,16,17,19,20, 22-36
A2	20A73-70201		BRAKE-ASSY,WHEEL,LH	ﾎｲｰﾙﾌﾞﾚｰｷｱｯｾﾝ	1	INC.2-11,13,15,16,18,19,21-36
901	C-K2-11036-83022	K1	KIT,SHOE,RH	ｼｭｰｷｯﾄ	1	INC.11,12
902	C-K2-11036-83012	K2	KIT,SHOE,LH	ｼｭｰｷｯﾄ	1	INC.11,13
1	C-52-11031-21001		PLATE,RH	ﾌﾟﾚｰﾄ	1	
2	C-52-11031-11001		PLATE,LH	ﾌﾟﾚｰﾄ	1	
A3	C-52-11029-52000		CYL-ASSY,WHEEL	ﾎｲｰﾙｼﾘﾝﾀﾞｱｯｾﾝ	2	INC.3-10
903	23453-79801	K3	KIT,REPAIR	ﾘﾍﾟｱｷｯﾄ	2	INC.5-8
3	NO PART NO.	#	CYLINDER	ｼﾘﾝﾀﾞ	2	
4	C-52-11003-02380		LINK	ﾘﾝｸ	4	
5	NO PART NO.	#*	BOOT	ﾌﾞｰﾂ	4	
6	NO PART NO.	#*	PISTON	ﾋﾟｽﾄﾝ	4	
7	NO PART NO.	#*	SPRING	ｽﾌﾟﾘﾝｸﾞ	2	
8	NO PART NO.	#*	CUP	ｶｯﾌﾟ	4	
9	C-51-B2101-02322		SCREW	ｽｸﾘｭ	2	
10	C-52-30780-02340		CAP,BLEEDER	ｷｬｯﾌﾟ	2	
11	NO PART NO.	#*	SHOE & LINING	ｼｭｰ & ﾗｲﾆﾝｸﾞ	2	
12	NO PART NO.	#*	SHOE & LINING,RH	ｼｭｰ & ﾗｲﾆﾝｸﾞ	1	
13	NO PART NO.	#*	SHOE & LINING,LH	ｼｭｰ & ﾗｲﾆﾝｸﾞ	1	
14	C-52-11044-23300		SCREW,ADJUST,RH	ｽｸﾘｭ	1	
15	C-52-11044-13300		SCREW,ADJUST,LH	ｽｸﾘｭ	1	
16	C-52-10910-05150		LEVER	ﾚﾊﾞｰ	2	
17	C-52-11036-25160		SPRING,RH	ｽﾌﾟﾘﾝｸﾞ	1	
18	C-52-11036-15160		SPRING,LH	ｽﾌﾟﾘﾝｸﾞ	1	
19	20803-71081		SPRING & CABLE	ｽﾌﾟﾘﾝｸﾞ & ｹｰﾌﾞﾙ	2	
20	C-52-11005-44500		LEVER,PARKING,RH	ﾚﾊﾞｰ	1	
21	C-52-11005-34500		LEVER,PARKING,LH	ﾚﾊﾞｰ	1	
22	C-52-11003-64530		STRUT	ｽﾄﾗｯﾄ	2	
23	C-52-11003-04010		SPRING	ｽﾌﾟﾘﾝｸﾞ	4	
24	C-52-11036-54070		SPRING	ｽﾌﾟﾘﾝｸﾞ	2	
25	C-52-11036-54540		SPRING	ｽﾌﾟﾘﾝｸﾞ	2	
26	C-52-11003-05140		GUIDE,CABLE	ｶﾞｲﾄﾞ	2	
27	C-52-10906-04160		PIN	ﾋﾟﾝ	4	
28	C-52-10927-04130		CUP	ｶｯﾌﾟ	8	
29	C-52-11101-04111		SPRING	ｽﾌﾟﾘﾝｸﾞ	4	
30	C-52-11201-01270		PLATE,SHOE-GUIDE	ﾌﾟﾚｰﾄ	2	
31	C-52-10901-64560		RETAINER	ﾘﾃｰﾅ	2	
32	C-52-10901-64550		WASHER,WAVE	ﾜｯｼｬ	2	
33	C-52-11204-69010		COVER	ｶﾊﾞｰ	4	
34	C-90-0527-0616		BOLT	ﾎﾞﾙﾄ	4	
35	C-90-9200-0800		E-RING	Eﾘﾝｸﾞ	2	
36	C-52-11036-24603		CABLE,PARKING	ｹｰﾌﾞﾙ	2	
37	22N53-02212		BOLT	ﾎﾞﾙﾄ	12	

FIG.66 STEERING WHEEL UNIT

(F7Z14110) ステアリング゛ホイールユニット

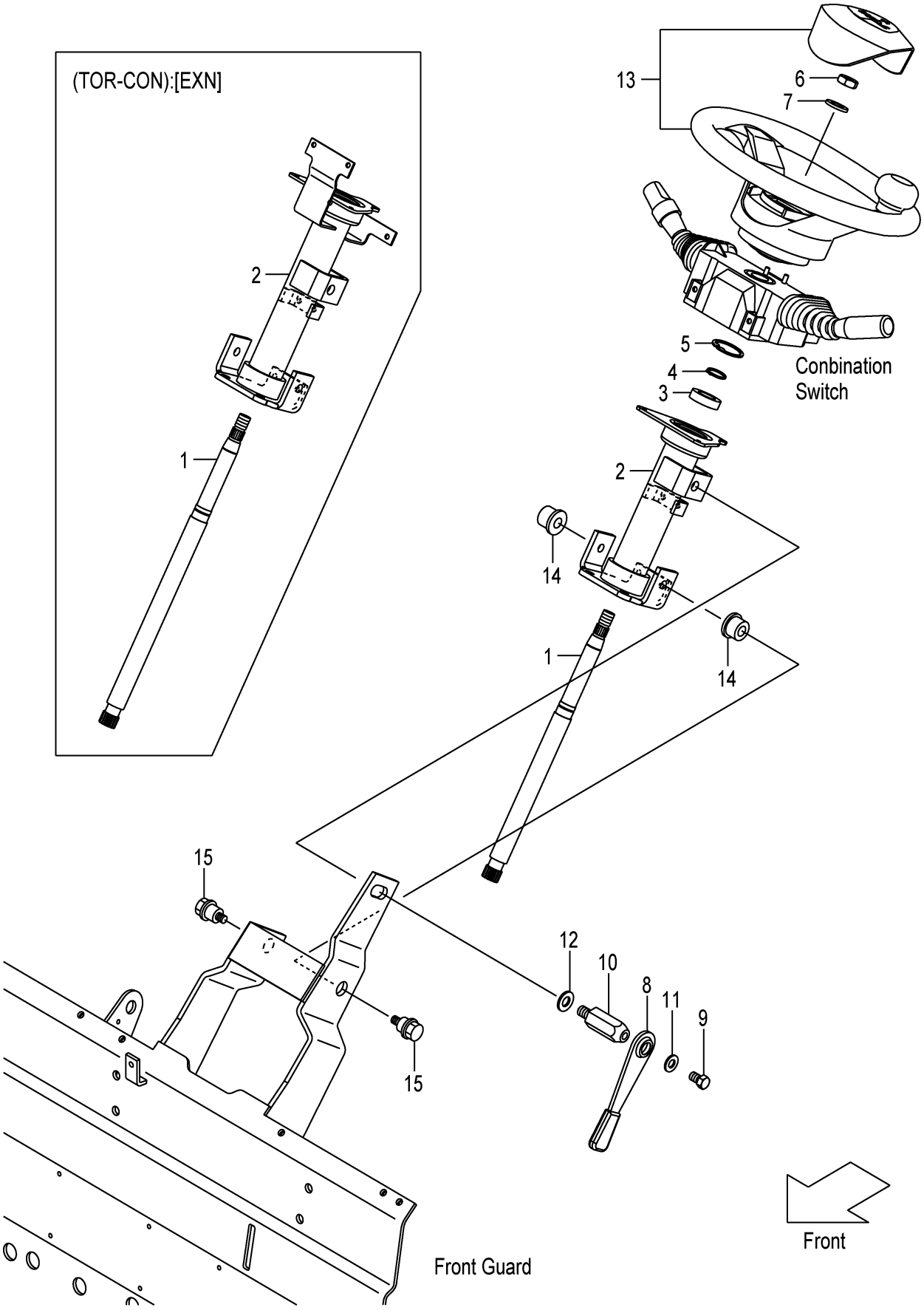

A:FHD15C3Z FHD15T3Z FHD18C3Z FHD18T3Z

Item No	Part No.	Mark	Description		Req'd	Remarks : Serial No.
1	22N54-12011		SHAFT,STEERING	ｼｬﾌﾄ	1	
2	22N54-12022		TUBE,STEERING-COLUMN	ﾁｭｰﾌﾞ	1	
3	03020-06904		BEARING	ﾍﾞｱﾘﾝｸﾞ	1	
4	02100-00020		RING,SNAP	ｽﾅｯﾌﾟﾘﾝｸﾞ	1	
5	02110-00037		RING,SNAP	ｽﾅｯﾌﾟﾘﾝｸﾞ	1	
6	01402-10014		NUT	ﾅｯﾄ	1	
7	02000-00014		WASHER	ﾜｯｼｬ	1	
A1	239A4-12402		LEVER-ASSY,TILT-LOCK	ﾃｨﾙﾄﾛｯｸﾚﾊﾞｰｱｯｾﾝ	1	INC.8-11
8	239A4-12411		LEVER	ﾚﾊﾞｰ	1	
9	239A4-12441		BOLT	ﾎﾞﾙﾄ	1	
10	239A4-12431		BOLT,LOCK	ﾎﾞﾙﾄ	1	
11	214A4-12161		WASHER	ﾜｯｼｬ	1	
12	02000-00012		WASHER	ﾜｯｼｬ	1	
13	22N54-10201		WHEEL,STEERING	ﾎｲｰﾙ	1	SEE FIG.67
14	216G4-12101		BUSHING	ﾌﾞｯｼﾝｸﾞ	2	
15	216G4-12111		BOLT	ﾎﾞﾙﾄ	2	

FIG.67 STEERING WHEEL

(F7Z14120) ｽﾃｱﾘﾝｸﾞﾎｲｰﾙ

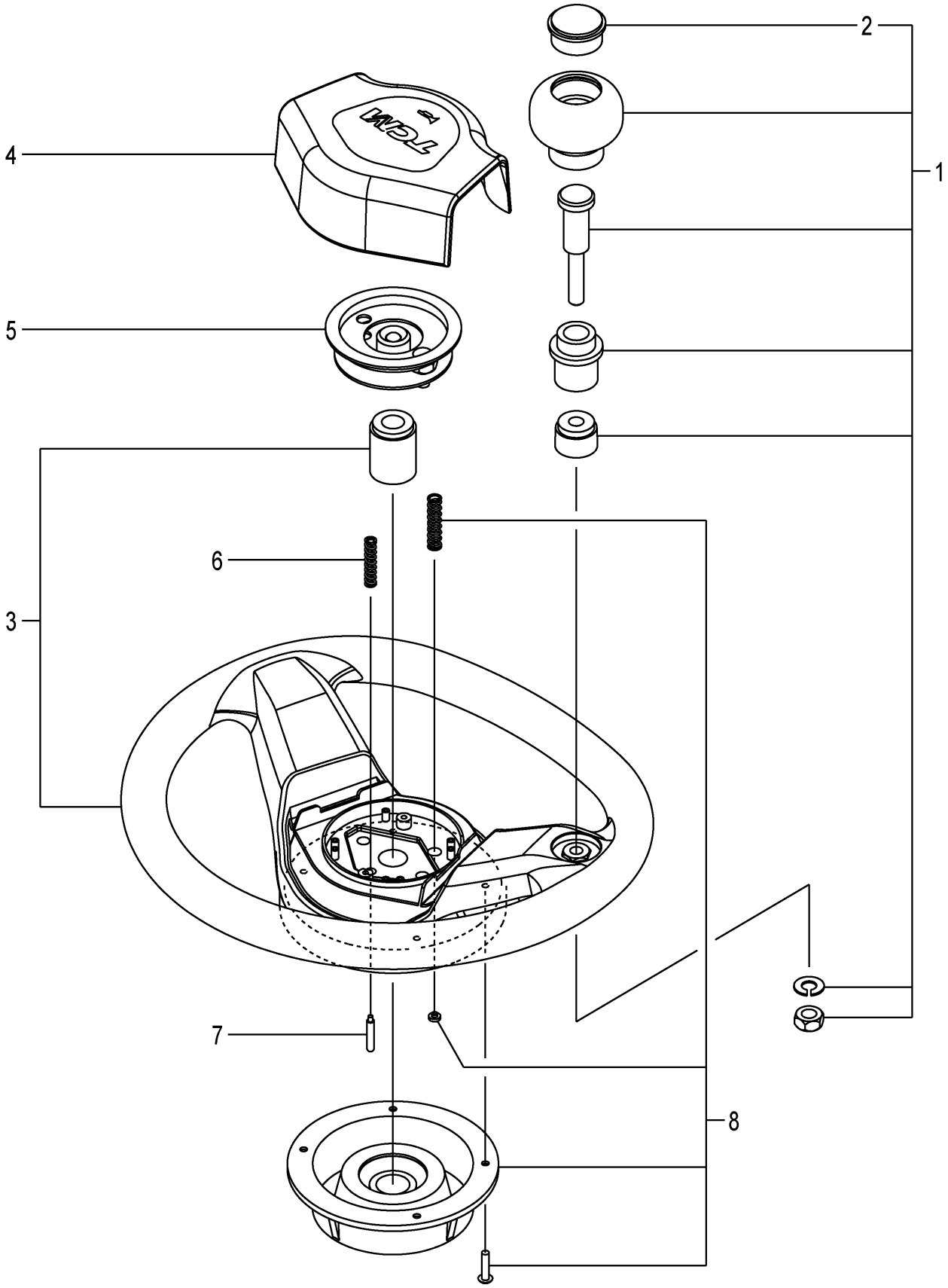

FIG.67

(F7Z14120)

A:FHD15C3Z FHD15T3Z FHD18C3Z FHD18T3Z

Item No	Part No.	Mark	Description		Req'd	Remarks : Serial No.
A1	22N54-10201		WHEEL-ASSY,STEERING	ｽﾃｱﾘﾝｸﾞﾎｲｰﾙｱｯｾﾝ	1	INC.1-8
1	216G4-12681		KNOB	ﾉﾌﾞ	1	INC.2
2	216G4-12711		CAP	ｷｬｯﾌﾟ	1	
3	NO PART NO.	#	WHEEL,STEERING	ﾎｲｰﾙ	1	
4	22N54-12411		PAD,HORN	ﾊﾟｯﾄﾞ	1	
5	22N54-13001		SWITCH	ｽｲｯﾁ	1	
6	22N54-13031		SPRING	ｽﾌﾟﾘﾝｸﾞ	1	
7	22N54-13021		PLUNGER	ﾌﾟﾗﾝｼﾞｬ	1	
8	209K4-12551		COVER,CANCEL-CAM	ｶﾊﾞｰ	1	

FIG.68 ORBITROL

(F7Z14130) オービットロール

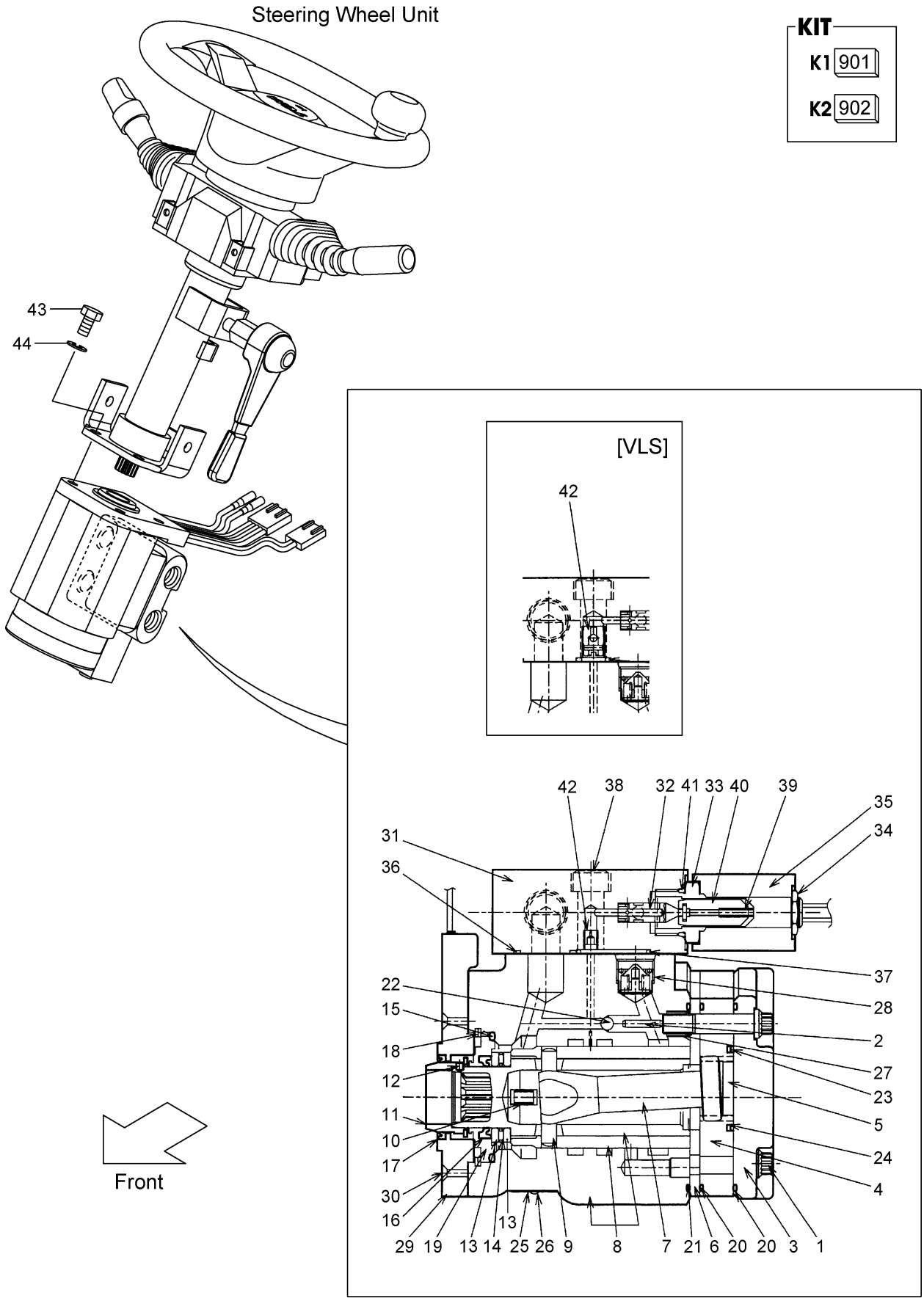

A:FHD15C3Z FHD15T3Z FHD18C3Z FHD18T3Z

Item No	Part No.	Mark	Description		Req'd	Remarks : Serial No.
A1	20A74-10302		UNIT-ASSY,ORBITROL	オービットロールユニットアッセン	1	INC.1-42
-	20A74-10312		UNIT-ASSY,ORBITROL	オービットロールユニットアッセン	1	[VLS] INC.1-42
901	22N54-10342	K1	KIT,SEAL	シールキット	1	INC.15-17,20,21,23,24,36, 37,41
-	22N54-10352	K1	KIT,SEAL	シールキット	1	[VLS] INC.15-17,20,21,23,24,36, 37,41
902	26094-17021	K2	KIT,BRG,NEEDLE	ニードルベアリングキット	1	INC.13,14
A2	20A74-10322		ORBITROL-ASSY	オービットロールアッセン	1	INC.1-28
-	20A74-10332		ORBITROL-ASSY	オービットロールアッセン	1	[VLS] INC.1-28
1	NO PART NO.	#	SCREW	スクリュ	7	
2	NO PART NO.	#	PIN	ピン	1	
3	NO PART NO.	#	CAP,END	キャップ	1	
4	NO PART NO.	#	GEROTOR	ジロータ	1	
5	NO PART NO.	#	SPACER	スペーサ	1	
6	NO PART NO.	#	PLATE	プレート	1	
7	NO PART NO.	#	DRIVE	ドライブ	1	
8	NO PART NO.	#	PARTS,CONTROL	パーツ	1	
9	NO PART NO.	#	PIN	ピン	1	
10	NO PART NO.	#	SPRING	スプリング	4	
11	NO PART NO.	#	ROTOR	ロータ	1	
12	NO PART NO.	#	SCREW	スクリュ	1	
13	NO PART NO.	#*	BEARING	ベアリング	2	
14	NO PART NO.	#*	NEEDLE	ニードル	1	
15	NO PART NO.	#*	O-RING	Oリング	1	
16	NO PART NO.	#*	SEAL,OIL	シール	1	
17	NO PART NO.	#*	SEAL,DUST	シール	1	
18	NO PART NO.	#	RING	リング	1	
19	NO PART NO.	#	BUSHING	ブッシング	1	
20	NO PART NO.	#*	O-RING	Oリング	2	
21	NO PART NO.	#*	O-RING	Oリング	1	
22	NO PART NO.	#	BALL	ボール	1	
23	NO PART NO.	#*	SEAL,FACE	シール	1	
24	NO PART NO.	#*	O-RING	Oリング	1	
25	NO PART NO.	#	PLATE,NAME	プレート	1	
26	NO PART NO.	#	RIVET	リベット	2	
27	NO PART NO.	#	SCREW	スクリュ	1	
28	NO PART NO.	#	VALVE,CHECK	バルブ	1	
29	22N54-10361		CONTROLLER,EPACS	コントローラ	1	
30	NO PART NO.	#	SCREW	スクリュ	2	
A2	22N54-10371		VALVE-ASSY	バルブアッセン	1	INC.31-42
-	22N54-10381		VALVE-ASSY	バルブアッセン	1	[VLS] INC.31-42
31	NO PART NO.	#	BLOCK,VALVE	ブロック	1	
32	NO PART NO.	#	SPOOL	スプール	1	
33	NO PART NO.	#	TUBE	チューブ	1	
34	NO PART NO.	#	NUT	ナット	1	
35	NO PART NO.	#	COIL	コイル	1	
36	NO PART NO.	#*	O-RING	Oリング	4	

FIG.68 ORBITROL

(F7Z14130) オービットロール

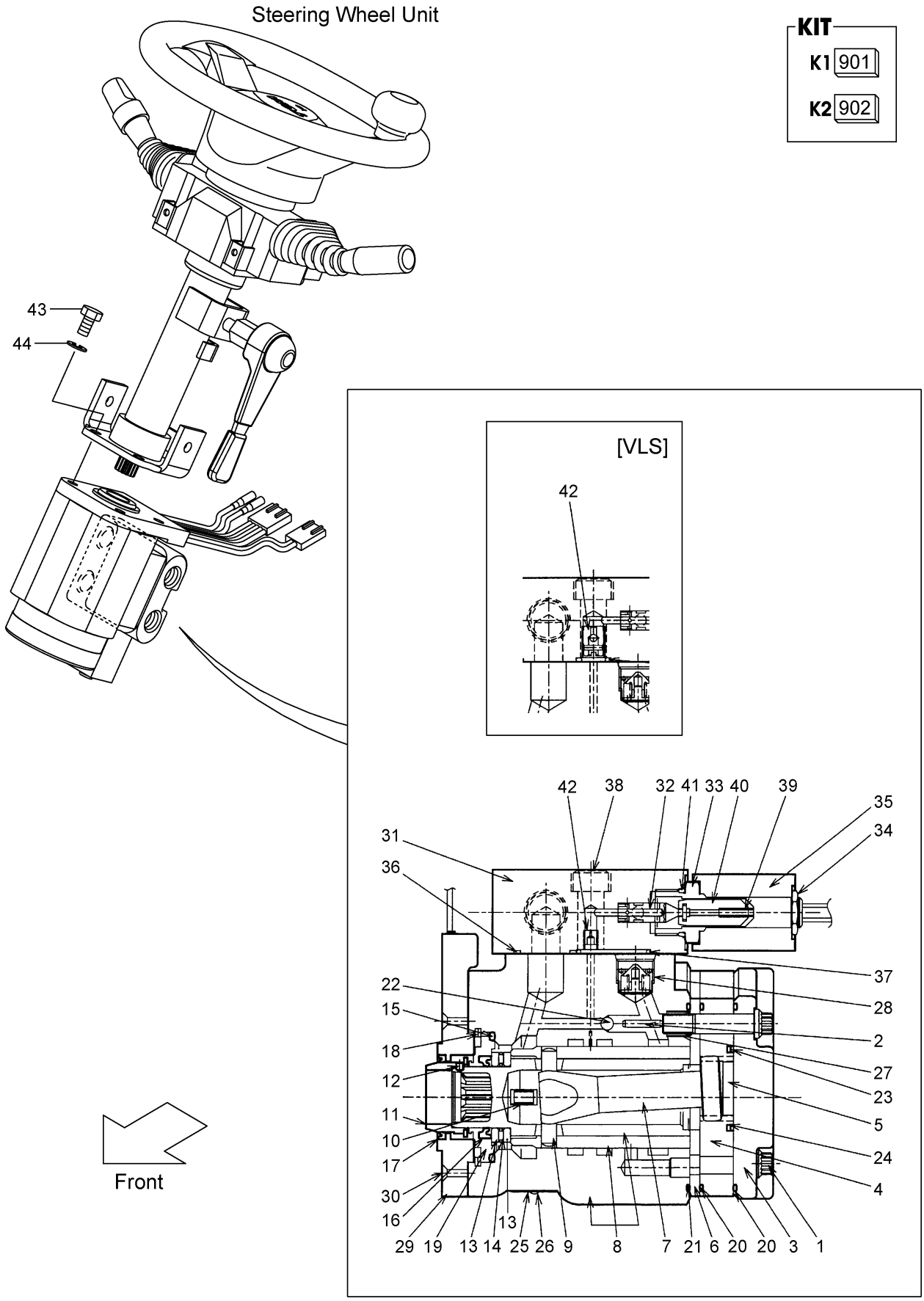

A:FHD15C3Z FHD15T3Z FHD18C3Z FHD18T3Z

Item No	Part No.	Mark	Description		Req'd	Remarks : Serial No.
37	NO PART NO.	#*	O-RING	Oﾘﾝｸﾞ	1	
38	NO PART NO.	#	BOLT	ﾎﾞﾙﾄ	2	
39	NO PART NO.	#	SPRING	ｽﾌﾟﾘﾝｸﾞ	1	
40	NO PART NO.	#	CORE	ｺｱ	1	
41	NO PART NO.	#*	O-RING	Oﾘﾝｸﾞ	1	
42	NO PART NO.	#	PLUG	ﾌﾟﾗｸﾞ	1	
-	NO PART NO.	#	VALVE,CHECK	ﾊﾞﾙﾌﾞ	1	[VLS]
43	01113-10035		BOLT	ﾎﾞﾙﾄ	4	
44	02011-00010		WASHER	ﾜｯｼｬ	4	

FIG.69 ORBITROL FITTING

(F7Z14140) オービットロールフィッティング

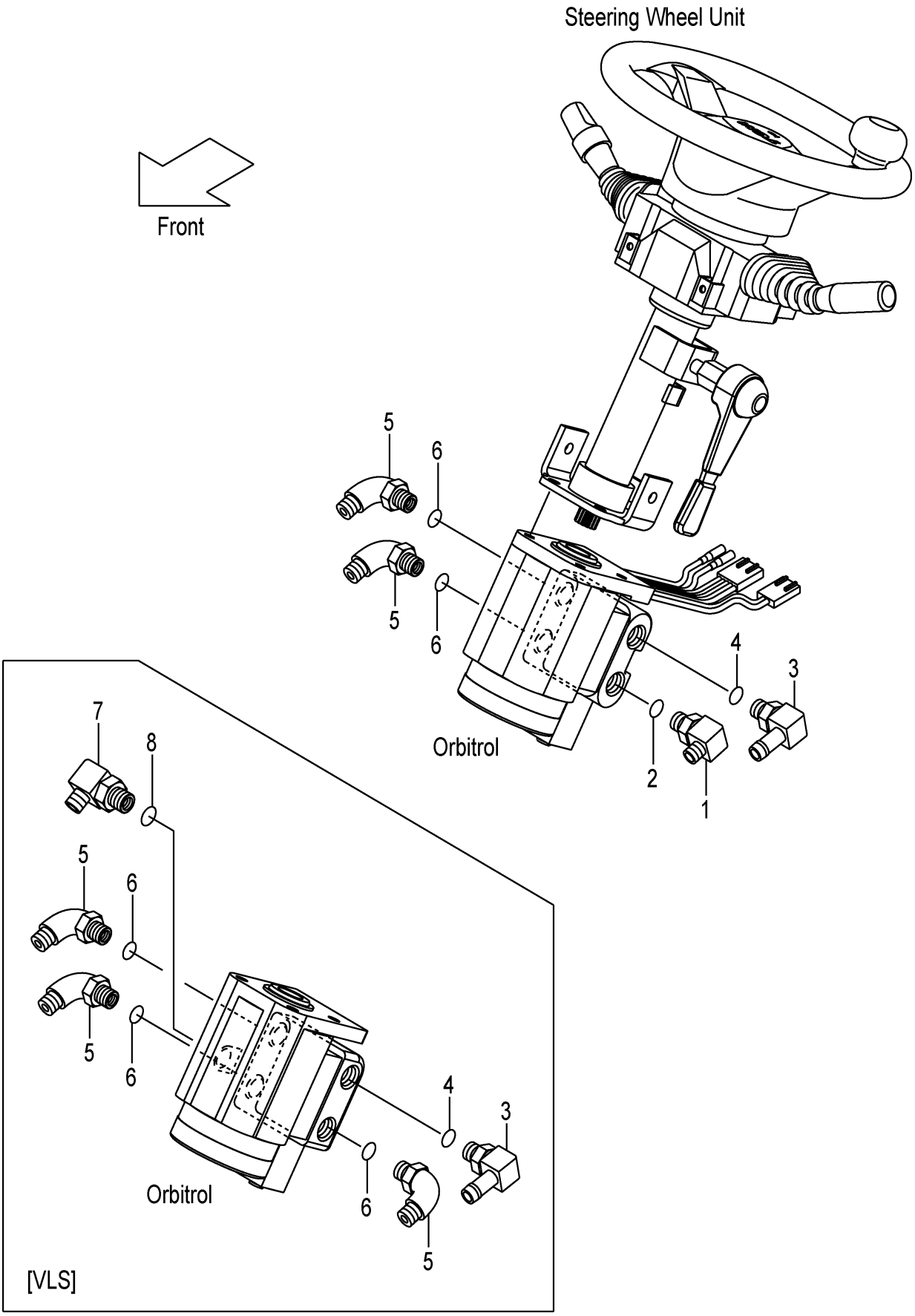

FIG.69

(F7Z14140)

A:FHD15C3Z FHD15T3Z FHD18C3Z FHD18T3Z

Item No	Part No.	Mark	Description		Req'd	Remarks : Serial No.
A1	20387-63741		ELBOW-ASSY	ｴﾙﾎﾞｱｯｾﾝ	1	(WITHOUT VLS) INC.1,2
1	NO PART NO.	#	ELBOW	ｴﾙﾎﾞ	1	(WITHOUT VLS)
2	03320-00140		O-RING	Oﾘﾝｸﾞ	1	(WITHOUT VLS)
A2	234H7-60351		FITTING-ASSY,HOSE	ﾎｰｽﾌｨｯﾃｨﾝｸﾞｱｯｾﾝ	1	INC.3,4
3	NO PART NO.	#	FITTING,HOSE	ﾌｨｯﾃｨﾝｸﾞ	1	
4	03320-00140		O-RING	Oﾘﾝｸﾞ	1	
A3	283A7-62501		ELBOW-ASSY	ｴﾙﾎﾞｱｯｾﾝ	2	INC.5,6
-	283A7-62501		ELBOW-ASSY	ｴﾙﾎﾞｱｯｾﾝ	3	[VLS] INC.5,6
5	NO PART NO.	#	ELBOW	ｴﾙﾎﾞ	2	
-	NO PART NO.	#	ELBOW	ｴﾙﾎﾞ	3	[VLS]
6	03320-00140		O-RING	Oﾘﾝｸﾞ	2	
-	03320-00140		O-RING	Oﾘﾝｸﾞ	3	[VLS]
A4	04150-20202		ELBOW-ASSY	ｴﾙﾎﾞｱｯｾﾝ	1	[VLS] INC.7,8
7	NO PART NO.	#	ELBOW	ｴﾙﾎﾞ	1	[VLS]
8	03320-00110		O-RING	Oﾘﾝｸﾞ	1	[VLS]

FIG.70 STEERING AXLE

(F7Z14310) ステアリング゛アクスル

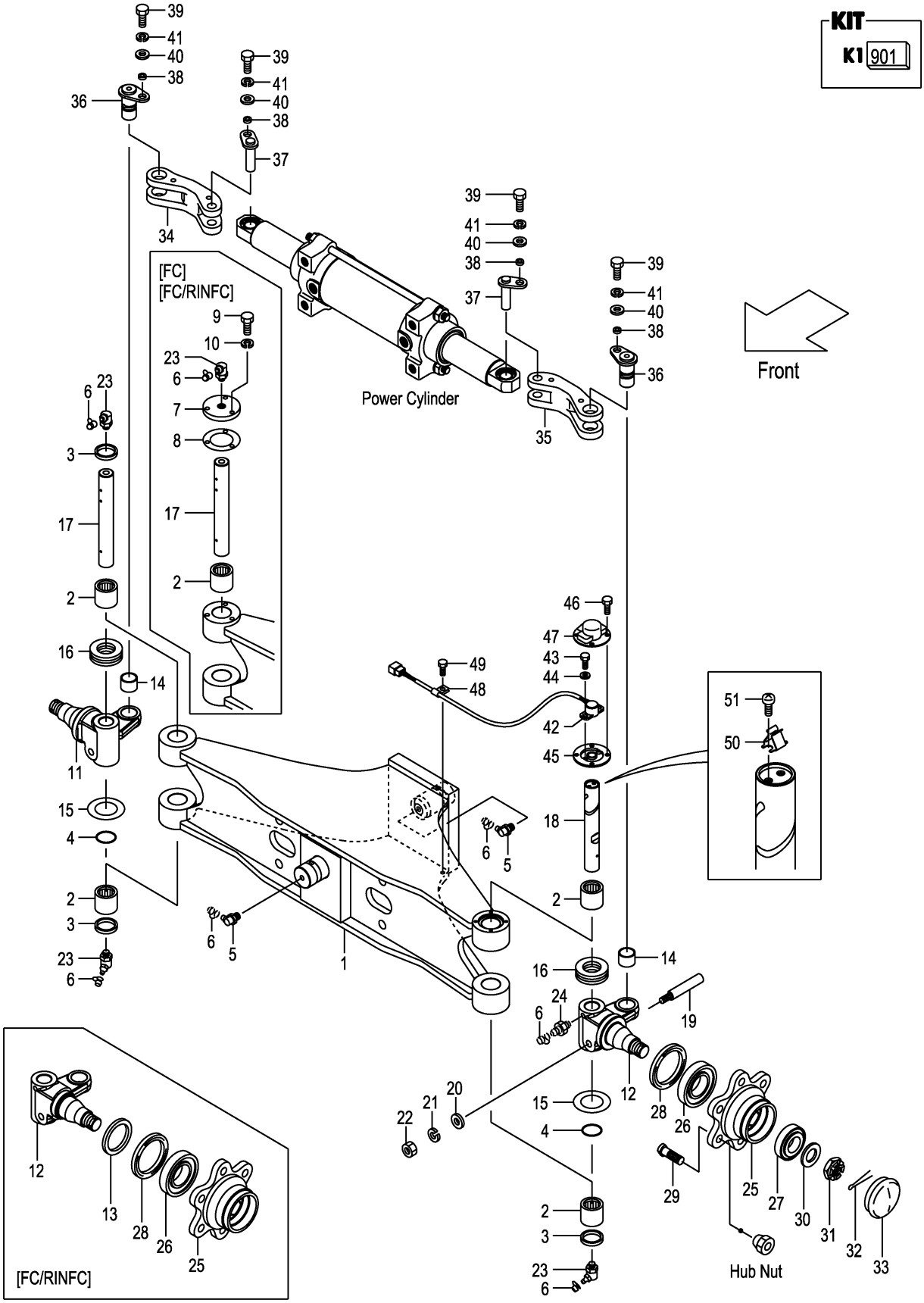

A:FHD15C3Z FHD15T3Z FHD18C3Z FHD18T3Z

Item No	Part No.	Mark	Description		Req'd	Remarks : Serial No.
A1	20A74-30103		AXLE-ASSY,STEERING	ｽﾃｱﾘﾝｸﾞｱｸｽﾙｱｯｾﾝ	1	INC.1-6,11,12,14-33
-	50A73-70103		AXLE-ASSY,STEERING	ｽﾃｱﾘﾝｸﾞｱｸｽﾙｱｯｾﾝ	1	[FC] INC.1-12,14-33
-	50A73-70203		AXLE-ASSY,STEERING	ｽﾃｱﾘﾝｸﾞｱｸｽﾙｱｯｾﾝ	1	[FC/RINFC] INC.1-33
901	24234-39803	K1	KIT,REPAIR	ﾘﾍﾟｱｷｯﾄ	1	INC.2-4,6,16,19-23
1	20A74-30122		AXLE,STEERING	ｱｸｽﾙ	1	
-	50A73-70122		AXLE,STEERING	ｱｸｽﾙ	1	[FC][FC/RINFC]
2	22574-32062	*	BEARING	ﾍﾞｱﾘﾝｸﾞ	4	
3	24234-32231	*	SEAL,OIL	ｼｰﾙ	3	
4	24234-32241	*	O-RING	Oﾘﾝｸﾞ	2	
5	04901-00191		FITTING	ﾌｨｯﾃｨﾝｸﾞ	2	
6	22199-12401	*	CAP,NIPPLE	ｷｬｯﾌﾟ	6	
7	514A3-72052		PLATE,CAP	ﾌﾟﾚｰﾄ	1	[FC][FC/RINFC]
8	514A3-72062		PACKING	ﾊﾟｯｷﾝｸﾞ	1	[FC][FC/RINFC]
9	01141-06012		BOLT	ﾎﾞﾙﾄ	3	[FC][FC/RINFC]
10	02010-10006		WASHER	ﾜｯｼｬ	3	[FC][FC/RINFC]
11	20A74-32501		KNUCKLE,RH	ﾅｯｸﾙ	1	
-	50A73-72201		KNUCKLE,RH	ﾅｯｸﾙ	1	[FC/RINFC]
12	20A74-32511		KNUCKLE,LH	ﾅｯｸﾙ	1	
-	50A73-72211		KNUCKLE,LH	ﾅｯｸﾙ	1	[FC/RINFC]
13	57393-72041		SEAT,OIL-SEAL	ｼｰﾄ	2	[FC/RINFC]
14	22N54-32481		BUSHING	ﾌﾞｯｼﾝｸﾞ	2	
15	20114-30091		SHIM,T-0.2	ｼﾑ	6	
16	22194-32222	*	BEARING	ﾍﾞｱﾘﾝｸﾞ	2	
17	281E4-32101		KINGPIN	ｷﾝｸﾞﾋﾟﾝ	1	
-	57023-72011		KINGPIN	ｷﾝｸﾞﾋﾟﾝ	1	[FC][FC/RINFC]
18	20A74-32261		KINGPIN	ｷﾝｸﾞﾋﾟﾝ	1	
19	20114-30081	*	PIN,LOCK	ﾋﾟﾝ	2	
20	02000-00008	*	WASHER	ﾜｯｼｬ	2	
21	02010-00008	*	WASHER	ﾜｯｼｬ	2	
22	01400-00008	*	NUT	ﾅｯﾄ	2	
23	04901-00160	*	FITTING	ﾌｨｯﾃｨﾝｸﾞ	3	
24	04901-00100		FITTING	ﾌｨｯﾃｨﾝｸﾞ	1	
25	24234-32221		HUB	ﾊﾌﾞ	2	
26	12003-43021		BEARING	ﾍﾞｱﾘﾝｸﾞ	2	
27	03071-30206		BEARING	ﾍﾞｱﾘﾝｸﾞ	2	
28	22574-32102		SEAL,OIL	ｼｰﾙ	2	
29	23654-32041		BOLT,HUB	ﾎﾞﾙﾄ	12	
30	02000-00024		WASHER	ﾜｯｼｬ	2	
31	01412-00024		NUT,CASTLE	ﾅｯﾄ	2	
32	02200-05045		PIN,COTTER	ﾋﾟﾝ	2	
33	22194-32361		CAP	ｷｬｯﾌﾟ	2	
34	20A74-32561		YOKE,RH	ﾖｰｸ	1	
35	20A74-32551		YOKE,LH	ﾖｰｸ	1	
36	22N54-32131		PIN	ﾋﾟﾝ	2	1-202
-	22N54-32451		PIN	ﾋﾟﾝ	2	203-
37	20A74-32151		PIN	ﾋﾟﾝ	2	
38	22N54-32181		COLLAR	ｶﾗｰ	4	
39	01103-08016		BOLT	ﾎﾞﾙﾄ	4	
40	02000-00008		WASHER	ﾜｯｼｬ	4	
41	02011-00008		WASHER	ﾜｯｼｬ	4	

FIG.70 STEERING AXLE

(F7Z14310) ステアリング゛アクスル

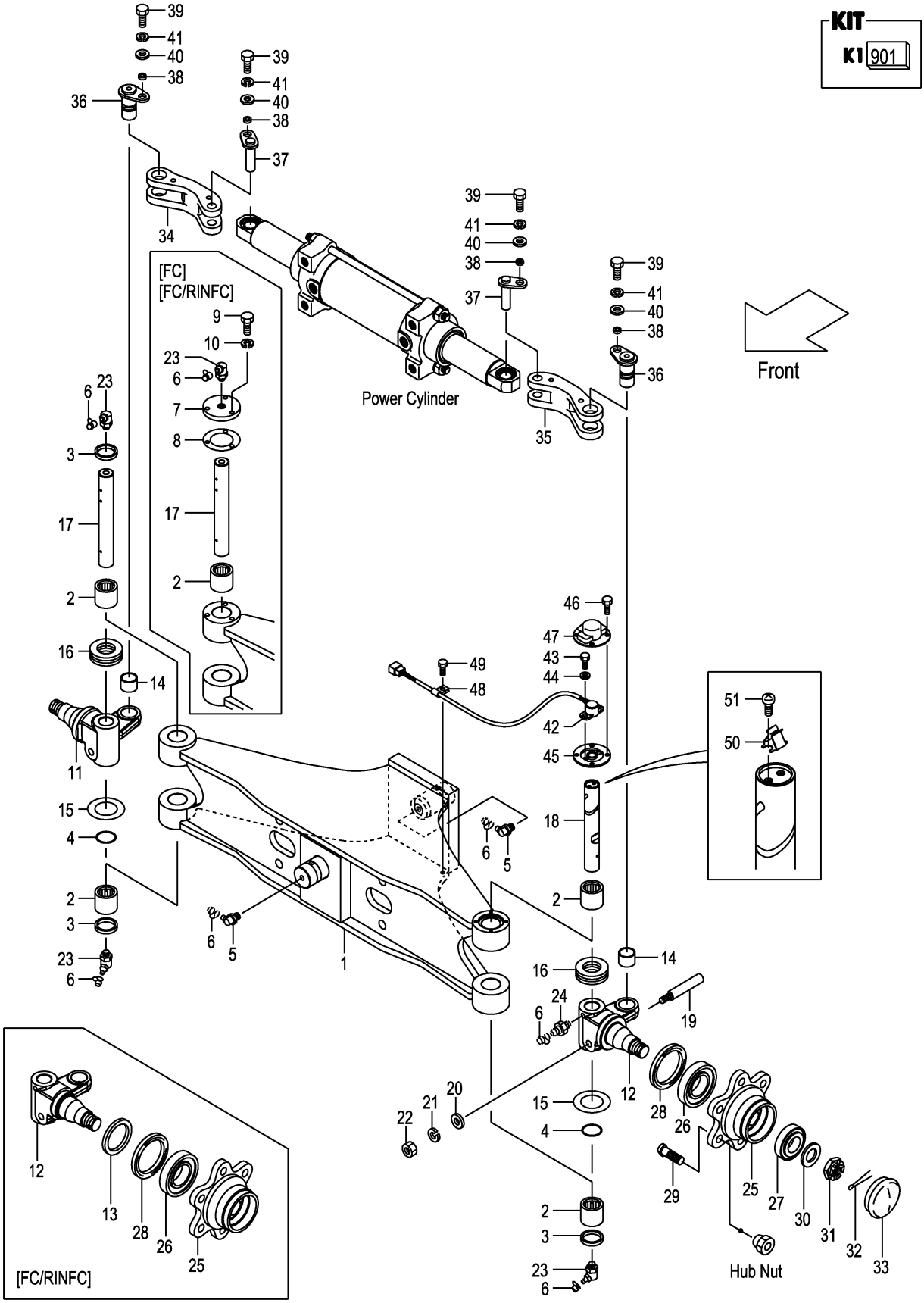

FIG.70

(F7Z14310)

A:FHD15C3Z FHD15T3Z FHD18C3Z FHD18T3Z

Item No	Part No.	Mark	Description		Req'd	Remarks : Serial No.
42	22N54-32211		POTENTIOMETER	ﾎﾟﾃﾝｼｮﾝﾒｰﾀ	1	
43	01030-04008		BOLT	ﾎﾞﾙﾄ	2	
44	02000-00004		WASHER	ﾜｯｼｬ	2	
45	22N54-32222		ADAPTER	ｱﾀﾞﾌﾟﾀ	1	
46	01030-06010		BOLT	ﾎﾞﾙﾄ	4	
47	22N54-32241		COVER,POTENTIOMETER	ｶﾊﾞｰ	1	
48	26602-42041		CLIP	ｸﾘｯﾌﾟ	1	
49	01185-08016		BOLT	ﾎﾞﾙﾄ	1	
50	22N54-33051		SPRING	ｽﾌﾟﾘﾝｸﾞ	1	
51	01030-05008		SCREW	ｽｸﾘｭ	2	

FIG.71 AXLE SUPPORT

(F7Z14340) アクスルサポート

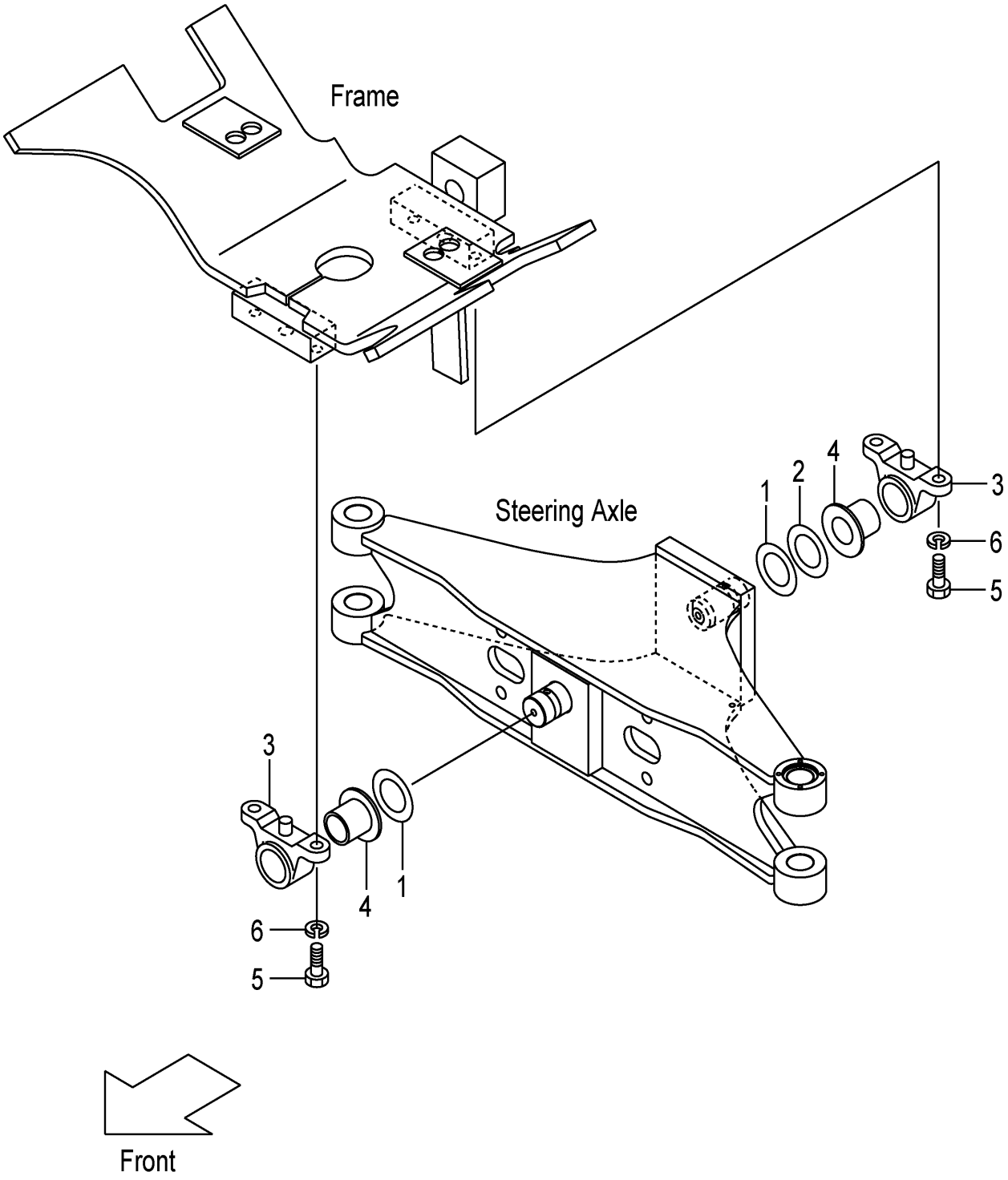

FIG.71

(F7Z14340)

A:FHD15C3Z FHD15T3Z FHD18C3Z FHD18T3Z

Item No	Part No.	Mark	Description		Req'd	Remarks : Serial No.
1	23458-52031		SHIM,T-1.0	ｼﾑ	2	
2	24234-32501		SHIM,T-0.5	ｼﾑ	1	
3	24236-12572		SUPPORT,REAR-AXLE	ｻﾎﾟｰﾄ	2	
4	24236-12581		BUSHING	ﾌﾞｯｼﾝｸﾞ	2	
5	01100-14040		BOLT	ﾎﾞﾙﾄ	4	
6	02010-00014		WASHER	ﾜｯｼｬ	4	

FIG.72 HUB NUT

(F7Z14410) ﾊﾌﾞﾅｯﾄ

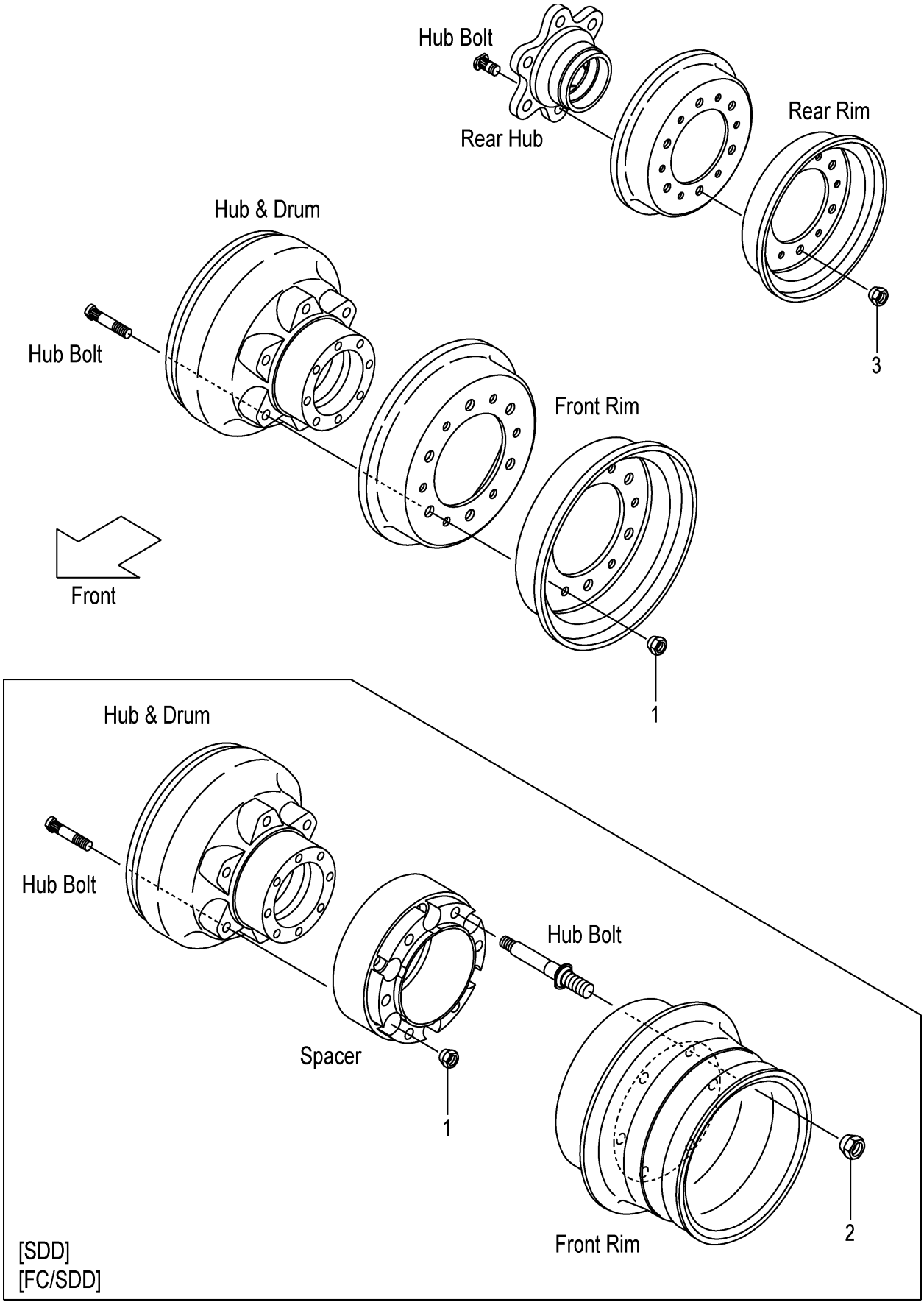

FIG.72

(F7Z14410)

A:FHD15C3Z FHD15T3Z FHD18C3Z FHD18T3Z

Item No	Part No.	Mark	Description	Req'd	Remarks : Serial No.
1	23654-34051		NUT,HUB ﾅｯﾄ	12	(FRONT)
-	57045-52151		NUT,HUB ﾅｯﾄ	12	[FC][FC/SDD](FRONT)
2	54237-43021		NUT,HUB ﾅｯﾄ	12	[SDD](FRONT-OUTSIDE)
-	57023-72081		NUT,HUB ﾅｯﾄ	12	[FC/SDD](FRONT-OUTSIDE)
3	23654-34051		NUT,HUB ﾅｯﾄ	12	(REAR)
-	57045-52151		NUT,HUB ﾅｯﾄ	12	[FC](REAR)

FIG.73 FENDER [DD][SDD]

(F7Z14420) ﾌｪﾝﾀﾞ

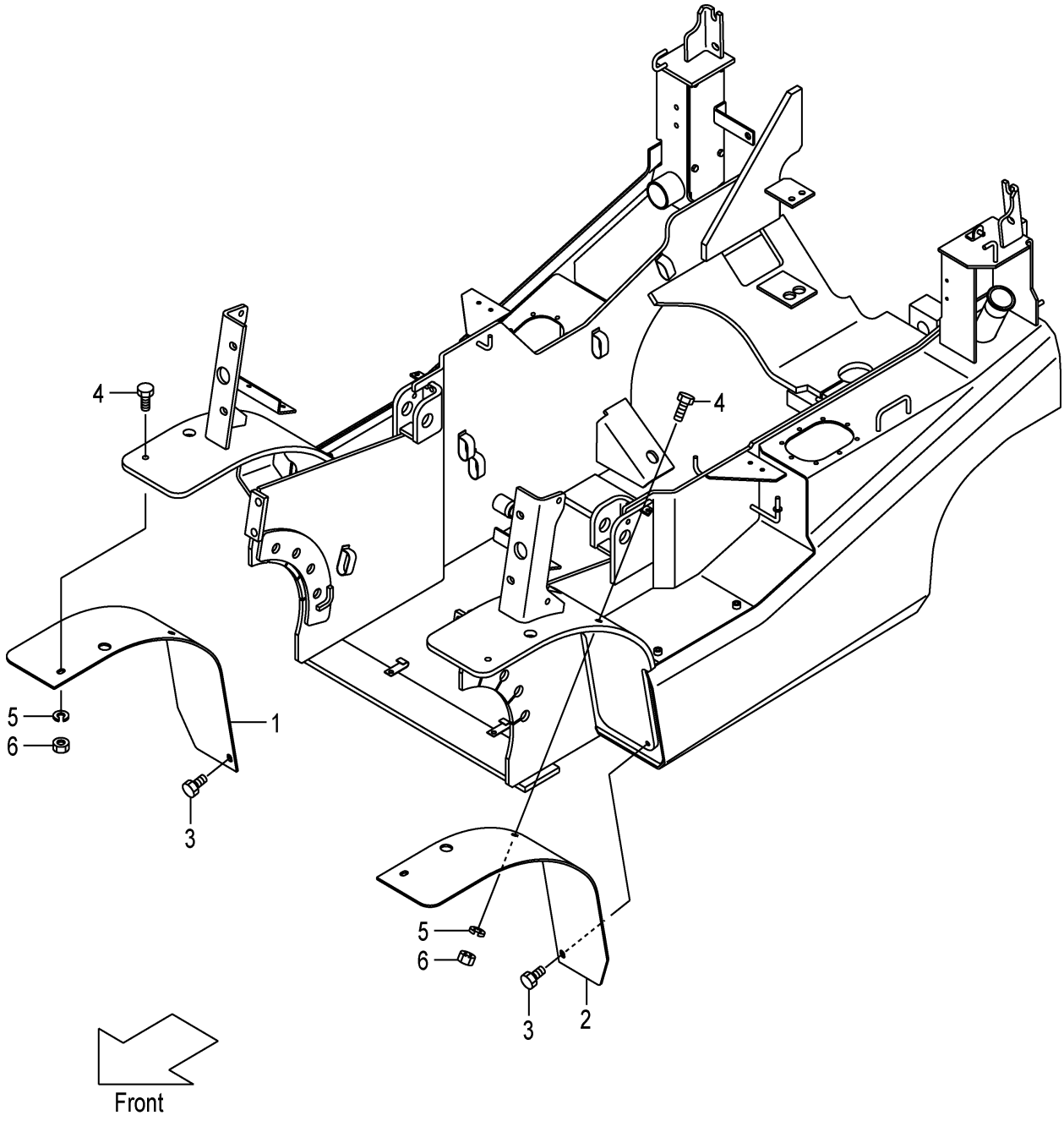

FIG.73

(F7Z14420)

A:FHD15C3Z FHD15T3Z FHD18C3Z FHD18T3Z

Item No	Part No.	Mark	Description		Req'd	Remarks : Serial No.
1	50A77-42001		FENDER,FRONT,RH	ﾌｪﾝﾀﾞ	1	[DD]
-	50A77-42021		FENDER,FRONT,RH	ﾌｪﾝﾀﾞ	1	[SDD]
2	50A77-42011		FENDER,FRONT,LH	ﾌｪﾝﾀﾞ	1	[DD]
-	50A77-42031		FENDER,FRONT,LH	ﾌｪﾝﾀﾞ	1	[SDD]
3	216G6-43231		BOLT	ﾎﾞﾙﾄ	2	[DD][SDD]
4	534A7-42231		BOLT	ﾎﾞﾙﾄ	4	[DD][SDD]
5	02010-20010		WASHER	ﾜｯｼｬ	4	[DD][SDD]
6	234A8-42561		NUT	ﾅｯﾄ	4	[DD][SDD]

FIG.74 FRONT WHEEL (1.5T)

(F7Z14430) フロントホイール

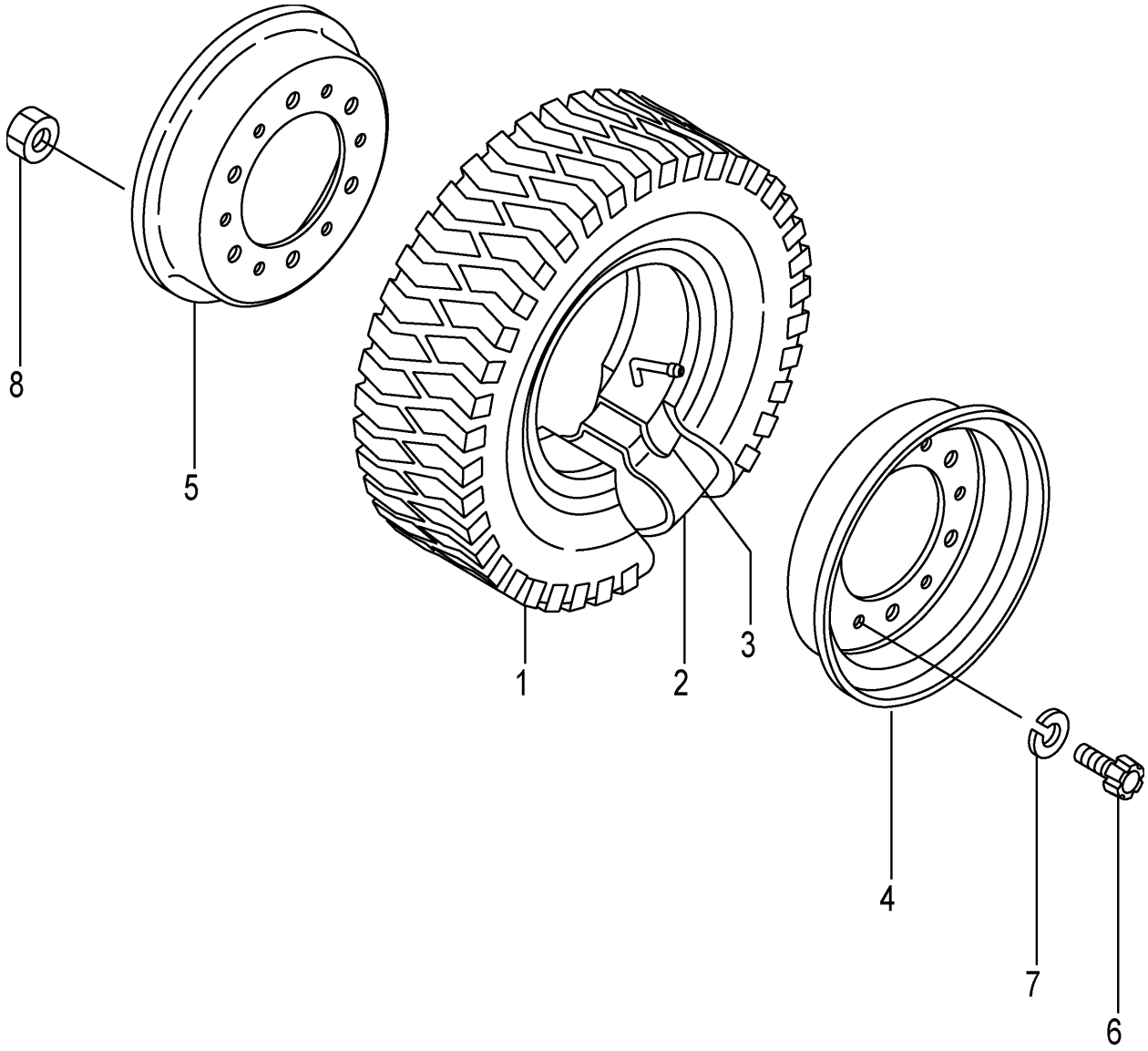

A:FHD15C3Z FHD15T3Z

Item No	Part No.	Mark	Description		Req'd	Remarks : Serial No.
A1	52576-80902		WHEEL-ASSY,FRONT	ﾌﾛﾝﾄﾎｲｰﾙｱｯｾﾝ	2	INC.1-8
1	06006-65010		TIRE,650-10-10	ﾀｲﾔ	2	
2	06711-65010		TUBE,650-10-10T	ﾁｭｰﾌﾞ	2	
3	06701-65010		FLAP,650-10-10F	ﾌﾗｯﾌﾟ	2	
A2	22574-40303		RIM-ASSY,500F-10	ﾘﾑｱｯｾﾝ	2	INC.4-8
4	NO PART NO.	#	RIM,OUTSIDE	ﾘﾑ	2	
5	NO PART NO.	#	RIM,INSIDE	ﾘﾑ	2	
6	510F3-82611		BOLT	ﾎﾞﾙﾄ	12	
7	02011-00012		WASHER	ﾜｯｼｬ	12	
8	01402-10012		NUT	ﾅｯﾄ	12	

FIG.75 FRONT WHEEL (1.8T)

(F7Z14440) フロントホイール

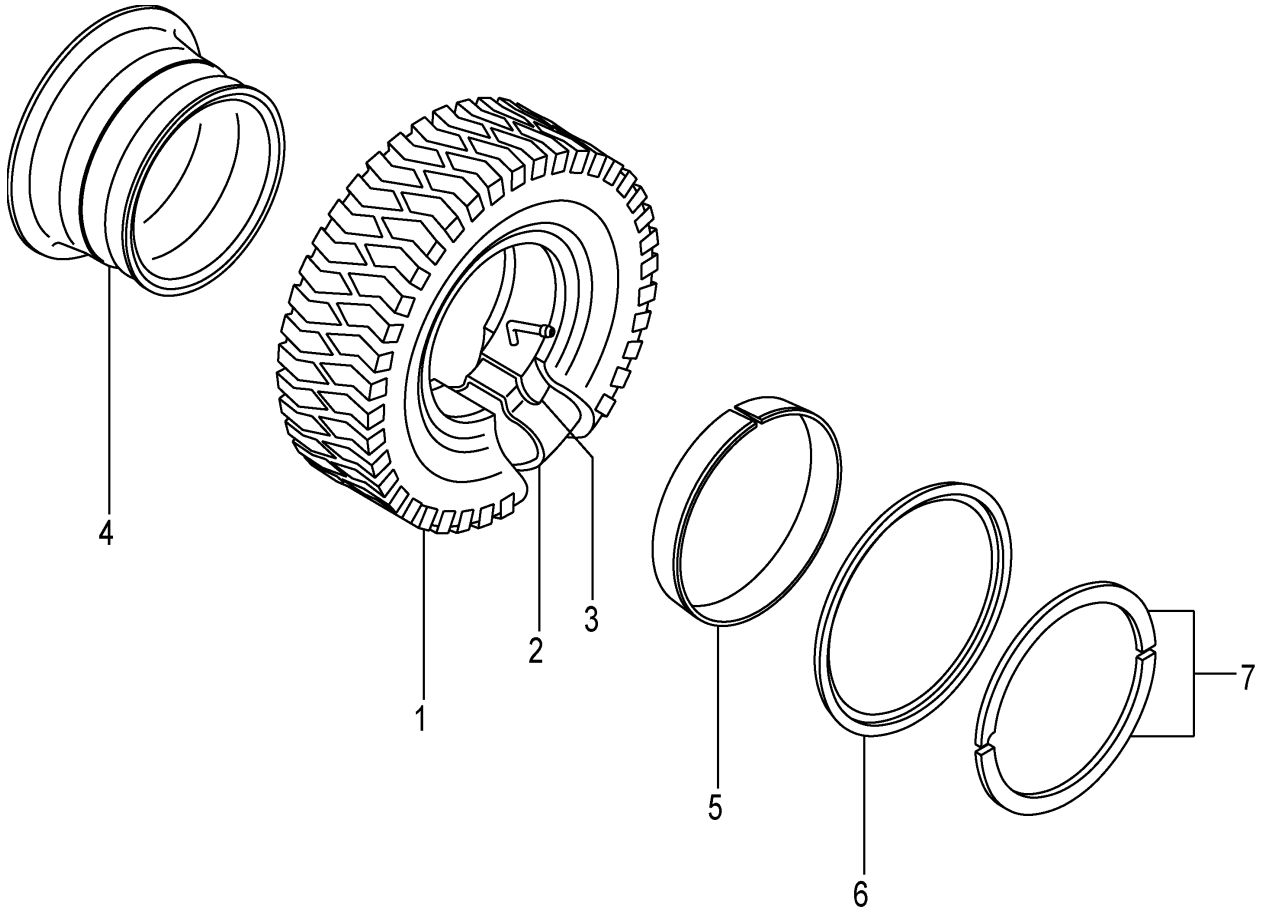

A:FHD18C3Z FHD18T3Z

Item No	Part No.	Mark	Description		Req'd	Remarks : Serial No.
A1	54276-80401		WHEEL-ASSY,FRONT	ﾌﾛﾝﾄﾎｲｰﾙｱｯｾﾝ	2	INC.1-7
1	06006-65010		TIRE,650-10-10	ﾀｲﾔ	2	
2	06711-65010		TUBE,650-10-10T	ﾁｭｰﾌﾞ	2	
3	06701-65010		FLAP,650-10-10F	ﾌﾗｯﾌﾟ	2	
A2	24274-40501		RIM-ASSY,500F-10	ﾘﾑｱｯｾﾝ	2	INC.4-7
4	NO PART NO.	#	RIM	ﾘﾑ	2	
5	54236-83011		BAND	ﾊﾞﾝﾄﾞ	2	
6	54236-83021		FLANGE,SIDE	ﾌﾗﾝｼﾞ	2	
7	54236-83031		RING,LOCK	ﾘﾝｸﾞ	2	

FIG.76 FRONT WHEEL (1.5T):[DR F]

(F7Z14450) フロントホイール

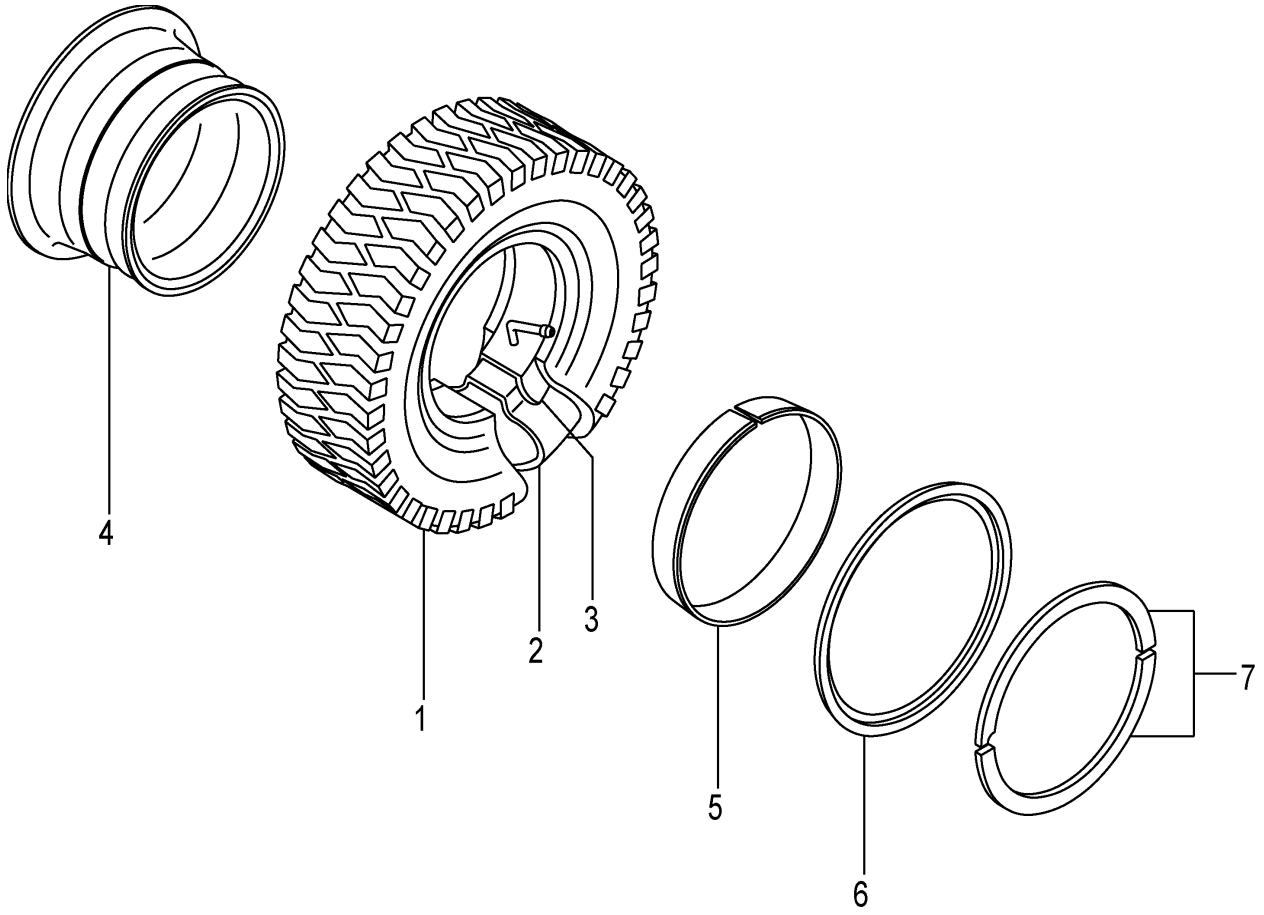

A:FHD15C3Z FHD15T3Z

Item No	Part No.	Mark	Description		Req'd	Remarks : Serial No.
A1	54236-80141		WHEEL-ASSY,FRONT	ﾌﾛﾝﾄﾎｲｰﾙｱｯｾﾝ	2	[DR F] INC.1-7
1	06006-65010		TIRE,650-10-10	ﾀｲﾔ	2	[DR F]
2	06711-65010		TUBE,650-10-10T	ﾁｭｰﾌﾞ	2	[DR F]
3	06701-65010		FLAP,650-10-10F	ﾌﾗｯﾌﾟ	2	[DR F]
A2	54236-80181		RIM-ASSY,500F-10	ﾘﾑｱｯｾﾝ	2	[DR F] INC.4-7
4	NO PART NO.	#	RIM	ﾘﾑ	2	[DR F]
5	54236-83011		BAND	ﾊﾞﾝﾄﾞ	2	[DR F]
6	54236-83021		FLANGE,SIDE	ﾌﾗﾝｼﾞ	2	[DR F]
7	54236-83031		RING,LOCK	ﾘﾝｸﾞ	2	[DR F]

FIG.77 FRONT WHEEL (1.5T):[TJ F][TJSF][TF][TS F]

(F7Z14460) フロントホイール

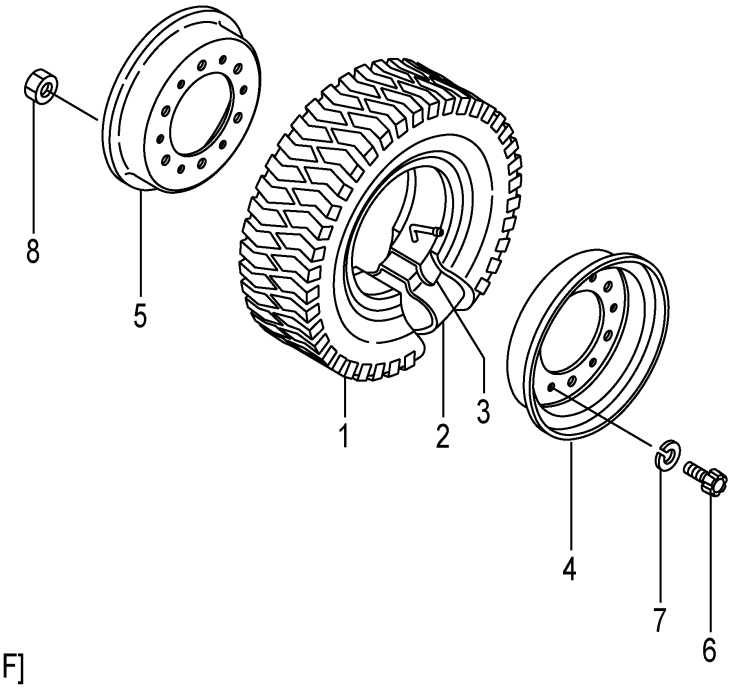

[TJ F][TJSF][TS F]

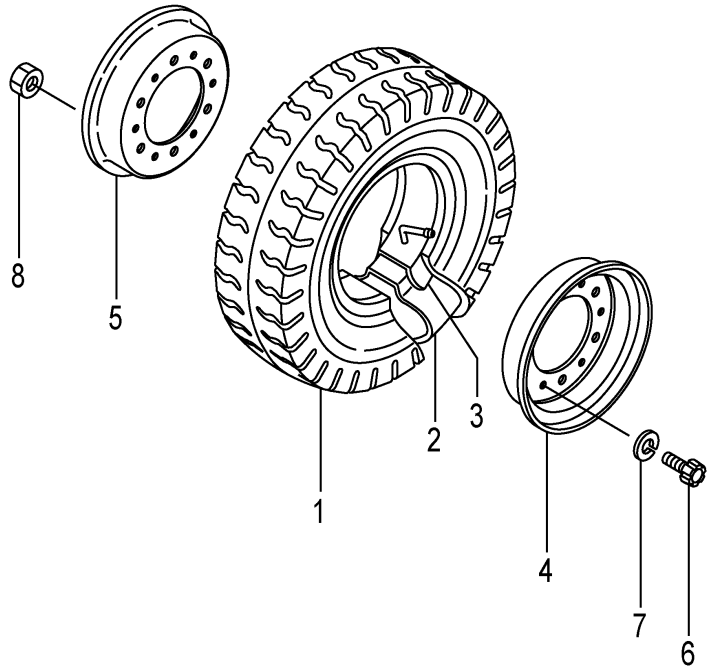

[T F]

A:FHD15C3Z FHD15T3Z

Item No	Part No.	Mark	Description		Req'd	Remarks : Serial No.
A1	52576-80902		WHEEL-ASSY,FRONT	ﾌﾛﾝﾄﾎｲｰﾙｱｯｾﾝ	2	[TJ F] INC.1-8
-	52576-80702		WHEEL-ASSY,FRONT	ﾌﾛﾝﾄﾎｲｰﾙｱｯｾﾝ	2	[TJSF] INC.1-8
-	22574-40202		WHEEL-ASSY,FRONT	ﾌﾛﾝﾄﾎｲｰﾙｱｯｾﾝ	2	[T F] INC.1-8
-	52576-80502		WHEEL-ASSY,FRONT	ﾌﾛﾝﾄﾎｲｰﾙｱｯｾﾝ	2	[TS F] INC.1-8
1	06006-65010		TIRE,650-10-10	ﾀｲﾔ	2	[TJ F]
-	06005-65010		TIRE,650-10-10	ﾀｲﾔ	2	[TJSF]
-	06001-65010		TIRE,650-10-10	ﾀｲﾔ	2	[T F]
-	06007-65010		TIRE,650-10-10	ﾀｲﾔ	2	[TS F]
2	06711-65010		TUBE,650-10-10T	ﾁｭｰﾌﾞ	2	[TJ F][TJSF][T F][TS F]
3	06701-65010		FLAP,650-10-10F	ﾌﾗｯﾌﾟ	2	[TJ F][TJSF][T F][TS F]
A2	22574-40303		RIM-ASSY,500F-10	ﾘﾑｱｯｾﾝ	2	[TJ F][TJSF][T F][TS F] INC.4-8
4	NO PART NO.	#	RIM,OUTSIDE	ﾘﾑ	2	[TJ F][TJSF][T F][TS F]
5	NO PART NO.	#	RIM,INSIDE	ﾘﾑ	2	[TJ F][TJSF][T F][TS F]
6	510F3-82611		BOLT	ﾎﾞﾙﾄ	12	[TJ F][TJSF][T F][TS F]
7	02011-00012		WASHER	ﾜｯｼｬ	12	[TJ F][TJSF][T F][TS F]
8	01402-10012		NUT	ﾅｯﾄ	12	[TJ F][TJSF][T F][TS F]

FIG.78 FRONT WHEEL (1.8T):[TJ F][TJSF][TF][TS F]

(F7Z14470) フロントホイール

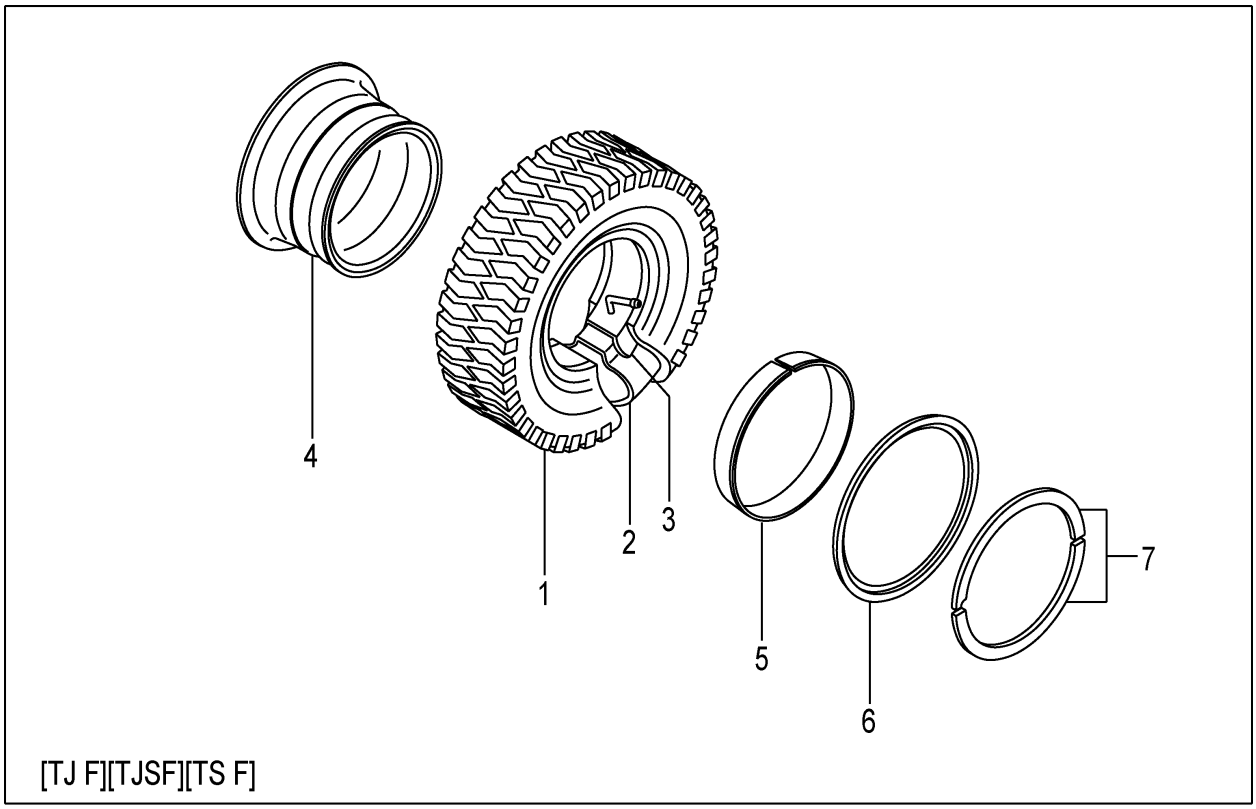

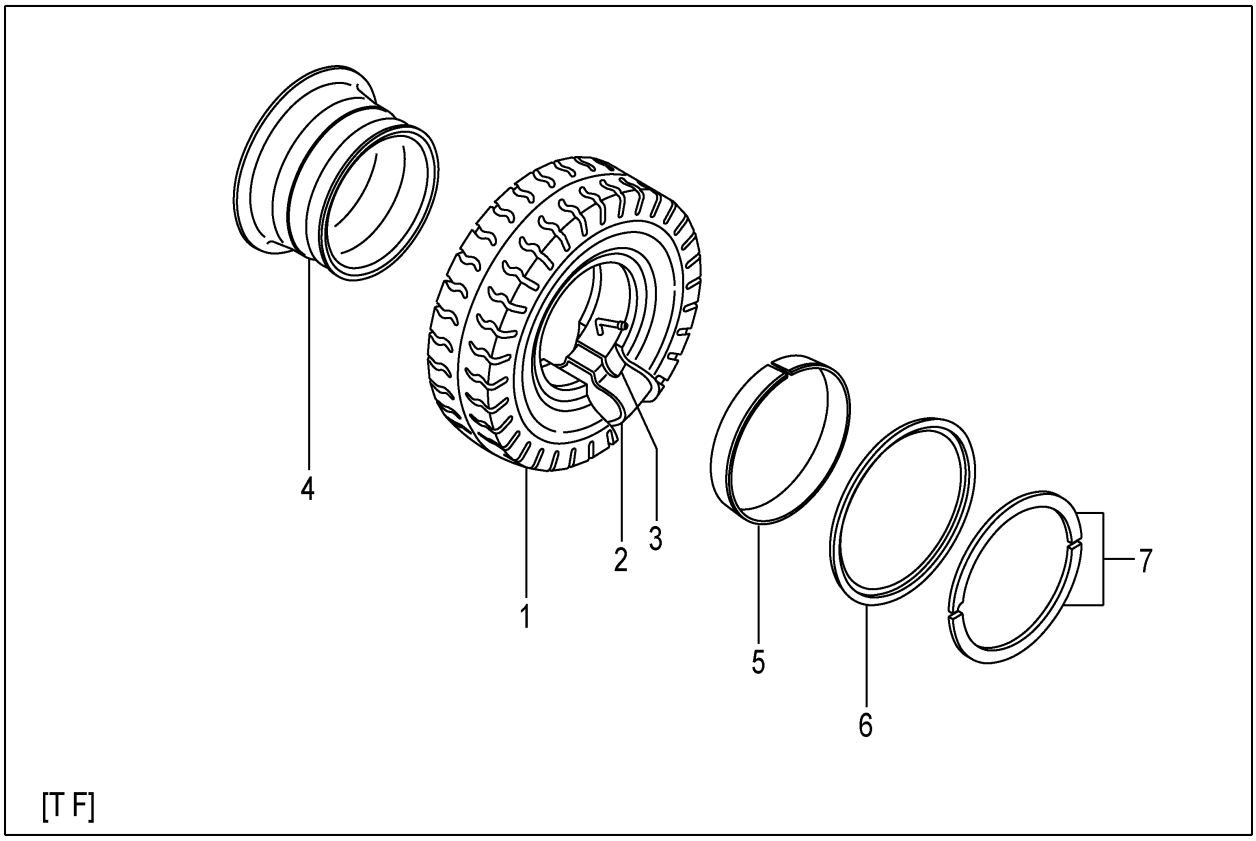

A:FHD18C3Z FHD18T3Z

Item No	Part No.	Mark	Description		Req'd	Remarks : Serial No.
A1	54276-80401		WHEEL-ASSY,FRONT	ﾌﾛﾝﾄﾎｲｰﾙｱｯｾﾝ	2	[TJ F] INC.1-7
-	54276-80301		WHEEL-ASSY,FRONT	ﾌﾛﾝﾄﾎｲｰﾙｱｯｾﾝ	2	[TJSF] INC.1-7
-	24274-40201		WHEEL-ASSY,FRONT	ﾌﾛﾝﾄﾎｲｰﾙｱｯｾﾝ	2	[T F] INC.1-7
-	54276-80501		WHEEL-ASSY,FRONT	ﾌﾛﾝﾄﾎｲｰﾙｱｯｾﾝ	2	[TS F] INC.1-7
1	06006-65010		TIRE,650-10-10	ﾀｲﾔ	2	[TJ F]
-	06005-65010		TIRE,650-10-10	ﾀｲﾔ	2	[TJSF]
-	06001-65010		TIRE,650-10-10	ﾀｲﾔ	2	[T F]
-	06007-65010		TIRE,650-10-10	ﾀｲﾔ	2	[TS F]
2	06711-65010		TUBE,650-10-10T	ﾁｭｰﾌﾞ	2	[TJ F][TJSF][T F][TS F]
3	06701-65010		FLAP,650-10-10F	ﾌﾗｯﾌﾟ	2	[TJ F][TJSF][T F][TS F]
A2	24274-40501		RIM-ASSY,500F-10	ﾘﾑｱｯｾﾝ	2	[TJ F][TJSF][T F][TS F] INC.4-7
4	NO PART NO.	#	RIM	ﾘﾑ	2	[TJ F][TJSF][T F][TS F]
5	54236-83011		BAND	ﾊﾞﾝﾄﾞ	2	[TJ F][TJSF][T F][TS F]
6	54236-83021		FLANGE,SIDE	ﾌﾗﾝｼﾞ	2	[TJ F][TJSF][T F][TS F]
7	54236-83031		RING,LOCK	ﾘﾝｸﾞ	2	[TJ F][TJSF][T F][TS F]

FIG.79 FRONT WHEEL (1.5T):[(TJ F,TJSF,TF,TS F)/DR F]

(F7Z14480) フロントホイール

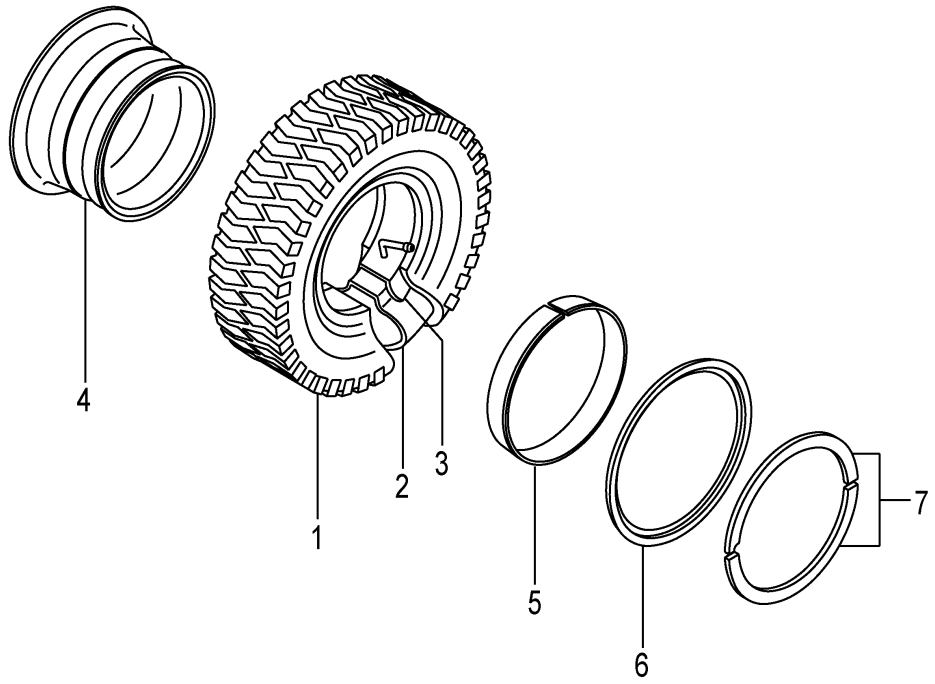

[TJ F/DR F][TJSF/DR F][TS F/DR F]

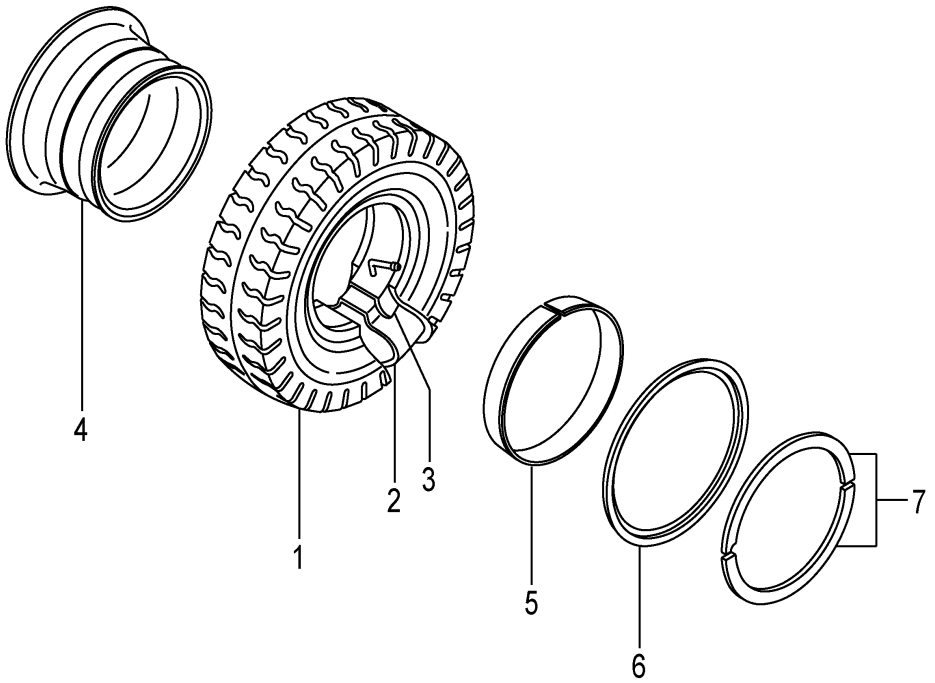

[T F/DR F]

A:FHD15C3Z FHD15T3Z

Item No	Part No.	Mark	Description		Req'd	Remarks : Serial No.
A1	54236-80141		WHEEL-ASSY,FRONT	ﾌﾛﾝﾄﾎｲｰﾙｱｯｾﾝ	2	[TJ F/DR F] INC.1-7
-	54236-80131		WHEEL-ASSY,FRONT	ﾌﾛﾝﾄﾎｲｰﾙｱｯｾﾝ	2	[TJSF/DR F] INC.1-7
-	54236-80101		WHEEL-ASSY,FRONT	ﾌﾛﾝﾄﾎｲｰﾙｱｯｾﾝ	2	[T F/DR F] INC.1-7
-	54236-80151		WHEEL-ASSY,FRONT	ﾌﾛﾝﾄﾎｲｰﾙｱｯｾﾝ	2	[TS F/DR F] INC.1-7
1	06006-65010		TIRE,650-10-10	ﾀｲﾔ	2	[TJ F/DR F]
-	06005-65010		TIRE,650-10-10	ﾀｲﾔ	2	[TJSF/DR F]
-	06001-65010		TIRE,650-10-10	ﾀｲﾔ	2	[T F/DR F]
-	06007-65010		TIRE,650-10-10	ﾀｲﾔ	2	[TS F/DR F]
2	06711-65010		TUBE,650-10-10T	ﾁｭｰﾌﾞ	2	[TJ F/DR F][TJSF/DR F]
						[T F/DR F][TS F/DR F]
3	06701-65010		FLAP,650-10-10F	ﾌﾗｯﾌﾟ	2	[TJ F/DR F][TJSF/DR F]
						[T F/DR F][TS F/DR F]
A2	54236-80181		RIM-ASSY,500F-10	ﾘﾑｱｯｾﾝ	2	[TJ F/DR F][T F/DR F] INC.4-7
-	54236-80181		RIM-ASSY,500F-10	ﾘﾑｱｯｾﾝ	2	[TJSF/DR F][TS F/DR F] INC.4-7
4	NO PART NO.	#	RIM	ﾘﾑ	2	[TJ F/DR F][TJSF/DR F]
						[T F/DR F][TS F/DR F]
5	54236-83011		BAND	ﾊﾞﾝﾄﾞ	2	[TJ F/DR F][TJSF/DR F]
						[T F/DR F][TS F/DR F]
6	54236-83021		FLANGE,SIDE	ﾌﾗﾝｼﾞ	2	[TJ F/DR F][TJSF/DR F]
						[T F/DR F][TS F/DR F]
7	54236-83031		RING,LOCK	ﾘﾝｸﾞ	2	[TJ F/DR F][TJSF/DR F]
						[T F/DR F][TS F/DR F]

FRONT WHEEL (1.5T)

FIG.80 :[TSUF][TUJF][TUSF][TUWF][TUGF]

(F7Z14490) フロントホイール

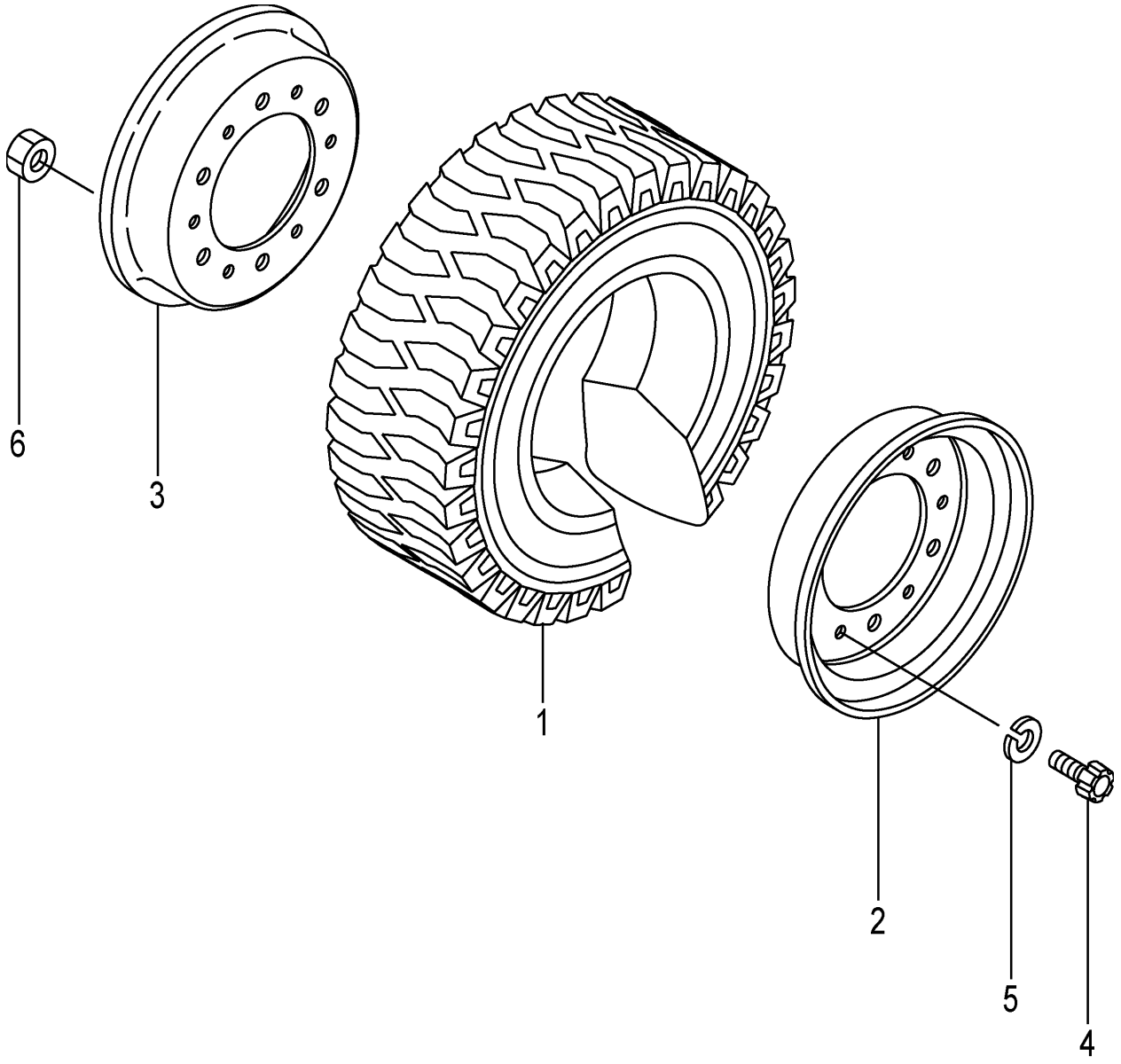

A:FHD15C3Z FHD15T3Z

Item No	Part No.	Mark	Description		Req'd	Remarks : Serial No.
A1	518G6-80201		WHEEL-ASSY,FRONT	ﾌﾛﾝﾄﾎｲｰﾙｱｯｾﾝ	2	[TSUF] INC.1-6
-	51233-80401		WHEEL-ASSY,FRONT	ﾌﾛﾝﾄﾎｲｰﾙｱｯｾﾝ	2	[TUJF] INC.1-6
-	51236-80221		WHEEL-ASSY,FRONT	ﾌﾛﾝﾄﾎｲｰﾙｱｯｾﾝ	2	[TUSF] INC.1-6
-	51236-80201		WHEEL-ASSY,FRONT	ﾌﾛﾝﾄﾎｲｰﾙｱｯｾﾝ	2	[TUWF] INC.1-6
-	51236-80211		WHEEL-ASSY,FRONT	ﾌﾛﾝﾄﾎｲｰﾙｱｯｾﾝ	2	[TUGF] INC.1-6
1	06807-65010		TIRE,SNOW,650-10	ﾀｲﾔ	2	[TSUF]
-	06802-65010		TIRE,UNIQUE,650-10	ﾀｲﾔ	2	[TUJF/DUN]
-	06806-65010		TIRE,UNIQUE,650-10	ﾀｲﾔ	2	[TUJF/AIC]
-	06853-65010		TIRE,SOFTONE,650-10	ﾀｲﾔ	2	[TUSF]
-	06841-65010		TIRE,WHITE,650-10	ﾀｲﾔ	2	[TUWF]
-	06843-65010		TIRE,GREEN,650-10	ﾀｲﾔ	2	[TUGF]
A2	22574-40303		RIM-ASSY,500F-10	ﾘﾑｱｯｾﾝ	2	[TSUF][TUJF][TUSF][TUWF] [TUGF] INC.2-6
2	NO PART NO.	#	RIM,OUTSIDE	ﾘﾑ	2	[TSUF][TUJF][TUSF][TUWF] [TUGF]
3	NO PART NO.	#	RIM,INSIDE	ﾘﾑ	2	[TSUF][TUJF][TUSF][TUWF] [TUGF]
4	510F3-82611		BOLT	ﾎﾞﾙﾄ	12	[TSUF][TUJF][TUSF][TUWF] [TUGF]
5	02011-00012		WASHER	ﾜｯｼｬ	12	[TSUF][TUJF][TUSF][TUWF] [TUGF]
6	01402-10012		NUT	ﾅｯﾄ	12	[TSUF][TUJF][TUSF][TUWF] [TUGF]

FRONT WHEEL (1.8T)

FIG.81 **:[TSUF][TUJF][TUSF][TUWF][TUGF]**

(F7Z144A0) **フロントホイール**

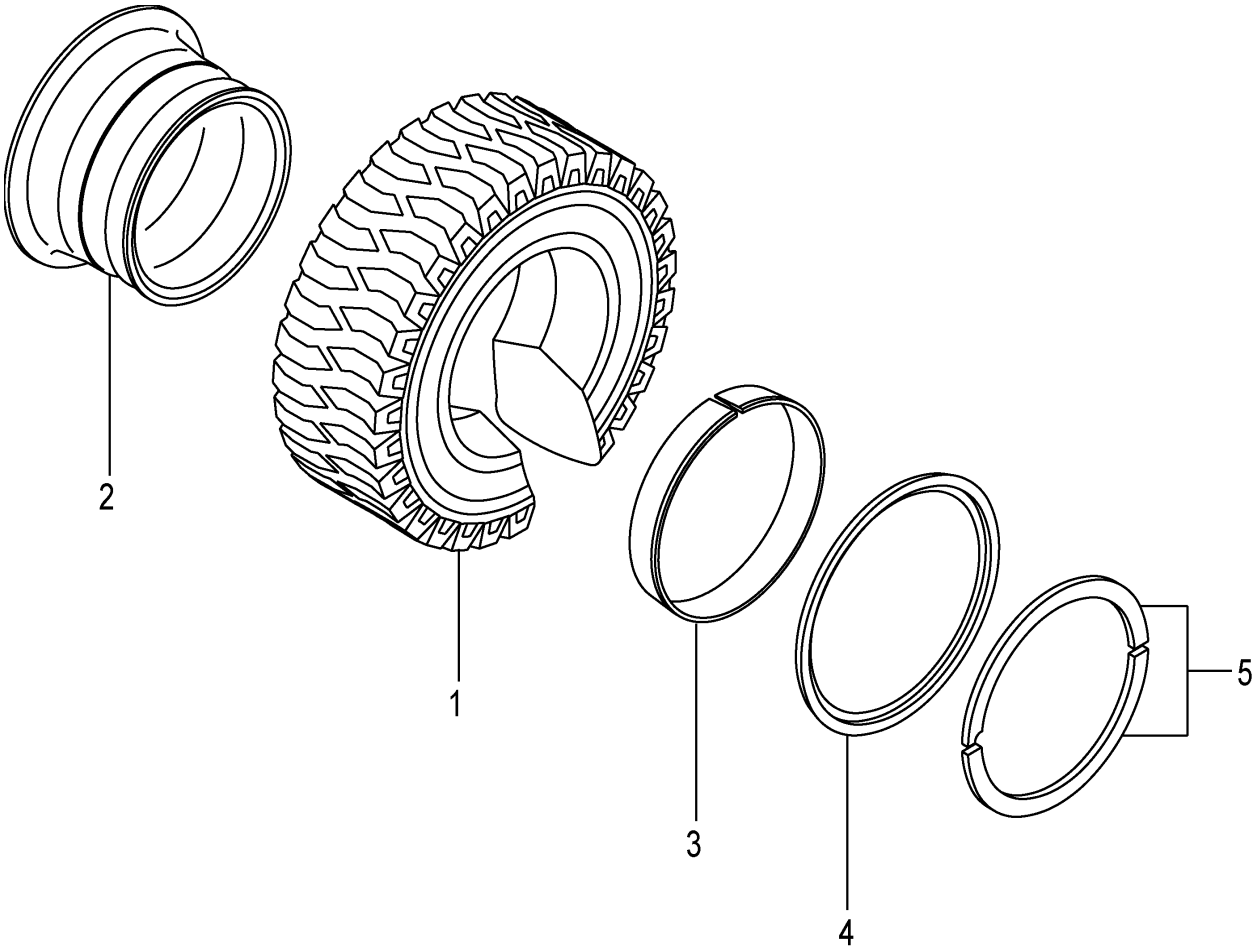

A:FHD18C3Z FHD18T3Z

Item No	Part No.	Mark	Description		Req'd	Remarks : Serial No.
A1	518J6-80201		WHEEL-ASSY,FRONT	ﾌﾛﾝﾄﾎｲｰﾙｱｯｾﾝ	2	[TSUF] INC.1-6
-	54276-80201		WHEEL-ASSY,FRONT	ﾌﾛﾝﾄﾎｲｰﾙｱｯｾﾝ	2	[TUJF] INC.1-5
-	51276-80221		WHEEL-ASSY,FRONT	ﾌﾛﾝﾄﾎｲｰﾙｱｯｾﾝ	2	[TUSF] INC.1-5
-	51276-80201		WHEEL-ASSY,FRONT	ﾌﾛﾝﾄﾎｲｰﾙｱｯｾﾝ	2	[TUWF] INC.1-5
-	51276-80211		WHEEL-ASSY,FRONT	ﾌﾛﾝﾄﾎｲｰﾙｱｯｾﾝ	2	[TUGF] INC.1-5
1	06807-65010		TIRE,SNOW,650-10	ﾀｲﾔ	2	[TSUF]
-	06806-65010		TIRE,UNIQUE,650-10	ﾀｲﾔ	2	[TUJF/AIC]
-	06805-65010		TIRE,UNIQUE,650-10	ﾀｲﾔ	2	[TUJF/DUN]
-	06853-65010		TIRE,SOFTONE,650-10	ﾀｲﾔ	2	[TUSF]
-	06841-65010		TIRE,WHITE,650-10	ﾀｲﾔ	2	[TUWF]
-	06843-65010		TIRE,GREEN,650-10	ﾀｲﾔ	2	[TUGF]
A2	24274-40501		RIM-ASSY,500F-10	ﾘﾑｱｯｾﾝ	2	[TSUF][TUJF][TUSF][TUWF] [TUGF] INC.2-5
2	NO PART NO.	#	RIM	ﾘﾑ	2	[TSUF][TUJF][TUSF][TUWF] [TUGF]
3	54236-83011		BAND	ﾊﾞﾝﾄﾞ	2	[TSUF][TUJF][TUSF][TUWF] [TUGF]
4	54236-83021		FLANGE,SIDE	ﾌﾗﾝｼﾞ	2	[TSUF][TUJF][TUSF][TUWF] [TUGF]
5	54236-83031		RING,LOCK	ﾘﾝｸﾞ	2	[TSUF][TUJF][TUSF][TUWF] [TUGF]

FIG.82 FRONT WHEEL (1.5T):[TUJF/DR F]

(F7Z144B0) フロントホイール

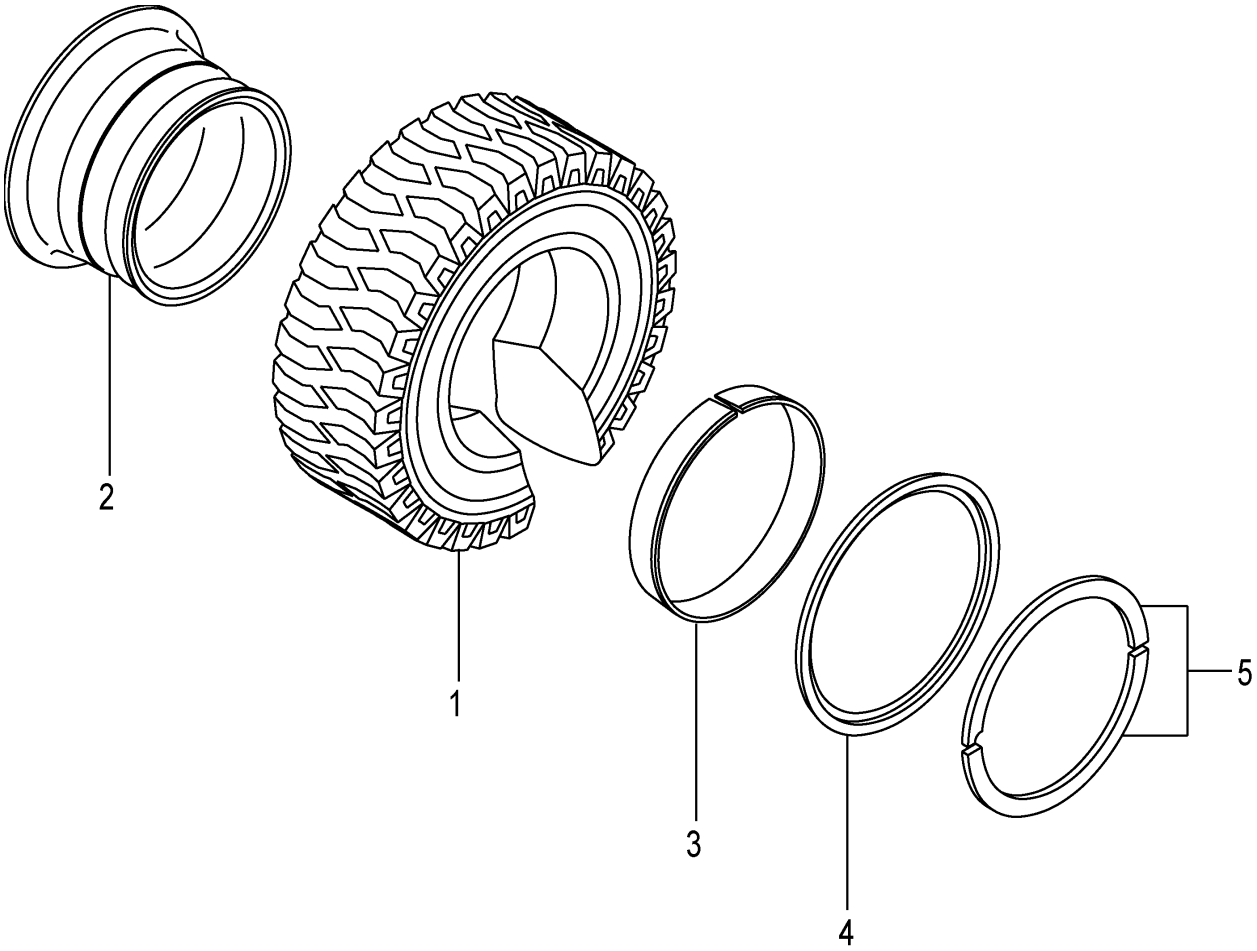

A:FHD15C3Z FHD15T3Z

Item No	Part No.	Mark	Description		Req'd	Remarks : Serial No.
A1	54236-80121		WHEEL-ASSY,FRONT	ﾌﾛﾝﾄﾎｲｰﾙｱｯｾﾝ	2	[TUJF/DR F] INC.1-5
1	06806-65010		TIRE,UNIQUE,650-10	ﾀｲﾔ	2	[TUJF/DR F]
A2	54236-80181		RIM-ASSY,500F-10	ﾘﾑｱｯｾﾝ	2	[TUJF/DR F] INC.2-5
2	NO PART NO.	#	RIM	ﾘﾑ	2	[TUJF/DR F]
3	54236-83011		BAND	ﾊﾞﾝﾄﾞ	2	[TUJF/DR F]
4	54236-83021		FLANGE,SIDE	ﾌﾗﾝｼﾞ	2	[TUJF/DR F]
5	54236-83031		RING,LOCK	ﾘﾝｸﾞ	2	[TUJF/DR F]

FIG.83 FRONT WHEEL (1.5T):[TRAF]

(F7Z144C0) フロントホイール

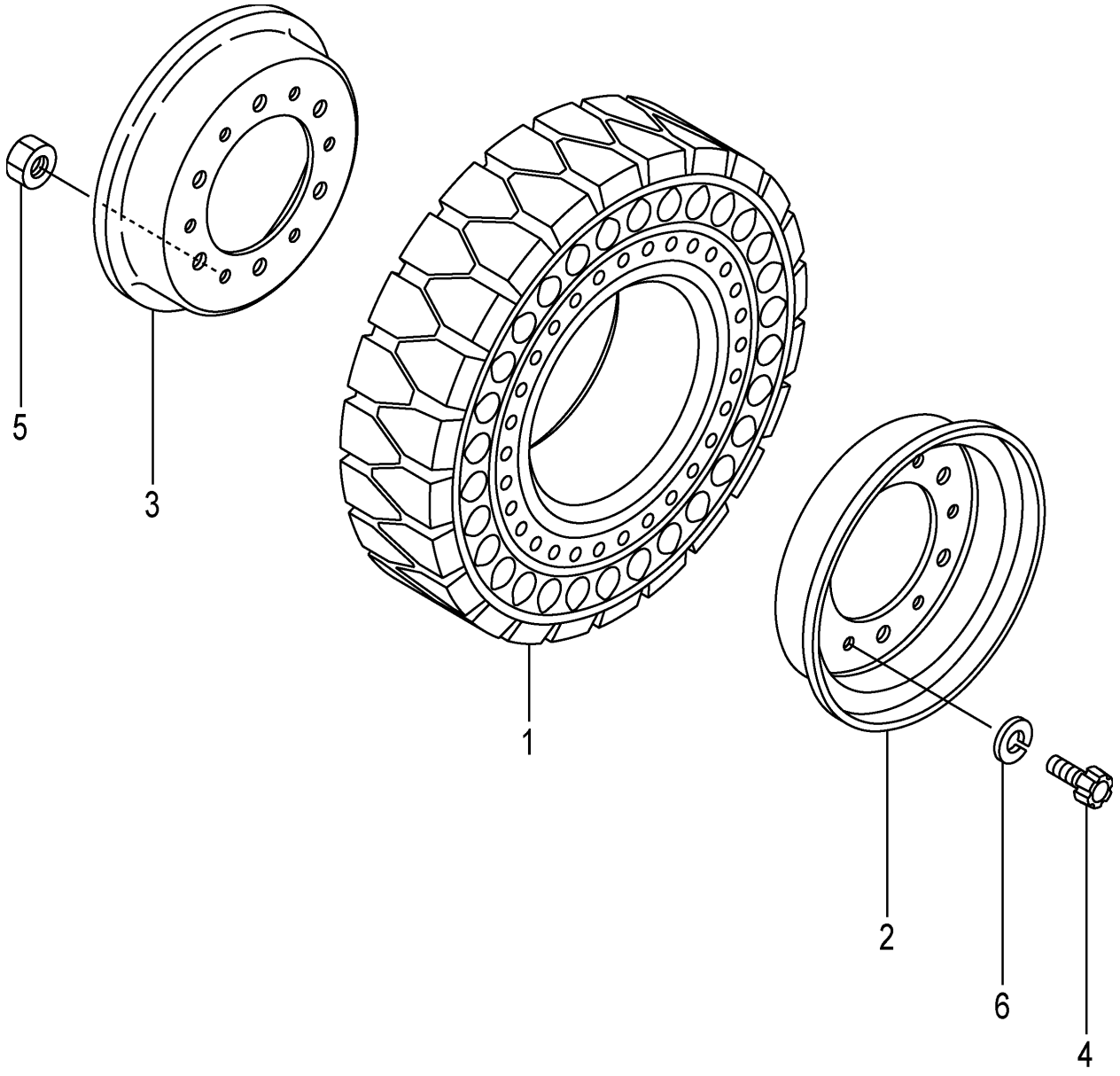

FIG.83
(F7Z144C0)

A:FHD15C3Z FHD15T3Z

Item No	Part No.	Mark	Description		Req'd	Remarks : Serial No.
A1	516G6-80171		WHEEL-ASSY,FRONT	ﾌﾛﾝﾄﾎｲｰﾙｱｯｾﾝ	2	[TRAF] INC.1-6
1	516G6-85011		TIRE,AIR-BOSS,650-10	ﾀｲﾔ	2	[TRAF]
A2	22574-40303		RIM-ASSY,500F-10	ﾘﾑｱｯｾﾝ	2	[TRAF] INC.2-6
2	NO PART NO.	#	RIM,OUTSIDE	ﾘﾑ	2	[TRAF]
3	NO PART NO.	#	RIM,INSIDE	ﾘﾑ	2	[TRAF]
4	510F3-82611		BOLT	ﾎﾞﾙﾄ	12	[TRAF]
5	01402-10012		NUT	ﾅｯﾄ	12	[TRAF]
6	02011-00012		WASHER	ﾜｯｼｬ	12	[TRAF]

FIG.84 FRONT WHEEL (1.8T):[TRAF]

(F7Z144D0) フロントホイール

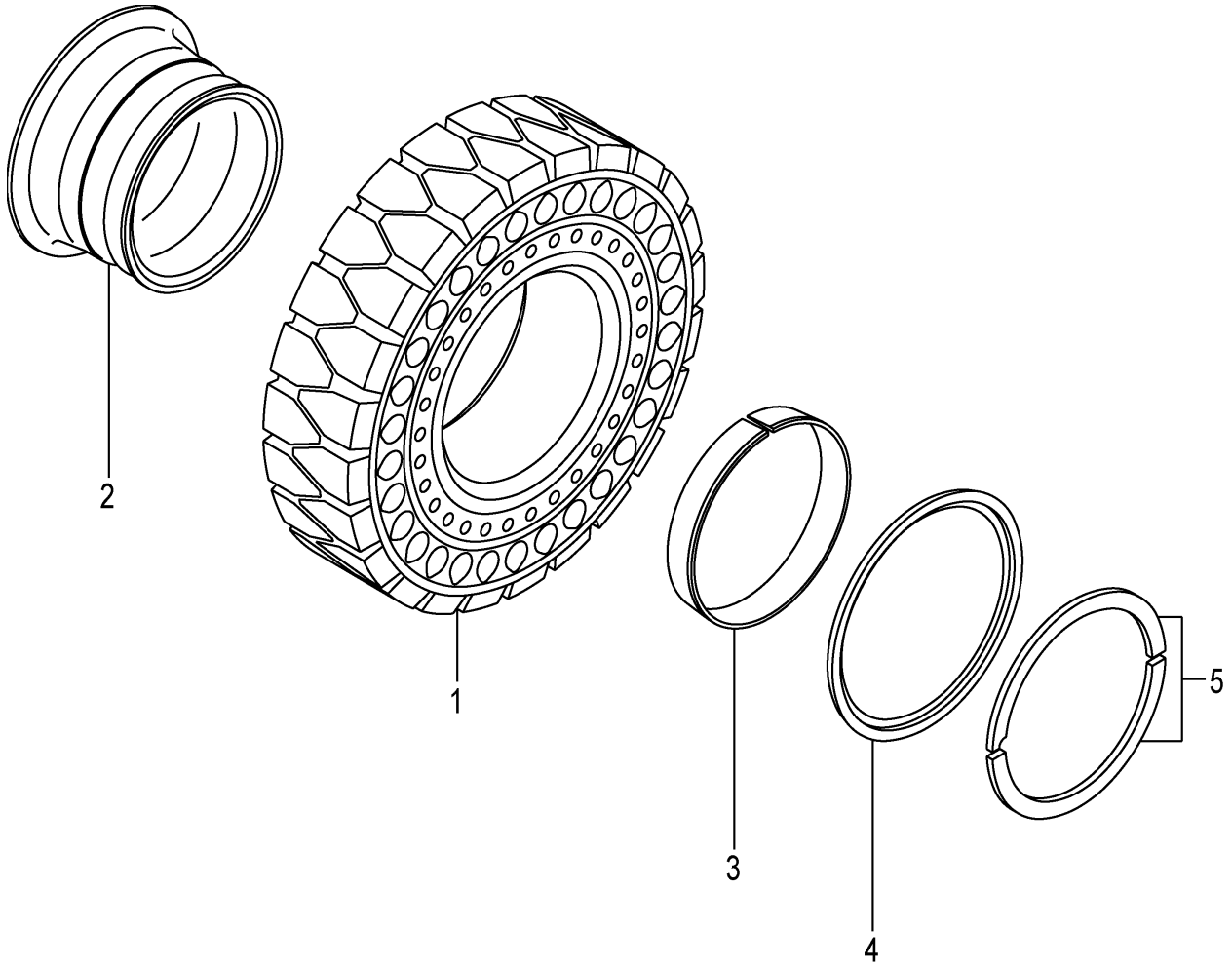

A:FHD18C3Z FHD18T3Z

Item No	Part No.	Mark	Description		Req'd	Remarks : Serial No.
A1	516K6-80171		WHEEL-ASSY,FRONT	ﾌﾛﾝﾄﾎｲｰﾙｱｯｾﾝ	2	[TRAF] INC.1-5
1	516G6-85011		TIRE,AIR-BOSS,650-10	ﾀｲﾔ	2	[TRAF]
A2	24274-40501		RIM-ASSY,500F-10	ﾘﾑｱｯｾﾝ	2	[TRAF] INC.2-5
2	NO PART NO.	#	RIM	ﾘﾑ	2	[TRAF]
3	54236-83011		BAND	ﾊﾞﾝﾄﾞ	2	[TRAF]
4	54236-83021		FLANGE,SIDE	ﾌﾗﾝｼﾞ	2	[TRAF]
5	54236-83031		RING,LOCK	ﾘﾝｸﾞ	2	[TRAF]

FIG.85 FRONT WHEEL [TJ W][TW][TS W]

(F7Z144E0) フロントホイール

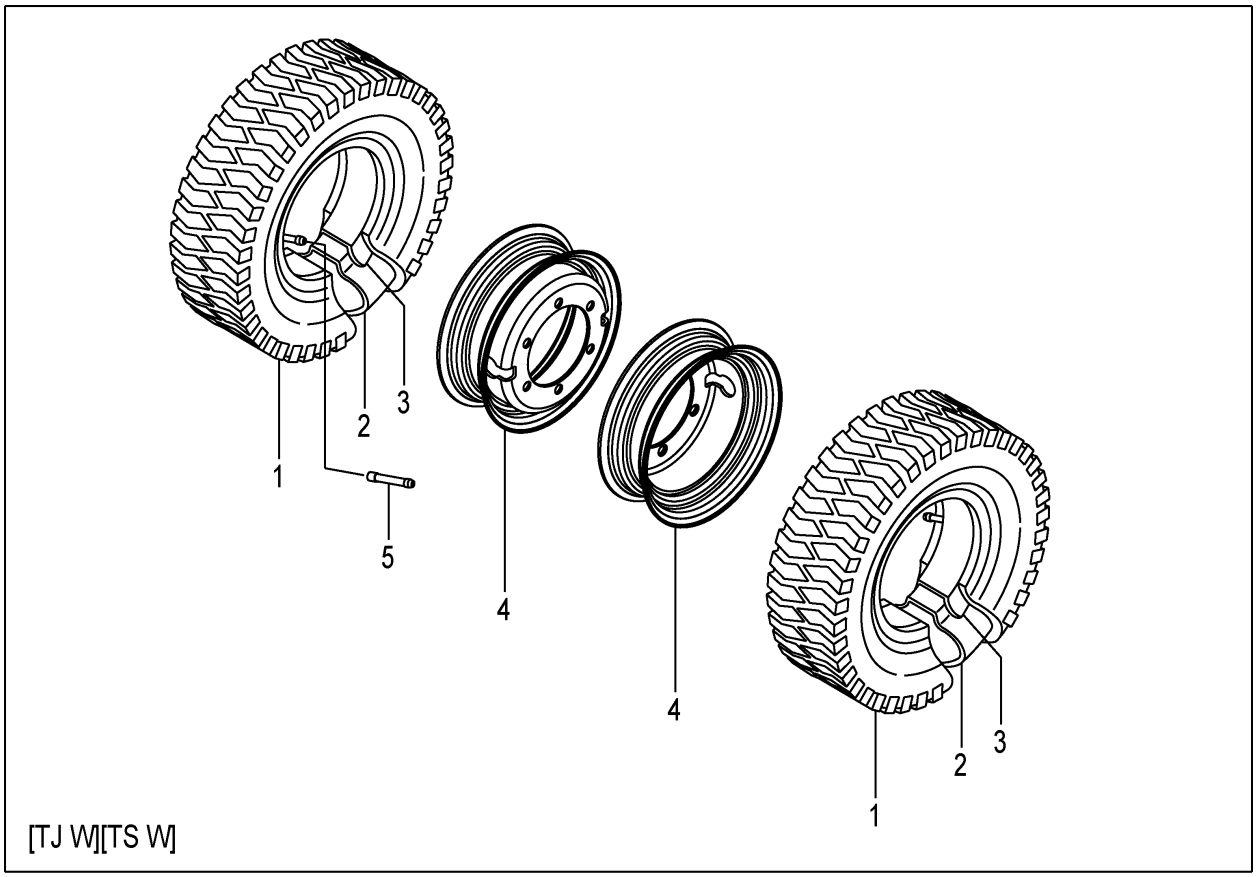

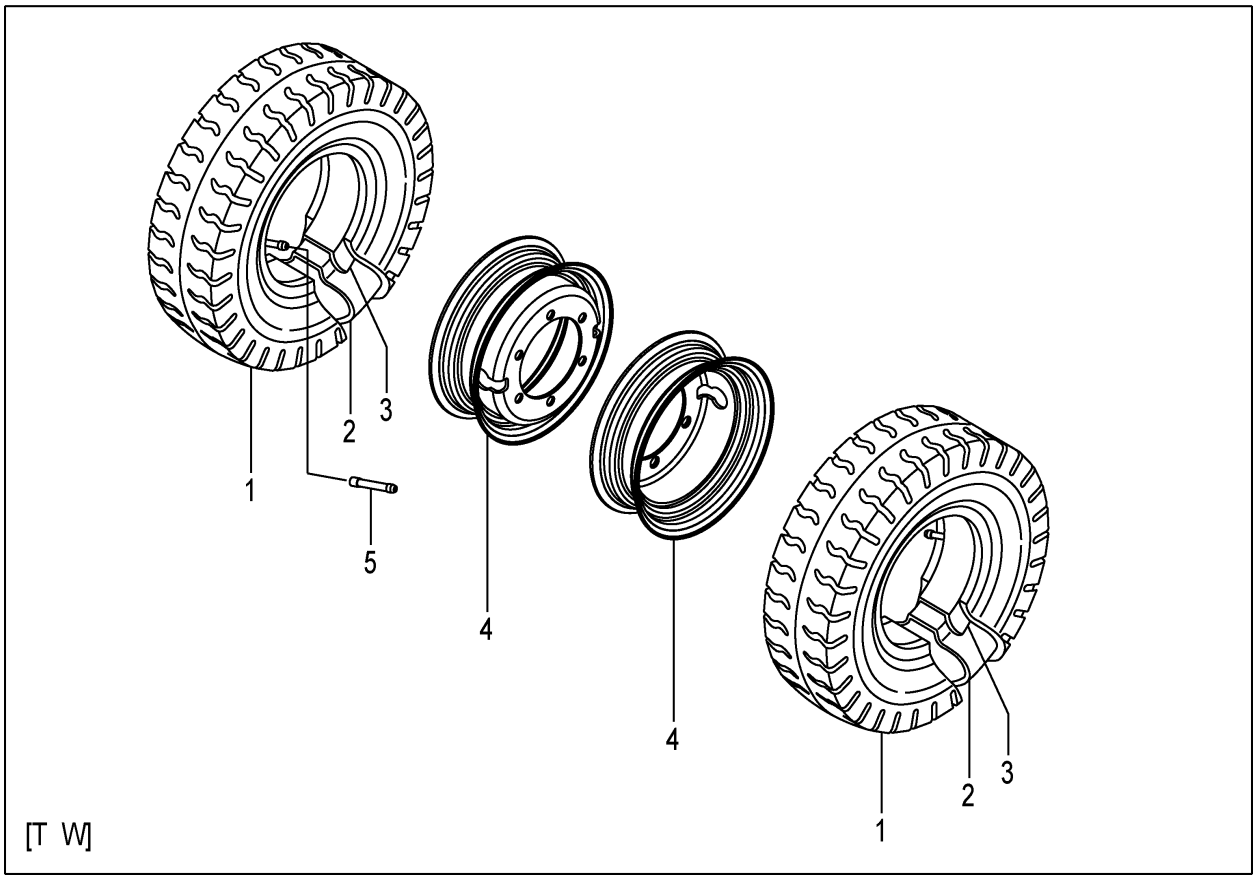

A:FHD15C3Z FHD15T3Z FHD18C3Z FHD18T3Z

Item No	Part No.	Mark	Description		Req'd	Remarks : Serial No.
A1	54236-80251		WHEEL-ASSY,FRONT	ﾌﾛﾝﾄﾎｲｰﾙｱｯｾﾝ	4	[TJ W] INC.1-4
-	52197-40002		WHEEL-ASSY,FRONT	ﾌﾛﾝﾄﾎｲｰﾙｱｯｾﾝ	4	[T W] INC.1-4
-	518G7-40701		WHEEL-ASSY,FRONT	ﾌﾛﾝﾄﾎｲｰﾙｱｯｾﾝ	4	[TS W] INC.1-4
1	06002-45012		TIRE,450-12-8	ﾀｲﾔ	4	[TJ W]
-	06001-45012		TIRE,450-12-8	ﾀｲﾔ	4	[T W]
-	06007-45012		TIRE,450-12-8	ﾀｲﾔ	4	[TS W]
2	06711-45012		TUBE,450-12-8T	ﾁｭｰﾌﾞ	4	[TJ W][T W][TS W]
3	06701-45012		FLAP,450-12-8F	ﾌﾗｯﾌﾟ	4	[TJ W][T W][TS W]
4	52197-42001		RIM,350D-12	ﾘﾑ	4	[TJ W][T W][TS W]
5	06731-00070		VALVE,EXTENSION	ﾊﾞﾙﾌﾞ	2	[TJ W][T W][TS W]

FIG.86 FRONT WHEEL [TUJW][TUSW][TUWW][TUGW]

(F7Z144F0) フロントホイール

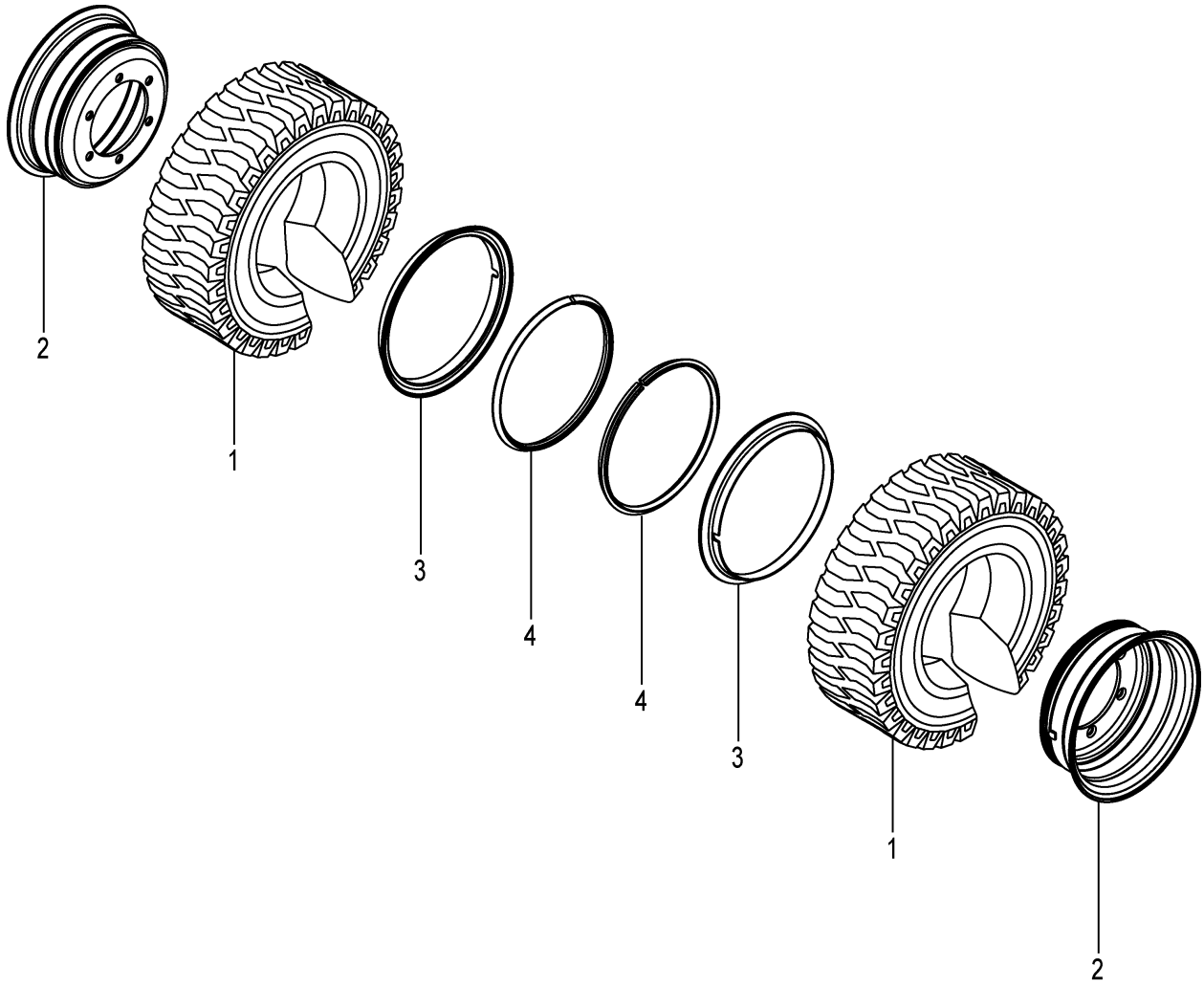

A:FHD15C3Z FHD15T3Z FHD18C3Z FHD18T3Z

Item No	Part No.	Mark	Description		Req'd	Remarks : Serial No.
A1	54236-80201		WHEEL-ASSY,FRONT	ﾌﾛﾝﾄﾎｲｰﾙｱｯｾﾝ	4	[TUJW] INC.1,2
-	51236-80321		WHEEL-ASSY,FRONT	ﾌﾛﾝﾄﾎｲｰﾙｱｯｾﾝ	4	[TUSW] INC.1,2
-	51236-80301		WHEEL-ASSY,FRONT	ﾌﾛﾝﾄﾎｲｰﾙｱｯｾﾝ	4	[TUWW] INC.1,2
-	51236-80311		WHEEL-ASSY,FRONT	ﾌﾛﾝﾄﾎｲｰﾙｱｯｾﾝ	4	[TUGW] INC.1,2
1	06806-45012		TIRE,UNIQUE,450-12	ﾀｲﾔ	4	[TUJW]
-	06851-45012		TIRE,SOFTONE,450-12	ﾀｲﾔ	4	[TUSW]
-	06841-45012		TIRE,WHITE,450-12	ﾀｲﾔ	4	[TUWW]
-	06843-45012		TIRE,GREEN,450-12	ﾀｲﾔ	4	[TUGW]
A2	52577-52001		RIM-ASSY,300D-12	ﾘﾑｱｯｾﾝ	4	[TUJW][TUSW][TUWW][TUGW] INC.2-4
2	NO PART NO.	#	RIM	ﾘﾑ	4	[TUJW][TUSW][TUWW][TUGW]
3	NO PART NO.		RING,SIDE	ﾘﾝｸﾞ	4	[TUJW][TUSW][TUWW][TUGW]
4	NO PART NO.		RING,LOCK	ﾘﾝｸﾞ	4	[TUJW][TUSW][TUWW][TUGW]

FIG.87 FRONT WHEEL [TJ W65][TJSW65][TW65][TS W65]

(F7Z144G0) フロントホイール

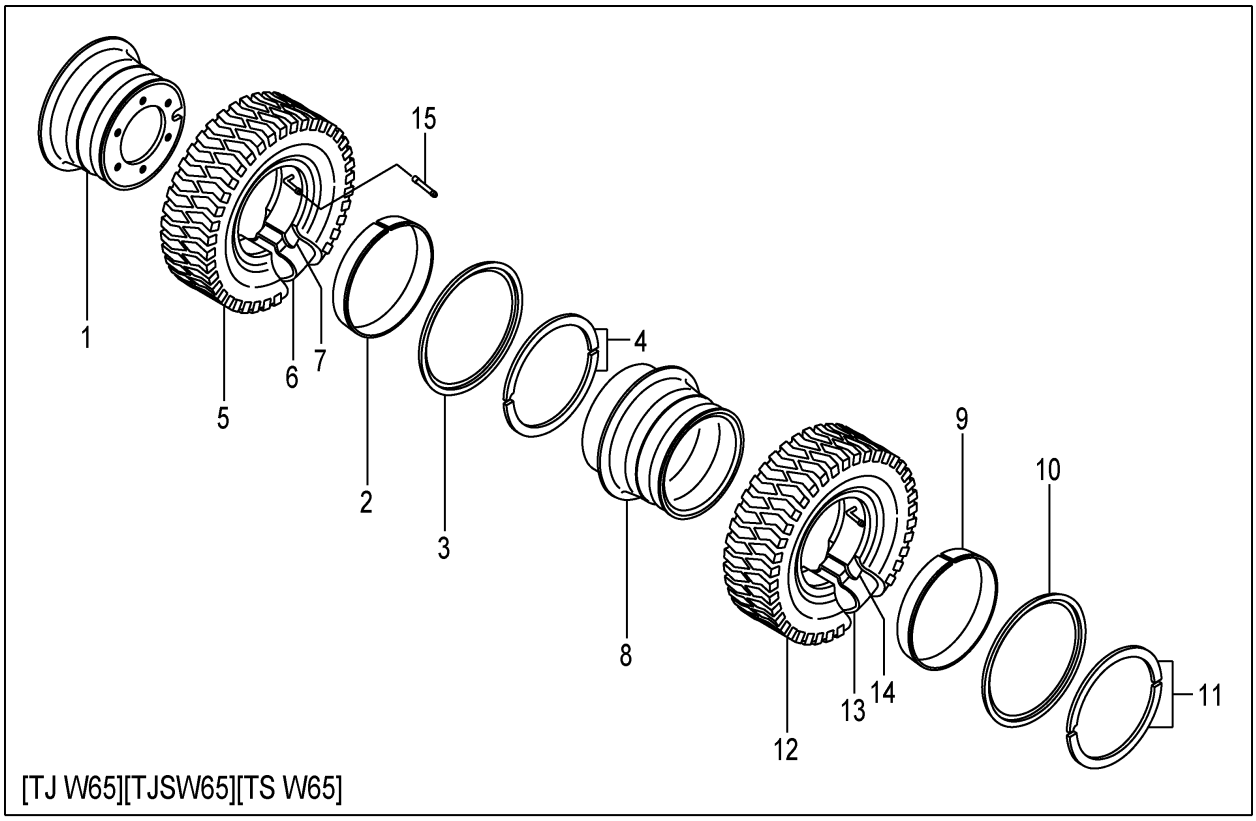

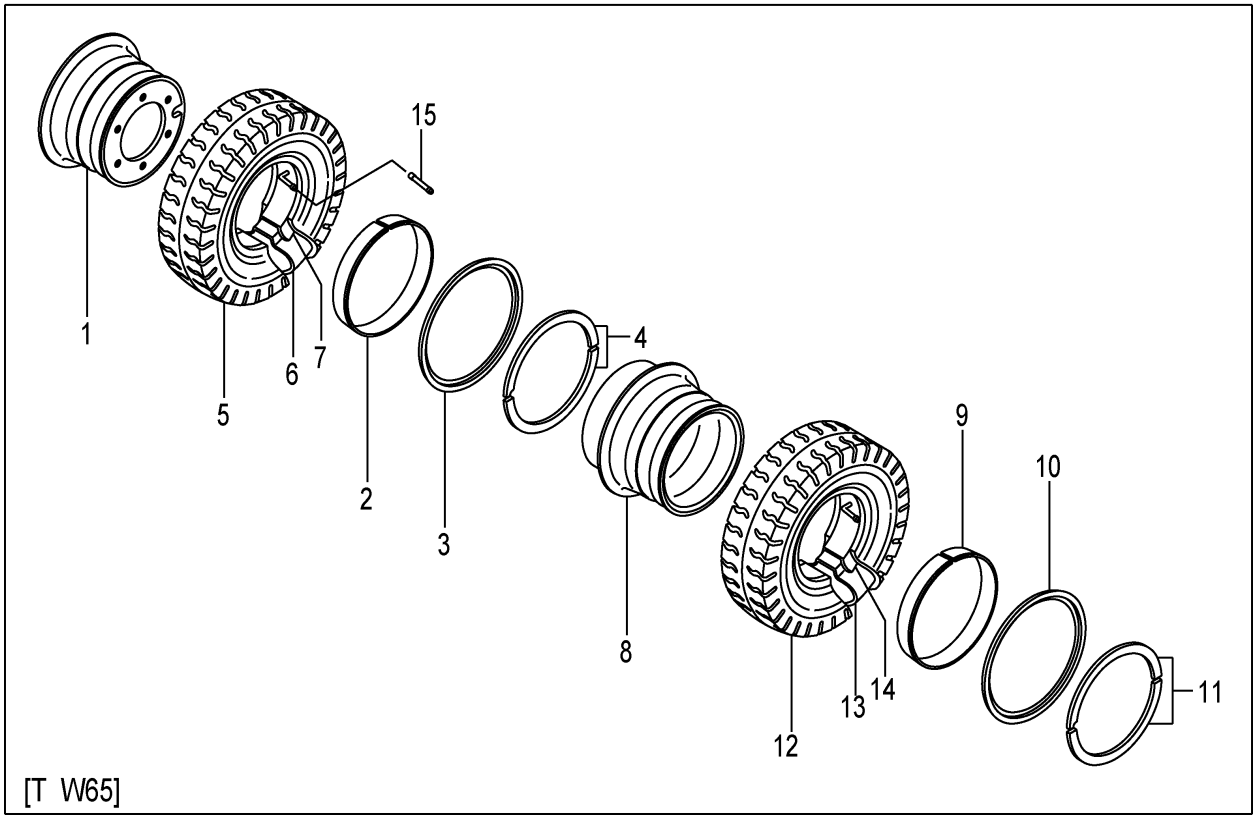

A:FHD15C3Z FHD15T3Z FHD18C3Z FHD18T3Z

Item No	Part No.	Mark	Description		Req'd	Remarks : Serial No.
A1	54236-80701		WHEEL-ASSY,FRONT-IN	ﾌﾛﾝﾄﾎｲｰﾙｱｯｾﾝ	2	[TJ W65] INC.1-7
-	54236-80601		WHEEL-ASSY,FRONT-IN	ﾌﾛﾝﾄﾎｲｰﾙｱｯｾﾝ	2	[TJSW65] INC.1-7
-	54236-80301		WHEEL-ASSY,FRONT-IN	ﾌﾛﾝﾄﾎｲｰﾙｱｯｾﾝ	2	[T W65] INC.1-7
-	54236-80801		WHEEL-ASSY,FRONT-IN	ﾌﾛﾝﾄﾎｲｰﾙｱｯｾﾝ	2	[TS W65] INC.1-7
A2	54236-81001		RIM-ASSY,500F-10	ﾘﾑｱｯｾﾝ	2	[TJ W65][TJSW65][T W65] [TS W65] INC.1-4
1	NO PART NO.	#	RIM	ﾘﾑ	2	[TJ W65][TJSW65][T W65] [TS W65]
2	54236-83011		BAND	ﾊﾞﾝﾄﾞ	2	[TJ W65][TJSW65][T W65] [TS W65]
3	54236-83021		FLANGE,SIDE	ﾌﾗﾝｼﾞ	2	[TJ W65][TJSW65][T W65] [TS W65]
4	54236-83031		RING,LOCK	ﾘﾝｸﾞ	2	[TJ W65][TJSW65][T W65] [TS W65]
5	06006-65010		TIRE,650-10-10	ﾀｲﾔ	2	[TJ W65]
-	06005-65010		TIRE,650-10-10	ﾀｲﾔ	2	[TJSW65]
-	06001-65010		TIRE,650-10-10	ﾀｲﾔ	2	[T W65]
-	06007-65010		TIRE,650-10-10	ﾀｲﾔ	2	[TS W65]
6	06711-65010		TUBE,650-10-10T	ﾁｭｰﾌﾞ	2	[TJ W65][TJSW65][T W65] [TS W65]
7	06701-65010		FLAP,650-10-10F	ﾌﾗｯﾌﾟ	2	[TJ W65][TJSW65][T W65] [TS W65]
A3	54236-80711		WHEEL-ASSY,FRONT-OUT	ﾌﾛﾝﾄﾎｲｰﾙｱｯｾﾝ	2	[TJ W65] INC.8-14
-	54236-80611		WHEEL-ASSY,FRONT-OUT	ﾌﾛﾝﾄﾎｲｰﾙｱｯｾﾝ	2	[TJSW65] INC.8-14
-	54236-80311		WHEEL-ASSY,FRONT-OUT	ﾌﾛﾝﾄﾎｲｰﾙｱｯｾﾝ	2	[T W65] INC.8-14
-	54236-80811		WHEEL-ASSY,FRONT-OUT	ﾌﾛﾝﾄﾎｲｰﾙｱｯｾﾝ	2	[TS W65] INC.8-14
A4	54236-81011		RIM-ASSY,500F-10	ﾘﾑｱｯｾﾝ	2	[TJ W65][TJSW65][T W65] [TS W65] INC.8-11
8	NO PART NO.	#	RIM	ﾘﾑ	2	[TJ W65][TJSW65][T W65] [TS W65]
9	54236-83011		BAND	ﾊﾞﾝﾄﾞ	2	[TJ W65][TJSW65][T W65] [TS W65]
10	54236-83021		FLANGE,SIDE	ﾌﾗﾝｼﾞ	2	[TJ W65][TJSW65][T W65] [TS W65]
11	54236-83031		RING,LOCK	ﾘﾝｸﾞ	2	[TJ W65][TJSW65][T W65] [TS W65]
12	06006-65010		TIRE,650-10-10	ﾀｲﾔ	2	[TJ W65]
-	06005-65010		TIRE,650-10-10	ﾀｲﾔ	2	[TJSW65]
-	06001-65010		TIRE,650-10-10	ﾀｲﾔ	2	[T W65]
-	06007-65010		TIRE,650-10-10	ﾀｲﾔ	2	[TS W65]
13	06711-65010		TUBE,650-10-10T	ﾁｭｰﾌﾞ	2	[TJ W65][TJSW65][T W65] [TS W65]
14	06701-65010		FLAP,650-10-10F	ﾌﾗｯﾌﾟ	2	[TJ W65][TJSW65][T W65] [TS W65]
15	06731-00120		TUBE,EXTENSION	ﾁｭｰﾌﾞ	2	[TJ W65][TJSW65][T W65] [TS W65]

FIG.88 FRONT WHEEL [TUJW65][TUSW65][TUWW65][TUGW65]

(F7Z144H0) フロントホイール

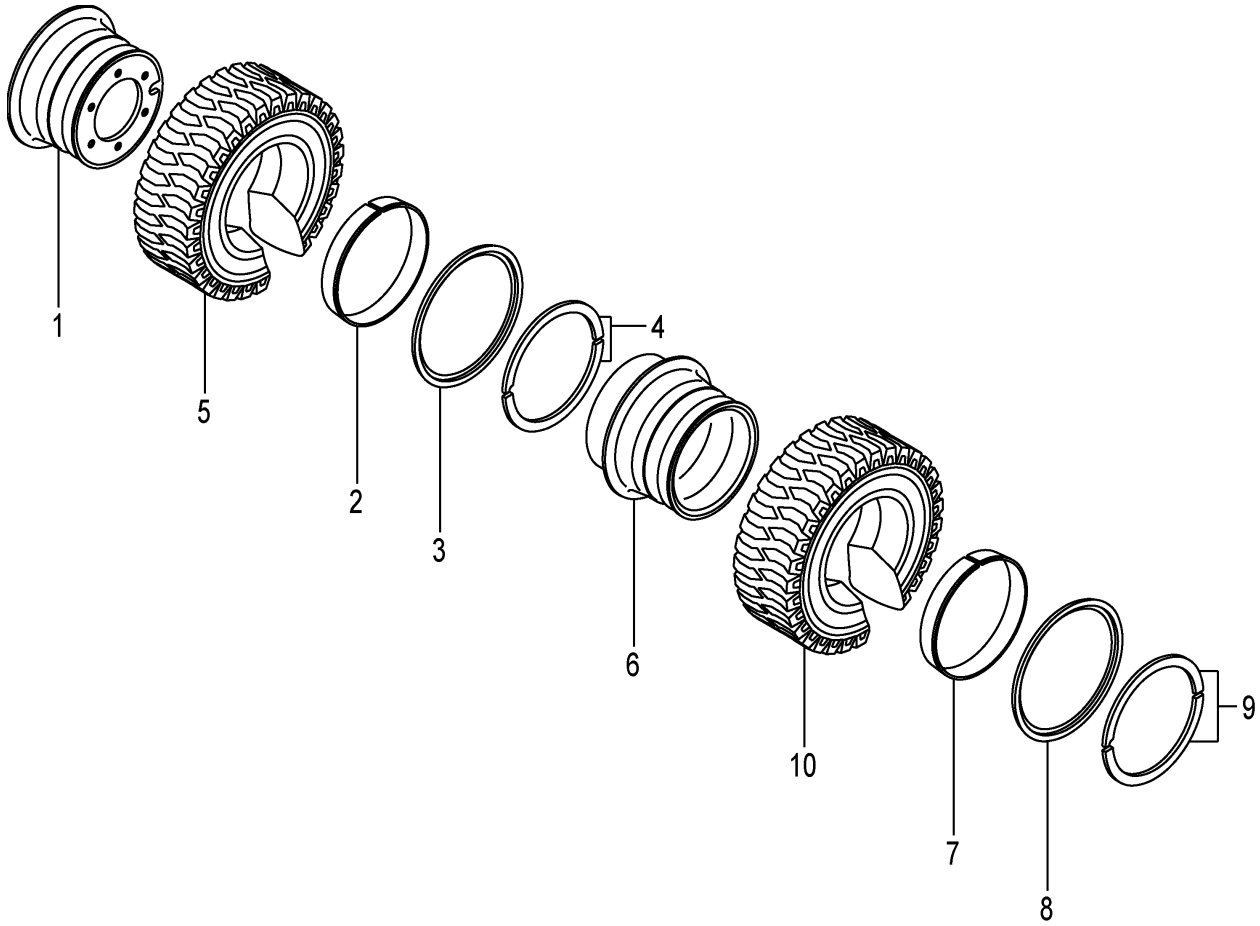

A:FHD15C3Z FHD15T3Z FHD18C3Z FHD18T3Z

Item No	Part No.	Mark	Description		Req'd	Remarks : Serial No.
A1	54236-80501		WHEEL-ASSY,FRONT-IN	ﾌﾛﾝﾄﾎｲｰﾙｱｯｾﾝ	2	[TUJW65] INC.1-5
-	51236-80441		WHEEL-ASSY,FRONT-IN	ﾌﾛﾝﾄﾎｲｰﾙｱｯｾﾝ	2	[TUSW65] INC.1-5
-	51236-80401		WHEEL-ASSY,FRONT-IN	ﾌﾛﾝﾄﾎｲｰﾙｱｯｾﾝ	2	[TUWW65] INC.1-5
-	51236-80421		WHEEL-ASSY,FRONT-IN	ﾌﾛﾝﾄﾎｲｰﾙｱｯｾﾝ	2	[TUGW65] INC.1-5
A2	54236-81001		RIM-ASSY,500F-10	ﾘﾑｱｯｾﾝ	2	[TUJW65][TUSW65][TUWW65] [TUGW65] INC.1-4
1	NO PART NO.	#	RIM	ﾘﾑ	2	[TUJW65][TUSW65][TUWW65] [TUGW65]
2	54236-83011		BAND	ﾊﾞﾝﾄﾞ	2	[TUJW65][TUSW65][TUWW65] [TUGW65]
3	54236-83021		FLANGE,SIDE	ﾌﾗﾝｼﾞ	2	[TUJW65][TUSW65][TUWW65] [TUGW65]
4	54236-83031		RING,LOCK	ﾘﾝｸﾞ	2	[TUJW65][TUSW65][TUWW65] [TUGW65]
5	06806-65010		TIRE,UNIQUE,650-10	ﾀｲﾔ	2	[TUJW65/AIC]
-	06805-65010		TIRE,UNIQUE,650-10	ﾀｲﾔ	2	[TUJW65/DUN]
-	06853-65010		TIRE,SOFTONE,650-10	ﾀｲﾔ	2	[TUSW65]
-	06841-65010		TIRE,WHITE,650-10	ﾀｲﾔ	2	[TUWW65]
-	06843-65010		TIRE,GREEN,650-10	ﾀｲﾔ	2	[TUGW65]
A3	54236-80511		WHEEL-ASSY,FRONT-OUT	ﾌﾛﾝﾄﾎｲｰﾙｱｯｾﾝ	2	[TUJW65] INC.6-10
-	51236-80451		WHEEL-ASSY,FRONT-OUT	ﾌﾛﾝﾄﾎｲｰﾙｱｯｾﾝ	2	[TUSW65] INC.6-10
-	51236-80411		WHEEL-ASSY,FRONT-OUT	ﾌﾛﾝﾄﾎｲｰﾙｱｯｾﾝ	2	[TUWW65] INC.6-10
-	51236-80431		WHEEL-ASSY,FRONT-OUT	ﾌﾛﾝﾄﾎｲｰﾙｱｯｾﾝ	2	[TUGW65] INC.6-10
A4	54236-81011		RIM-ASSY,500F-10	ﾘﾑｱｯｾﾝ	2	[TUJW65][TUSW65][TUWW65] [TUGW65] INC.6-9
6	NO PART NO.	#	RIM	ﾘﾑ	2	[TUJW65][TUSW65][TUWW65] [TUGW65]
7	54236-83011		BAND	ﾊﾞﾝﾄﾞ	2	[TUJW65][TUSW65][TUWW65] [TUGW65]
8	54236-83021		FLANGE,SIDE	ﾌﾗﾝｼﾞ	2	[TUJW65][TUSW65][TUWW65] [TUGW65]
9	54236-83031		RING,LOCK	ﾘﾝｸﾞ	2	[TUJW65][TUSW65][TUWW65] [TUGW65]
10	06806-65010		TIRE,UNIQUE,650-10	ﾀｲﾔ	2	[TUJW65/AIC]
-	06805-65010		TIRE,UNIQUE,650-10	ﾀｲﾔ	2	[TUJW65/DUN]
-	06853-65010		TIRE,SOFTONE,650-10	ﾀｲﾔ	2	[TUSW65]
-	06841-65010		TIRE,WHITE,650-10	ﾀｲﾔ	2	[TUWW65]
-	06843-65010		TIRE,GREEN,650-10	ﾀｲﾔ	2	[TUGW65]

FIG.89 REAR WHEEL

(F7Z144J0) リヤーホイール

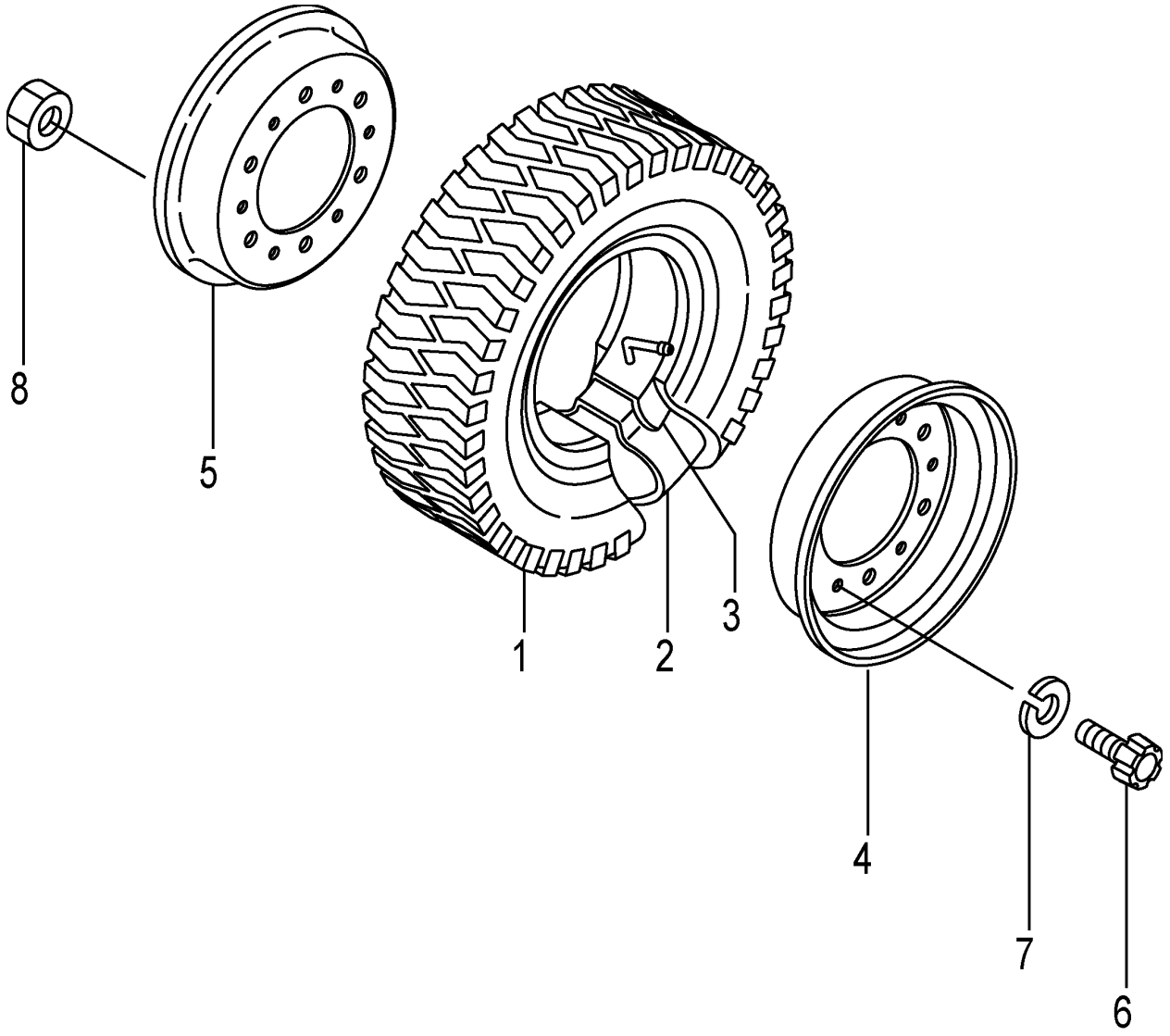

A:FHD15C3Z FHD15T3Z FHD18C3Z FHD18T3Z

Item No	Part No.	Mark	Description		Req'd	Remarks : Serial No.
A1	54236-81201		WHEEL-ASSY,REAR	ﾘﾔｰﾎｲｰﾙｱｯｾﾝ	2	INC.1-8
1	06006-50008		TIRE,500-8-8	ﾀｲﾔ	2	
2	06711-50008		TUBE,500-8-8T	ﾁｭｰﾌﾞ	2	
3	06701-50008		FLAP,500-8-8F	ﾌﾗｯﾌﾟ	2	
A2	52516-80302		RIM-ASSY,300D-8	ﾘﾑｱｯｾﾝ	2	INC.4-8
4	NO PART NO.	#	RIM,OUTSIDE	ﾘﾑ	2	
5	NO PART NO.	#	RIM,INSIDE	ﾘﾑ	2	
6	514A3-82611		BOLT	ﾎﾞﾙﾄ	12	
7	02011-00012		WASHER	ﾜｯｼｬ	12	
8	01400-10012		NUT	ﾅｯﾄ	12	

FIG.90 REAR WHEEL [DR R]

(F7Z144K0) リヤーホイール

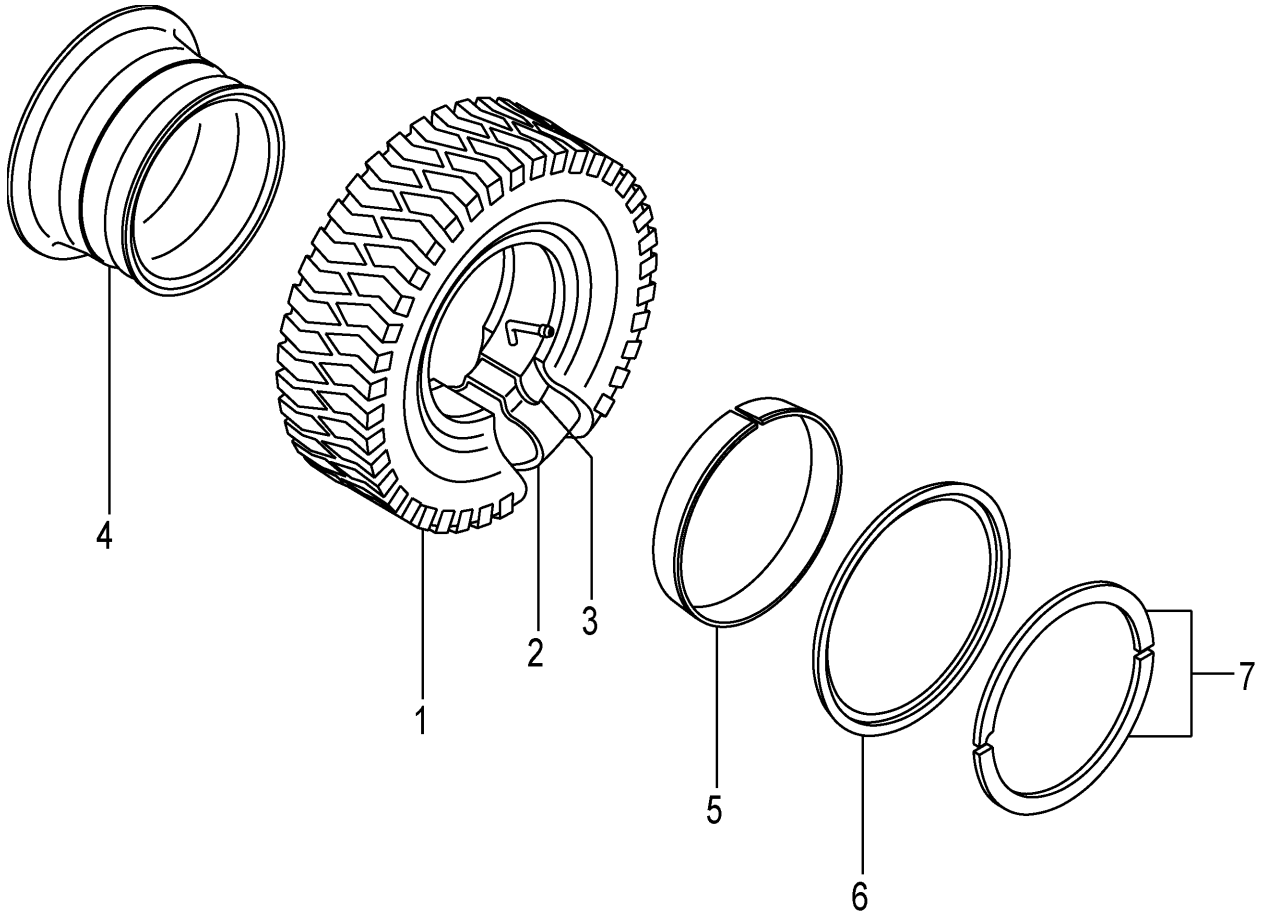

A:FHD15C3Z FHD15T3Z FHD18C3Z FHD18T3Z

Item No	Part No.	Mark	Description		Req'd	Remarks : Serial No.
A1	54236-81541		WHEEL-ASSY,REAR	ﾘﾔｰﾎｲｰﾙｱｯｾﾝ	2	[DR R] INC.1-7
1	06006-50008		TIRE,500-8-8	ﾀｲﾔ	2	[DR R]
2	06711-50008		TUBE,500-8-8T	ﾁｭｰﾌﾞ	2	[DR R]
3	06701-50008		FLAP,500-8-8F	ﾌﾗｯﾌﾟ	2	[DR R]
A2	54236-81601		RIM-ASSY,300D-8	ﾘﾑｱｯｾﾝ	2	[DR R] INC.4-7
4	NO PART NO.	#	RIM	ﾘﾑ	2	[DR R]
5	54236-83081		FLANGE,SIDE	ﾌﾗﾝｼﾞ	2	[DR R]
6	54236-83091		RING,LOCK	ﾘﾝｸﾞ	2	[DR R]
7	54236-83101		BAND	ﾊﾞﾝﾄﾞ	2	[DR R]

FIG.91 REAR WHEEL [TJ R][TJSR][TR][TS R]

(F7Z144L0) リヤーホイール

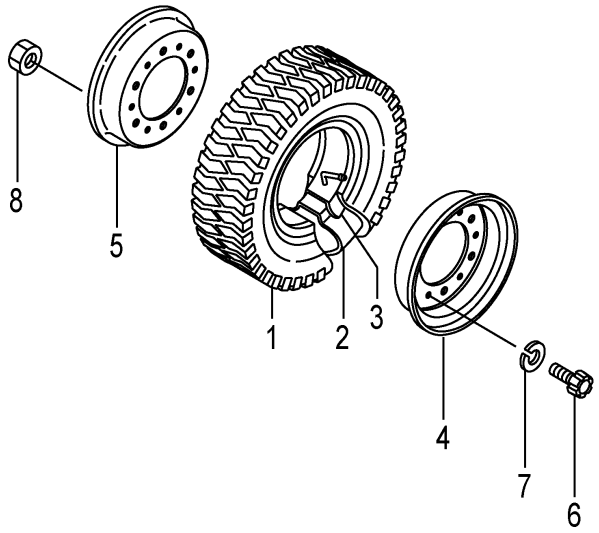

[TJ R][TJSR][TS R]

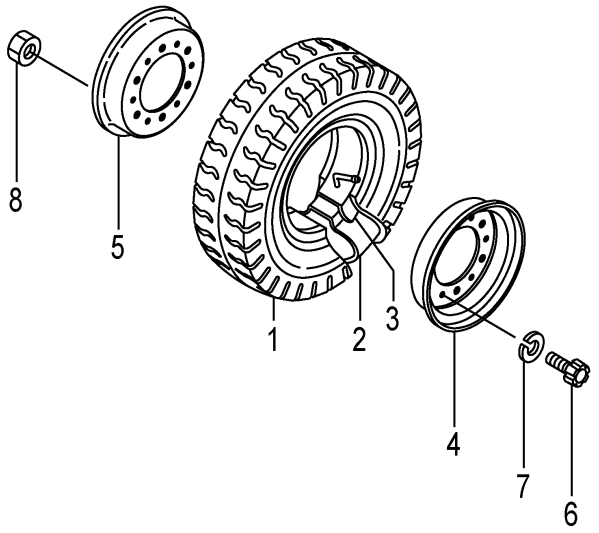

[T R]

A:FHD15C3Z FHD15T3Z FHD18C3Z FHD18T3Z

Item No	Part No.	Mark	Description		Req'd	Remarks : Serial No.
A1	54236-81201		WHEEL-ASSY,REAR	ﾘﾔｰﾎｲｰﾙｱｯｾﾝ	2	[TJ R] INC.1-8
-	54236-81101		WHEEL-ASSY,REAR	ﾘﾔｰﾎｲｰﾙｱｯｾﾝ	2	[TJSR] INC.1-8
-	24234-40201		WHEEL-ASSY,REAR	ﾘﾔｰﾎｲｰﾙｱｯｾﾝ	2	[T R] INC.1-8
-	54236-81301		WHEEL-ASSY,REAR	ﾘﾔｰﾎｲｰﾙｱｯｾﾝ	2	[TS R] INC.1-8
1	06006-50008		TIRE,500-8-8	ﾀｲﾔ	2	[TJ R]
-	06005-50008		TIRE,500-8-8	ﾀｲﾔ	2	[TJSR]
-	06001-50008		TIRE,500-8-8	ﾀｲﾔ	2	[T R]
-	06007-50008		TIRE,500-8-8	ﾀｲﾔ	2	[TS R]
2	06711-50008		TUBE,500-8-8T	ﾁｭｰﾌﾞ	2	[TJ R][TJSR][T R][TS R]
3	06701-50008		FLAP,500-8-8F	ﾌﾗｯﾌﾟ	2	[TJ R][TJSR][T R][TS R]
A2	52516-80302		RIM-ASSY,300D-8	ﾘﾑｱｯｾﾝ	2	[TJ R][TJSR][T R][TS R] INC.4-8
4	NO PART NO.	#	RIM,OUTSIDE	ﾘﾑ	2	[TJ R][TJSR][T R][TS R]
5	NO PART NO.	#	RIM,INSIDE	ﾘﾑ	2	[TJ R][TJSR][T R][TS R]
6	514A3-82611		BOLT	ﾎﾞﾙﾄ	12	[TJ R][TJSR][T R][TS R]
7	02011-00012		WASHER	ﾜｯｼｬ	12	[TJ R][TJSR][T R][TS R]
8	01400-10012		NUT	ﾅｯﾄ	12	[TJ R][TJSR][T R][TS R]

FIG.92 REAR WHEEL [(TJ R,TJSR,TR,TS R)/DR R]

(F7Z144M0) リヤーホイール

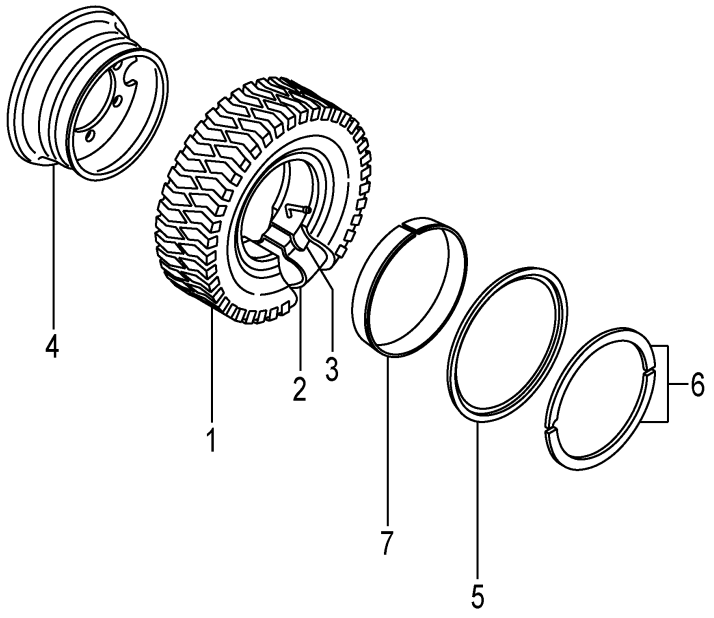

[TJ R/DR R][TJSR/DR R][TS R/DR R]

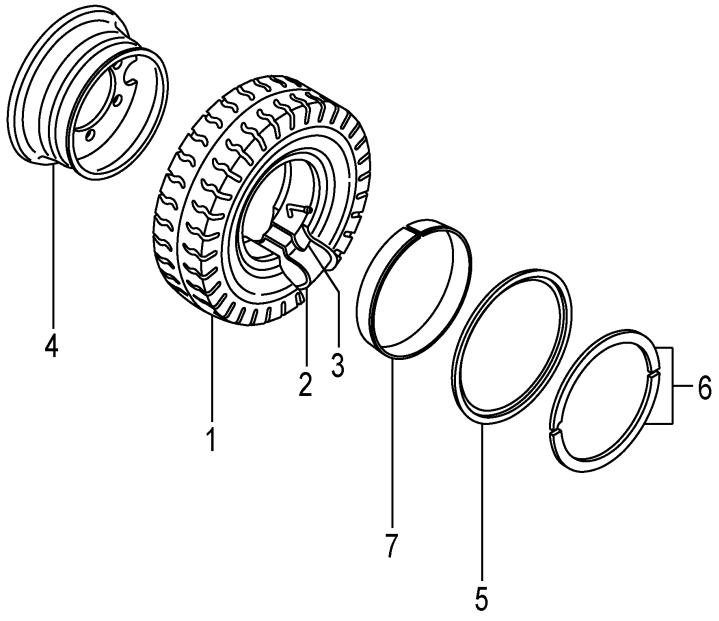

[T R/DR R]

A:FHD15C3Z FHD15T3Z FHD18C3Z FHD18T3Z

Item No	Part No.	Mark	Description		Req'd	Remarks : Serial No.
A1	54236-81541		WHEEL-ASSY,REAR	ﾘﾔｰﾎｲｰﾙｱｯｾﾝ	2	[TJ R/DR R] INC.1-7
-	54236-81531		WHEEL-ASSY,REAR	ﾘﾔｰﾎｲｰﾙｱｯｾﾝ	2	[TJSR/DR R] INC.1-7
-	54236-81501		WHEEL-ASSY,REAR	ﾘﾔｰﾎｲｰﾙｱｯｾﾝ	2	[T R/DR R] INC.1-7
-	54236-81551		WHEEL-ASSY,REAR	ﾘﾔｰﾎｲｰﾙｱｯｾﾝ	2	[TS R/DR R] INC.1-7
1	06006-50008		TIRE,500-8-8	ﾀｲﾔ	2	[TJ R/DR R]
-	06005-50008		TIRE,500-8-8	ﾀｲﾔ	2	[TJSR/DR R]
-	06001-50008		TIRE,500-8-8	ﾀｲﾔ	2	[T R/DR R]
-	06007-50008		TIRE,500-8-8	ﾀｲﾔ	2	[TS R/DR R]
2	06711-50008		TUBE,500-8-8T	ﾁｭｰﾌﾞ	2	[TJ R/DR R][TJSR/DR R]
						[T R/DR R][TS R/DR R]
3	06701-50008		FLAP,500-8-8F	ﾌﾗｯﾌﾟ	2	[TJ R/DR R][TJSR/DR R]
						[T R/DR R][TS R/DR R]
A2	54236-81601		RIM-ASSY,300D-8	ﾘﾑｱｯｾﾝ	2	[TJ R/DR R][TJSR/DR R] INC.4-7
-	54236-81601		RIM-ASSY,300D-8	ﾘﾑｱｯｾﾝ	2	[T R/DR R][TS R/DR R] INC.4-7
4	NO PART NO.	#	RIM	ﾘﾑ	2	[TJ R/DR R][TJSR/DR R]
						[T R/DR R][TS R/DR R]
5	54236-83081		FLANGE,SIDE	ﾌﾗﾝｼﾞ	2	[TJ R/DR R][TJSR/DR R]
						[T R/DR R][TS R/DR R]
6	54236-83091		RING,LOCK	ﾘﾝｸﾞ	2	[TJ R/DR R][TJSR/DR R]
						[T R/DR R][TS R/DR R]
7	54236-83101		BAND	ﾊﾞﾝﾄﾞ	2	[TJ R/DR R][TJSR/DR R]
						[T R/DR R][TS R/DR R]

FIG.93 REAR WHEEL [TSUR][TUJR][TUSR][TUWR][TUGR]

(F7Z144N0) リヤーホイール

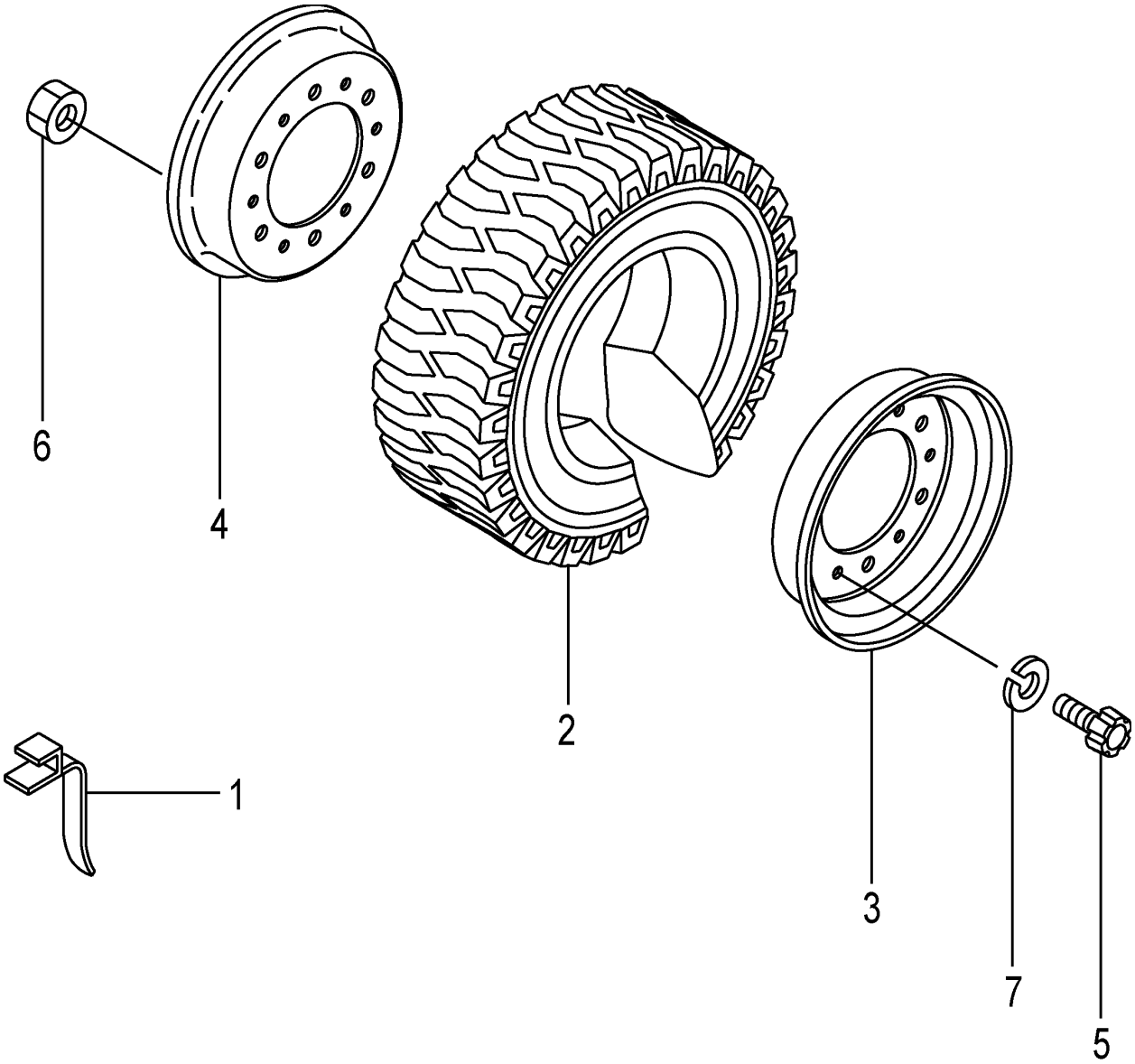

A:FHD15C3Z FHD15T3Z
B:FHD18C3Z FHD18T3Z

Item No	Part No.	Mark	Description		Req'd	Remarks : Serial No.
1	571A6-82081		BELT,EARTH	ﾍﾞﾙﾄ	1	[TUWR][TUGR]
A1	518G6-80301		WHEEL-ASSY,REAR	ﾘﾔｰﾎｲｰﾙｱｯｾﾝ	2	[TSUR] INC.2-7
-	51233-80451		WHEEL-ASSY,REAR	ﾘﾔｰﾎｲｰﾙｱｯｾﾝ	2	[TUJR] INC.2-7
-	51236-80521		WHEEL-ASSY,REAR	ﾘﾔｰﾎｲｰﾙｱｯｾﾝ	2	[TUSR] INC.2-7
-	51236-80501		WHEEL-ASSY,REAR	ﾘﾔｰﾎｲｰﾙｱｯｾﾝ	2	[TUWR] INC.2-7
-	51236-80511		WHEEL-ASSY,REAR	ﾘﾔｰﾎｲｰﾙｱｯｾﾝ	2	[TUGR] INC.2-7
2	06807-50008		TIRE,SNOW,500-8	ﾀｲﾔ	2	[TSUR]
-	06802-50008		TIRE,UNIQUE,500-8	ﾀｲﾔ	2	A [TUJR/DUN]
-	06806-50008		TIRE,UNIQUE,500-8	ﾀｲﾔ	2	A [TUJR/AIC]
-	06806-50008		TIRE,UNIQUE,500-8	ﾀｲﾔ	2	B [TUJR/AIC]
-	06802-50008		TIRE,UNIQUE,500-8	ﾀｲﾔ	2	B [TUJR/DUN]
-	06851-50008		TIRE,SOFTONE,500-8	ﾀｲﾔ	2	[TUSR]
-	06841-50008		TIRE,WHITE,500-8	ﾀｲﾔ	2	[TUWR]
-	06843-50008		TIRE,GREEN,500-8	ﾀｲﾔ	2	[TUGR]
A2	52516-80302		RIM-ASSY,300D-8	ﾘﾑｱｯｾﾝ	2	[TSUR][TUJR][TUSR][TUWR] [TUGR] INC.3-7
3	NO PART NO.	#	RIM,OUTSIDE	ﾘﾑ	2	[TSUR][TUJR][TUSR][TUWR] [TUGR]
4	NO PART NO.	#	RIM,INSIDE	ﾘﾑ	2	[TSUR][TUJR][TUSR][TUWR] [TUGR]
5	514A3-82611		BOLT	ﾎﾞﾙﾄ	12	[TSUR][TUJR][TUSR][TUWR] [TUGR]
6	01400-10012		NUT	ﾅｯﾄ	12	[TSUR][TUJR][TUSR][TUWR] [TUGR]
7	02011-00012		WASHER	ﾜｯｼｬ	12	[TSUR][TUJR][TUSR][TUWR] [TUGR]

FIG.94 REAR WHEEL [TUJR/DR R]

(F7Z144P0) リヤーホイール

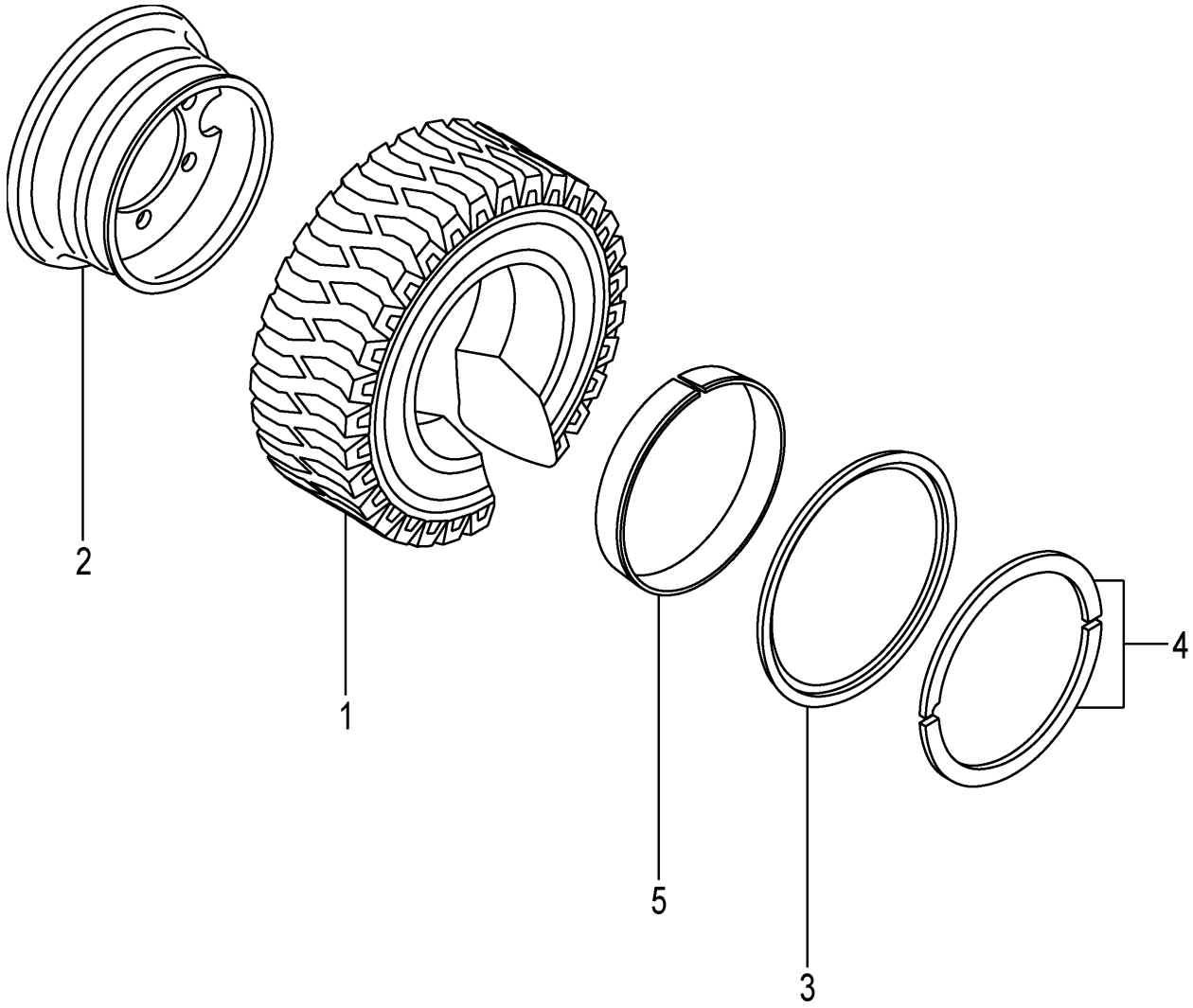

A:FHD15C3Z FHD15T3Z FHD18C3Z FHD18T3Z

Item No	Part No.	Mark	Description		Req'd	Remarks : Serial No.
A1	54236-81521		WHEEL-ASSY,REAR	ﾘﾔｰﾎｲｰﾙｱｯｾﾝ	2	[TUJR/DR R] INC.1-5
1	06805-50008		TIRE,UNIQUE,500-8	ﾀｲﾔ	2	[TUJR/DR R/DUN]
-	06806-50008		TIRE,UNIQUE,500-8	ﾀｲﾔ	2	[TUJR/DR R/AIC]
A2	54236-81601		RIM-ASSY,300D-8	ﾘﾑｱｯｾﾝ	2	[TUJR/DR R] INC.2-5
2	NO PART NO.	#	RIM	ﾘﾑ	2	[TUJR/DR R]
3	54236-83081		FLANGE,SIDE	ﾌﾗﾝｼﾞ	2	[TUJR/DR R]
4	54236-83091		RING,LOCK	ﾘﾝｸﾞ	2	[TUJR/DR R]
5	54236-83101		BAND	ﾊﾞﾝﾄﾞ	2	[TUJR/DR R]

FIG.95 REAR WHEEL [TRAR]

(F7Z144Q0) リヤーホイール

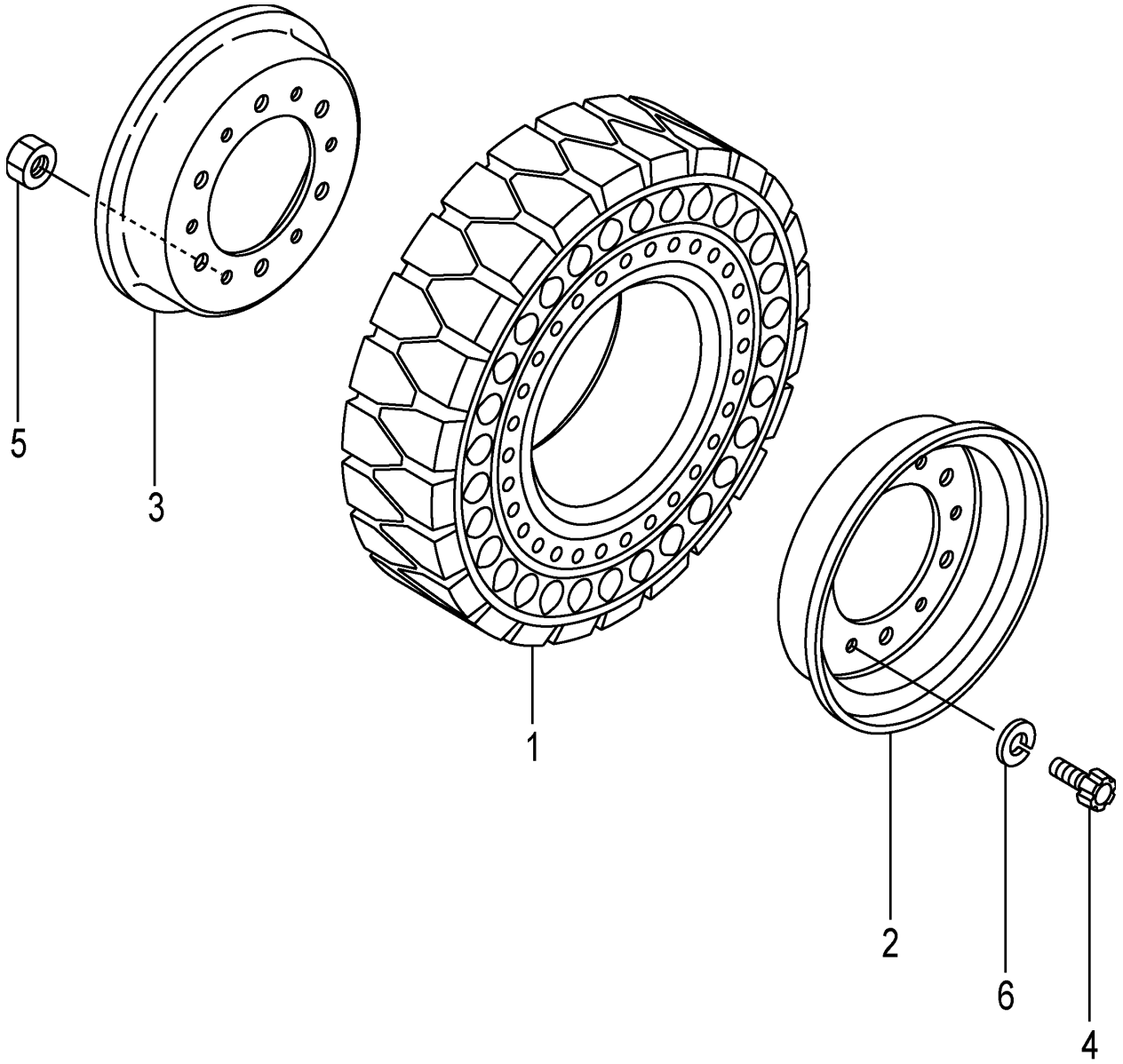

FIG.95

(F7Z144Q0)

A:FHD15C3Z FHD15T3Z FHD18C3Z FHD18T3Z

Item No	Part No.	Mark	Description		Req'd	Remarks : Serial No.
A1	516G6-80271		WHEEL-ASSY,REAR	ﾘﾔｰﾎｲｰﾙｱｯｾﾝ	2	[TRAR] INC.1-6
1	516G6-85001		TIRE,AIR-BOSS,500-8	ﾀｲﾔ	2	[TRAR]
A2	52516-80302		RIM-ASSY,300D-8	ﾘﾑｱｯｾﾝ	2	[TRAR] INC.2-6
2	NO PART NO.	#	RIM,OUTSIDE	ﾘﾑ	2	[TRAR]
3	NO PART NO.	#	RIM,INSIDE	ﾘﾑ	2	[TRAR]
4	514A3-82611		BOLT	ﾎﾞﾙﾄ	12	[TRAR]
5	01400-10012		NUT	ﾅｯﾄ	12	[TRAR]
6	02011-00012		WASHER	ﾜｯｼｬ	12	[TRAR]

FIG.96 POWER CYLINDER

(F7Z14510) ﾊﾟﾜｰｼﾘﾝﾀﾞ

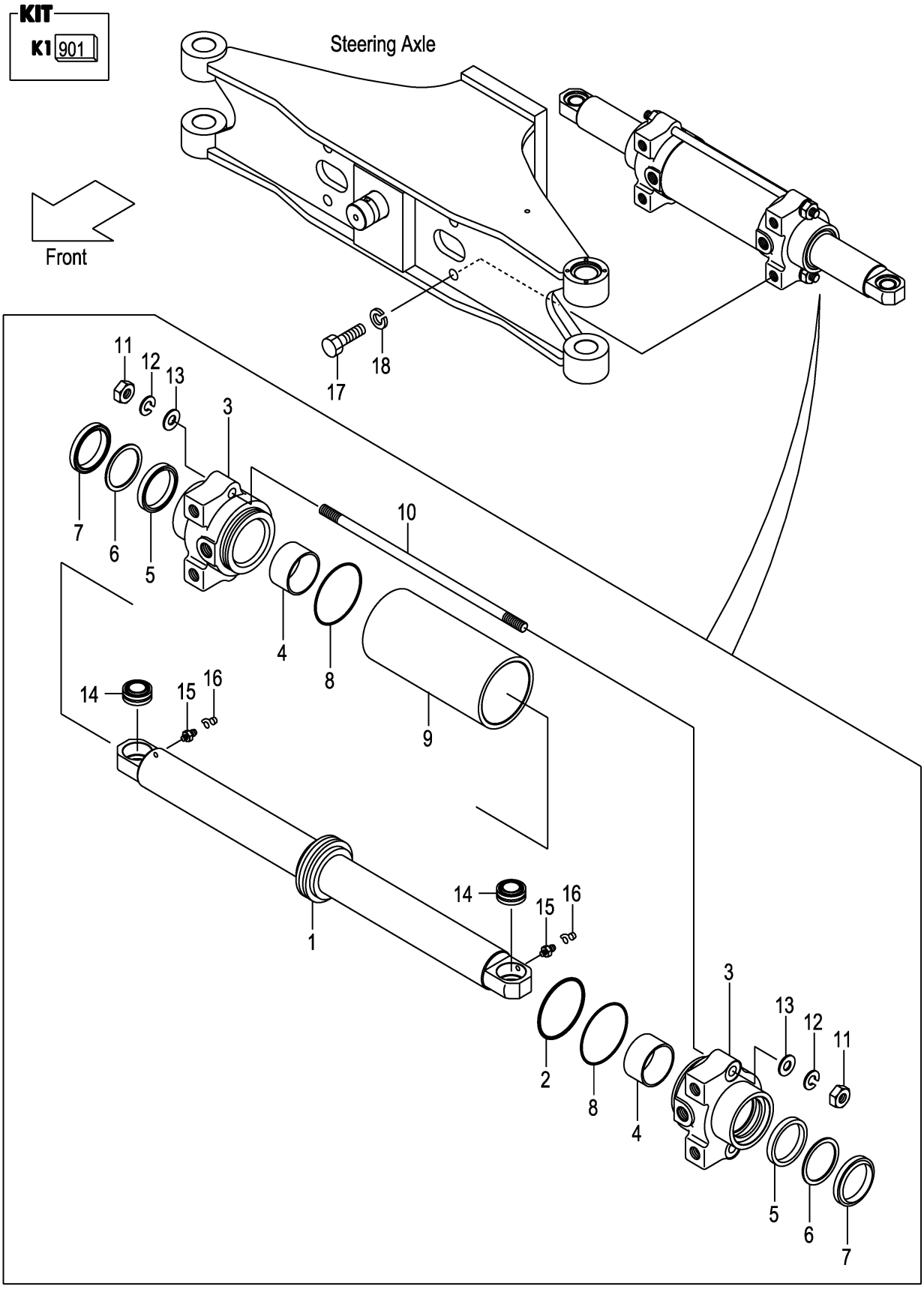

FIG.96

(F7Z14510)

A:FHD15C3Z FHD15T3Z FHD18C3Z FHD18T3Z

Item No	Part No.	Mark	Description		Req'd	Remarks : Serial No.
A1	20A74-50201		CYL-ASSY,PS	ﾊﾟﾜｽﾃｼﾘﾝﾀﾞｱｯｾﾝ	1	INC.1-16
901	20A74-59801	K1	KIT,OVERHAUL	ｵｰﾊﾞﾎｰﾙｷｯﾄ	1	INC.2,5-8
A2	20A74-50221		ROD-ASSY,PISTON	ﾋﾟｽﾄﾝﾛｯﾄﾞｱｯｾﾝ	1	INC.1,2
1	20A74-52001		ROD,PISTON	ﾛｯﾄﾞ	1	
2	25784-52342	*	SEAL	ｼｰﾙ	1	
3	20A74-52101		CAP,CYL	ｷｬｯﾌﾟ	2	
4	22198-42611		BUSHING,DU	ﾌﾞｯｼﾝｸﾞ	2	
5	20A74-52161	*	PACKING	ﾊﾟｯｷﾝｸﾞ	2	
6	23650-83531	*	RING,BACK-UP	ﾘﾝｸﾞ	2	
7	24320-56871	*	SEAL,DUST	ｼｰﾙ	2	
8	214A8-52221	*	O-RING	Oﾘﾝｸﾞ	2	
9	20A74-52201		BODY,CYL	ﾎﾞﾃﾞｨ	1	
10	22N54-52251		BOLT	ﾎﾞﾙﾄ	2	
11	01400-00012		NUT	ﾅｯﾄ	4	
12	02010-00012		WASHER	ﾜｯｼｬ	4	
13	02000-00012		WASHER	ﾜｯｼｬ	4	
14	510F2-42211		JOINT,SPHERE-FACE	ｼﾞｮｲﾝﾄ	2	
15	214A8-52051		NIPPLE,GREASE	ﾆｯﾌﾟﾙ	2	
16	22199-12401		CAP,NIPPLE	ｷｬｯﾌﾟ	2	
17	01100-16035		BOLT	ﾎﾞﾙﾄ	4	
18	02010-00016		WASHER	ﾜｯｼｬ	4	

FIG.97 POWER CYLINDER BOOT [PSB]

(F7Z14520) ﾊﾟﾜｰｼﾘﾝﾀﾞﾌﾞｰﾂ

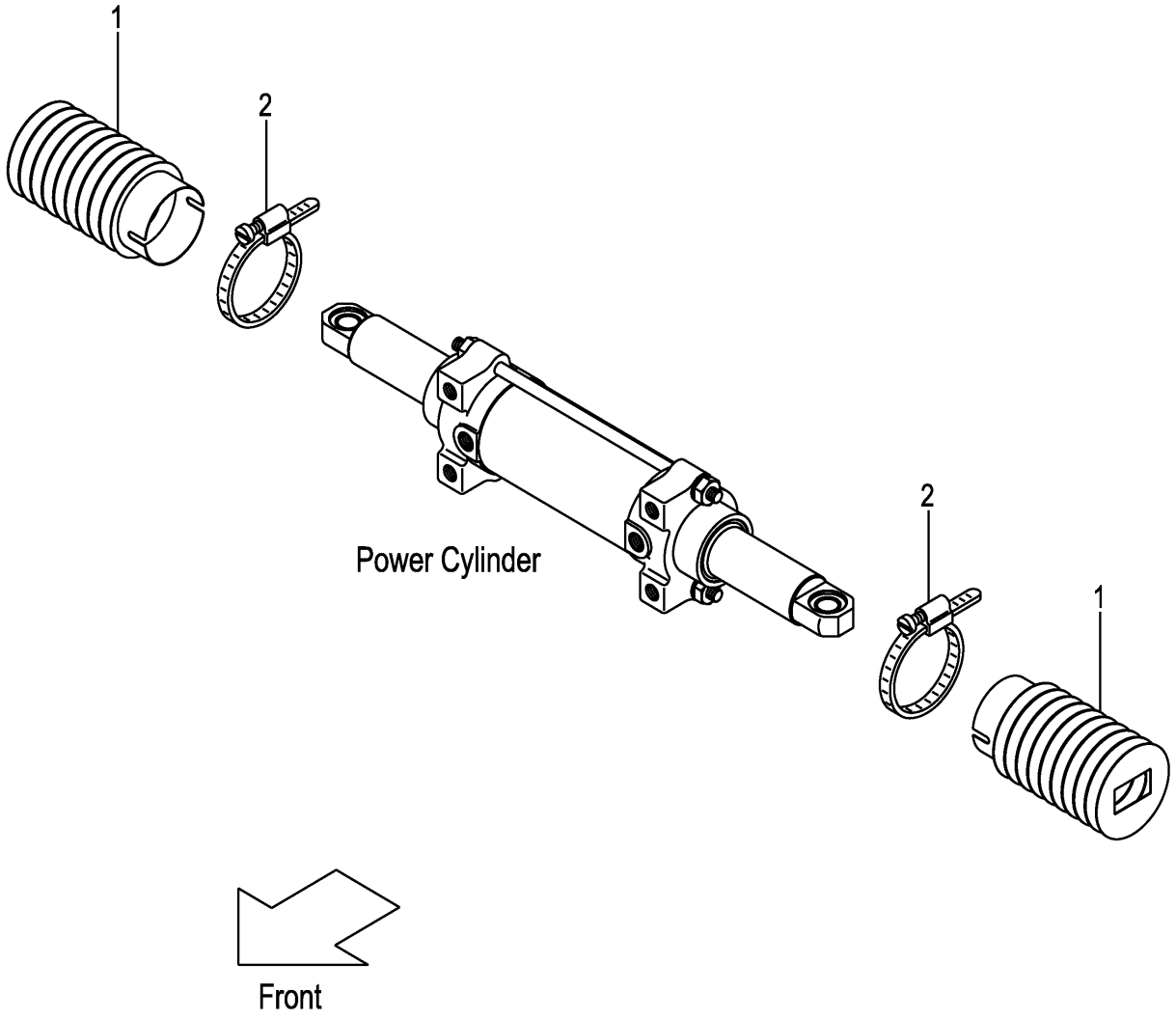

FIG.97

(F7Z14520)

A:FHD15C3Z FHD15T3Z FHD18C3Z FHD18T3Z

Item No	Part No.	Mark	Description	Req'd	Remarks : Serial No.
1	22B54-52301		BOOT,PS-CYL ﾌﾞｰﾂ	2	[PSB]
2	216G8-53031		BAND ﾊﾞﾝﾄﾞ	2	[PSB]

FIG.98 OVERHEAD GUARD

(F7Z15110) オーバ゛ヘッド゛カ゛ード゛

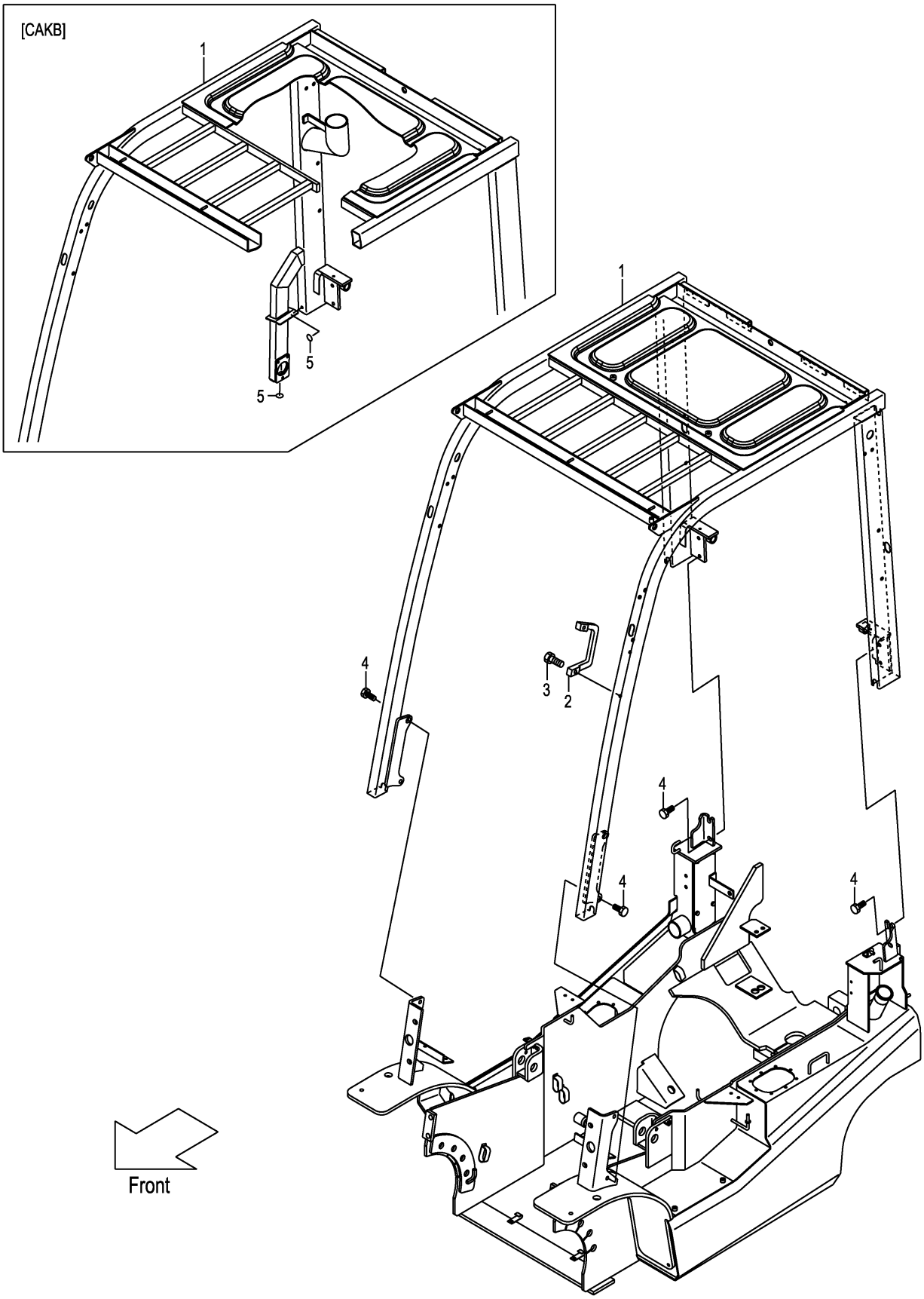

A:FHD15C3Z FHD15T3Z FHD18C3Z FHD18T3Z

Item No	Part No.	Mark	Description		Req'd	Remarks : Serial No.
1	20A75-10161		GUARD,HEAD	ｶﾞｰﾄﾞ	1	
-	50A70-90101		GUARD,HEAD	ｶﾞｰﾄﾞ	1	[CAKB]
-	50A75-00141		GUARD,HEAD	ｶﾞｰﾄﾞ	1	[HGL]
-	50A75-00101		GUARD,HEAD	ｶﾞｰﾄﾞ	1	[HGH060]
-	50A75-00111		GUARD,HEAD	ｶﾞｰﾄﾞ	1	[HGH100]
-	50A75-00121		GUARD,HEAD	ｶﾞｰﾄﾞ	1	[HGH150]
-	50A75-00131		GUARD,HEAD	ｶﾞｰﾄﾞ	1	[HGH200]
-	50A70-90401		GUARD,HEAD	ｶﾞｰﾄﾞ	1	[HGH060/CAKB]
2	516G5-13051		GRIP	ｸﾞﾘｯﾌﾟ	1	
3	01171-06025		BOLT	ﾎﾞﾙﾄ	2	
4	01186-12025		BOLT	ﾎﾞﾙﾄ	8	
5	22N55-13181		SEAL,PANEL-COVER	ｼｰﾙ	2	[CAKB]

FIG.99 OVERHEAD GUARD [HGD]

(F7Z15120) オーバ゛ヘッド゛カ゛ード゛

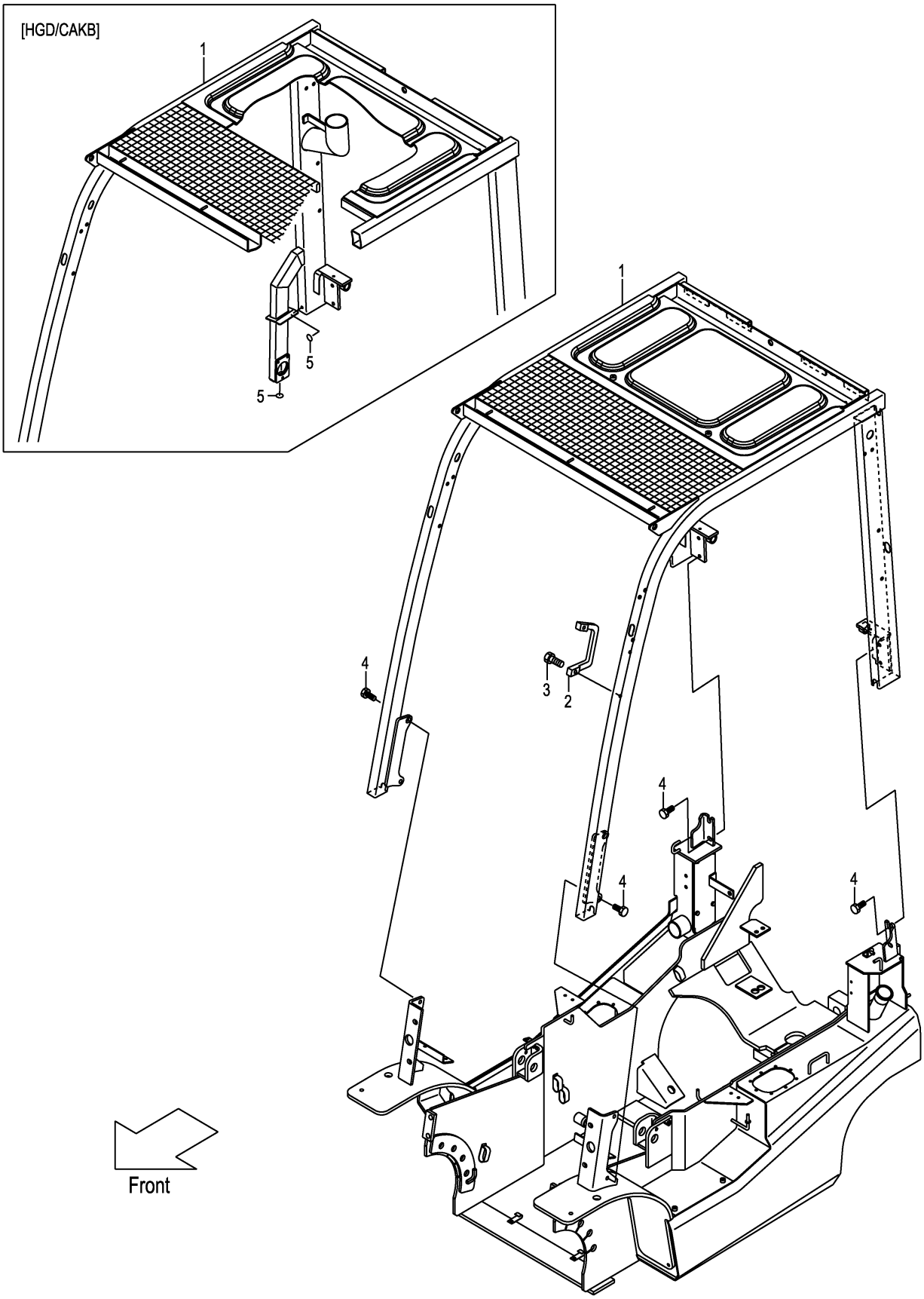

FIG.99

(F7Z15120)

A:FHD15C3Z FHD15T3Z FHD18C3Z FHD18T3Z

Item No	Part No.	Mark	Description		Req'd	Remarks : Serial No.
1	50A72-90201		GUARD,HEAD	ｶﾞｰﾄﾞ	1	[HGD]
-	50A72-90211		GUARD,HEAD	ｶﾞｰﾄﾞ	1	[HGD/CAKB]
-	50A72-90221		GUARD,HEAD	ｶﾞｰﾄﾞ	1	[HGD/HGH060]
-	50A72-90231		GUARD,HEAD	ｶﾞｰﾄﾞ	1	[HGD/HGH060/CAKB]
2	516G5-13051		GRIP	ｸﾞﾘｯﾌﾟ	1	[HGD]
3	01171-06025		BOLT	ﾎﾞﾙﾄ	2	[HGD]
4	01186-12025		BOLT	ﾎﾞﾙﾄ	8	[HGD]
5	22N55-13181		SEAL,PANEL-COVER	ｼｰﾙ	2	[HGD/CAKB]

FIG.100 FRONT LAMP BRACKET

(F7Z15130) フロントランプブラケット

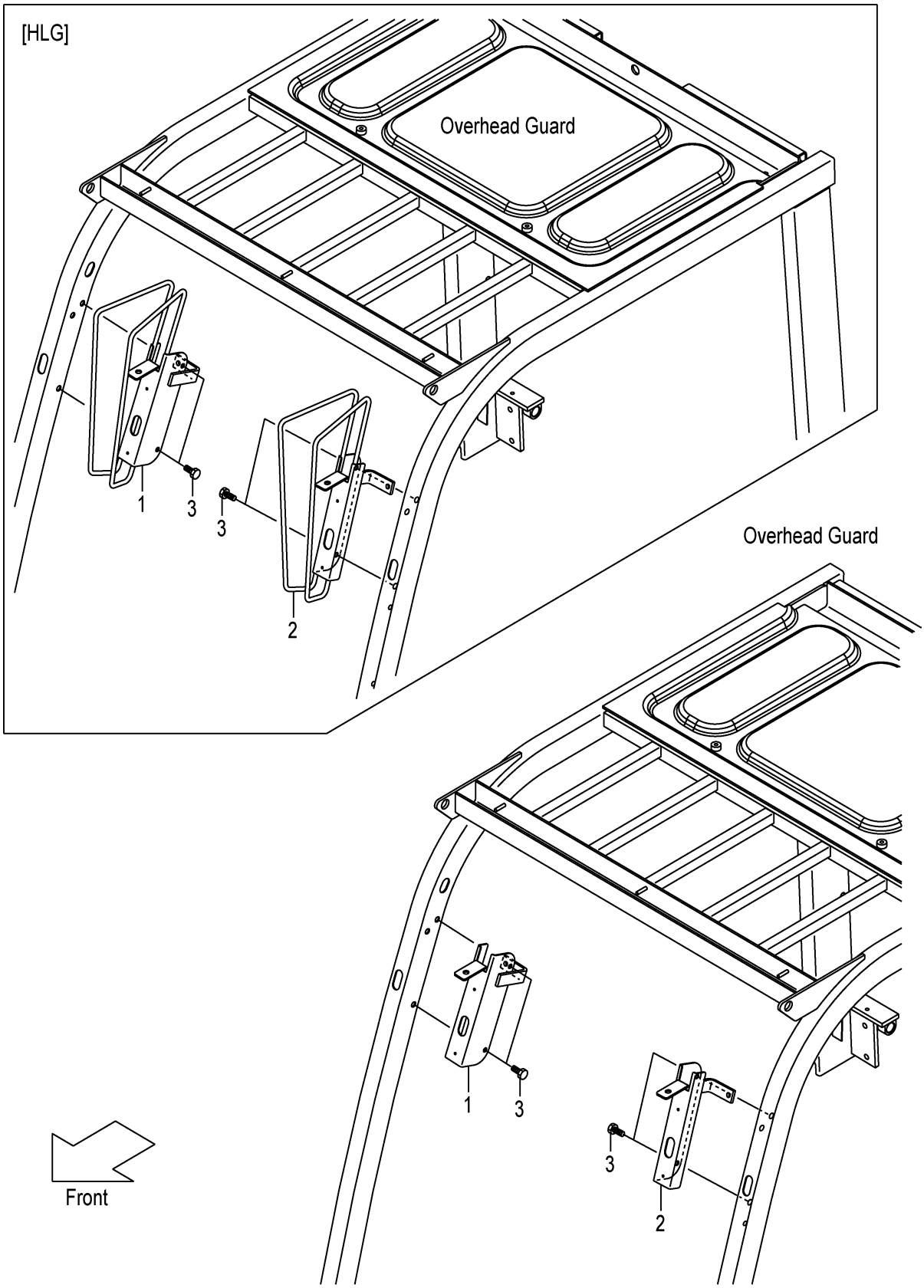

A:FHD15C3Z FHD15T3Z FHD18C3Z FHD18T3Z

Item No	Part No.	Mark	Description	Req'd	Remarks : Serial No.
1	22N55-12271		BRACKET,HEAD-LAMP,RH ﾌﾞﾗｹｯﾄ	1	
-	52N55-12101		BRACKET,HEAD-LAMP,RH ﾌﾞﾗｹｯﾄ	1	[HLG]
2	22N55-12281		BRACKET,HEAD-LAMP,LH ﾌﾞﾗｹｯﾄ	1	
-	52N55-12111		BRACKET,HEAD-LAMP,LH ﾌﾞﾗｹｯﾄ	1	[HLG]
3	514A5-12021		BOLT ﾎﾞﾙﾄ	4	

FIG.101 FRONT LAMP BRACKET [HL][BKH]

(F7Z15140) フロントランプブラケット

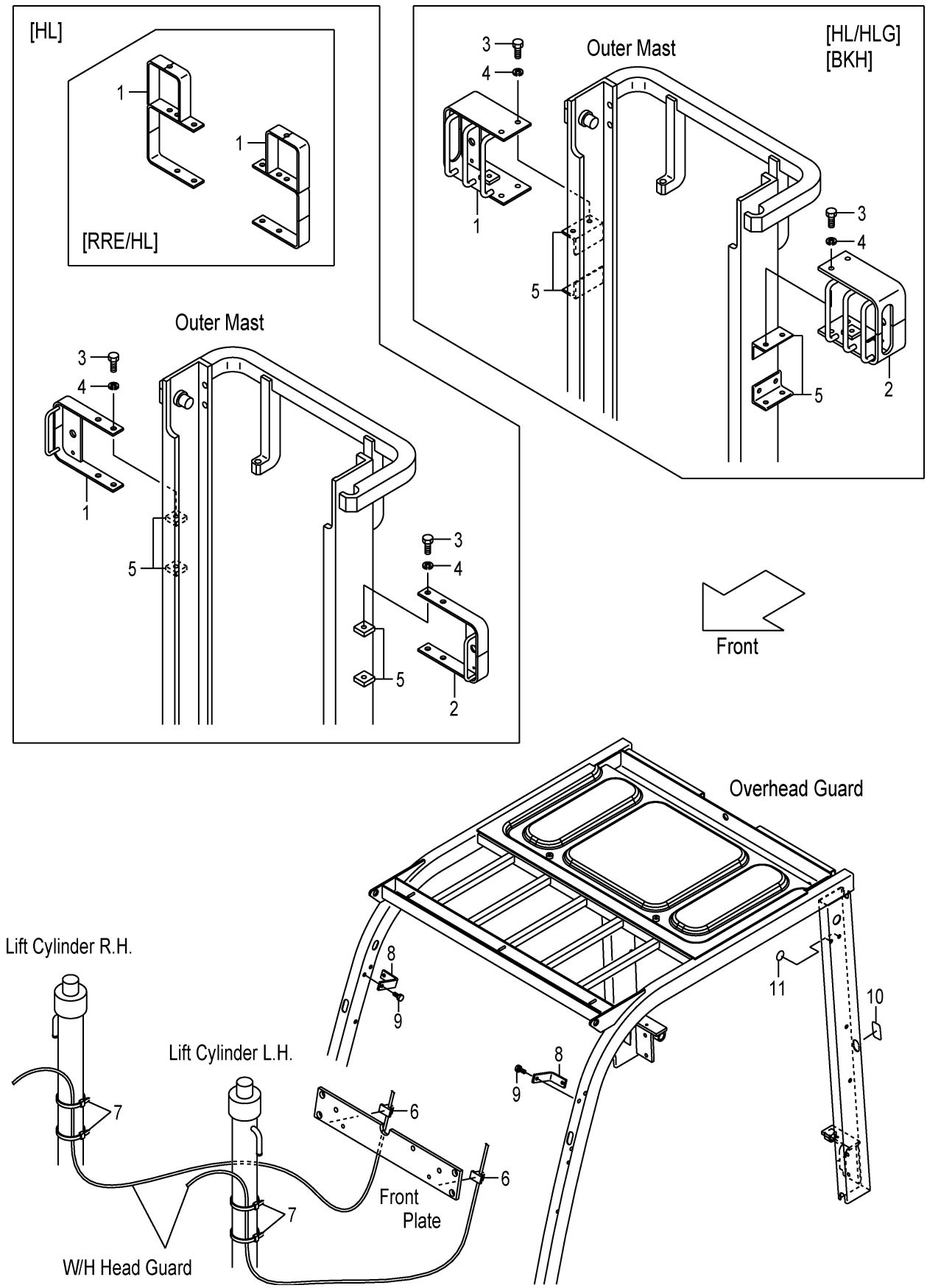

FIG.101

(F7Z15140)

A:FHD15C3Z FHD15T3Z FHD18C3Z FHD18T3Z

Item No	Part No.	Mark	Description	Req'd	Remarks : Serial No.
1	534A9-22001		BRACKET,HEAD-LAMP,RH ﾌﾞﾗｹｯﾄ	1	[HL]
-	534A4-22001		BRACKET,HEAD-LAMP,RH ﾌﾞﾗｹｯﾄ	1	[HL/HLG][BKH]
2	534A9-22011		BRACKET,HEAD-LAMP,LH ﾌﾞﾗｹｯﾄ	1	[HL](WITHOUT RRE/HL)
-	534A4-22011		BRACKET,HEAD-LAMP,LH ﾌﾞﾗｹｯﾄ	1	[HL/HLG][BKH]
3	01100-12020		BOLT ﾎﾞﾙﾄ	4	[HL][HL/HLG][BKH]
4	02010-00012		WASHER ﾜｯｼｬ	4	[HL][HL/HLG][BKH]
5	534A9-22101		BRACKET,HL ﾌﾞﾗｹｯﾄ	4	[HL]
-	534A4-22101		BRACKET,BKH ﾌﾞﾗｹｯﾄ	4	[HL/HLG][BKH]
6	27732-42221		CLAMP,HARNESS ｸﾗﾝﾌﾟ	2	[HL][HL/HLG][BKH]
7	04913-11380		BAND,INSHULOCK ﾊﾞﾝﾄﾞ	4	[HL][HL/HLG][BKH]
8	22N55-12571		BRACKET,BACK-MIRROR ﾌﾞﾗｹｯﾄ	2	[HL][HL/HLG][BKH]
9	514A5-12021		BOLT ﾎﾞﾙﾄ	2	[HL][HL/HLG][BKH]
10	22N55-13191		SEAL,HG ｼｰﾙ	2	[HL][HL/HLG][BKH]
11	22N55-13181		SEAL,COVER ｼｰﾙ	4	[HL][HL/HLG][BKH]

FIG.102 REAR LAMP COVER

(F7Z15150) ﾘﾔｰﾗﾝﾌﾟｶﾊﾞｰ

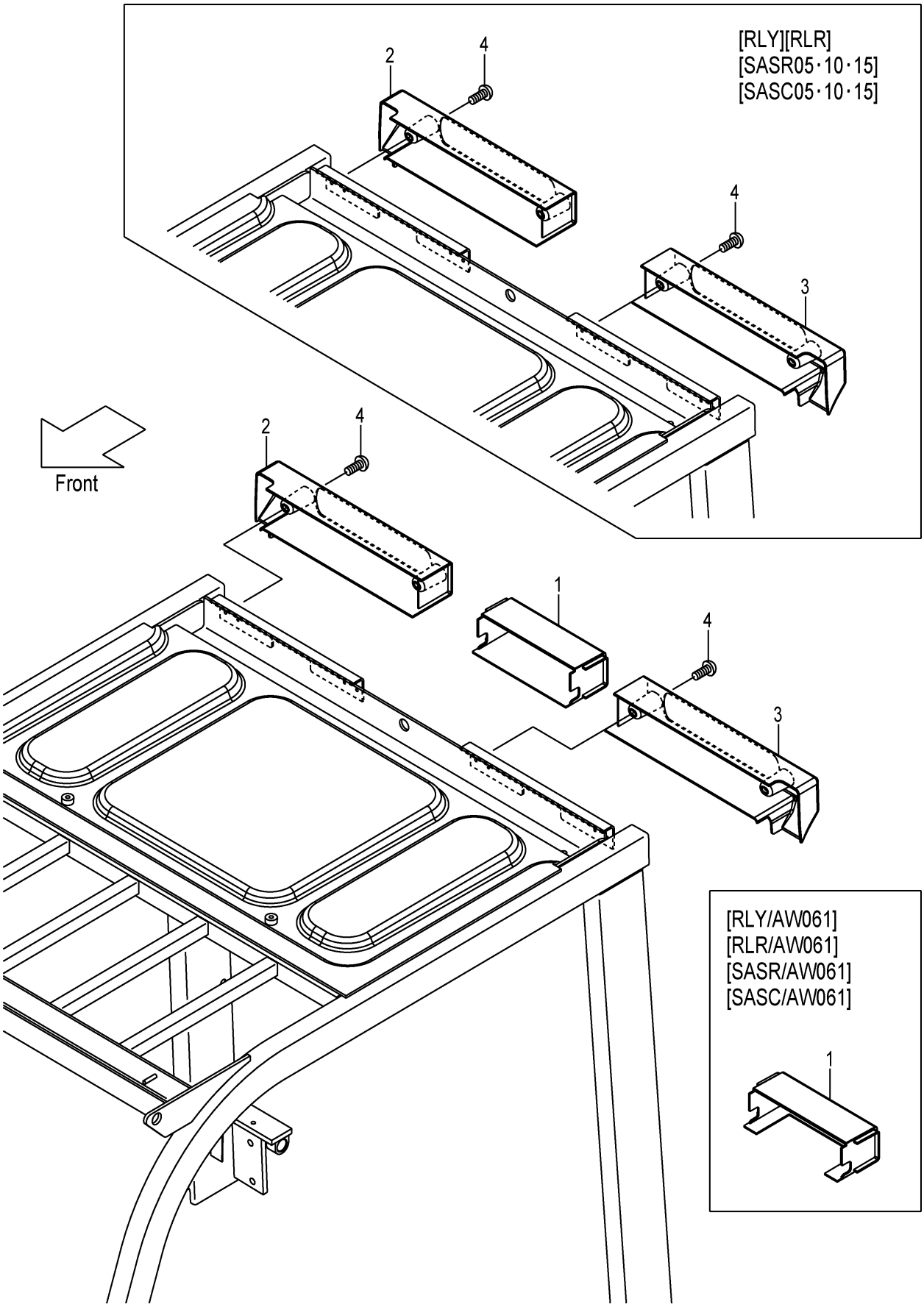

FIG.102

(F7Z15150)

A:FHD15C3Z FHD15T3Z FHD18C3Z FHD18T3Z

Item No	Part No.	Mark	Description	Req'd	Remarks : Serial No.
1	22N55-12701		COVER,REAR-LAMP ｶﾊﾞｰ	1	(WITHOUT RLY,RLR,SASR,SASC)
-	50A78-92001		COVER,REAR-LAMP ｶﾊﾞｰ	1	[RLY/AW061][RLR/AW061]
-	50A78-92001		COVER,REAR-LAMP ｶﾊﾞｰ	1	[SASR/AW061][SASC/AW061]
2	22N55-12711		COVER,REAR-LAMP,RH ｶﾊﾞｰ	1	
3	22N55-12721		COVER,REAR-LAMP,LH ｶﾊﾞｰ	1	
4	214A6-42252		SCREW ｽｸﾘｭ	4	

FIG.103 HEAD GUARD PARTS

(F7Z151A0) ﾍｯﾄﾞｶﾞｰﾄﾞﾊﾟｰﾂ

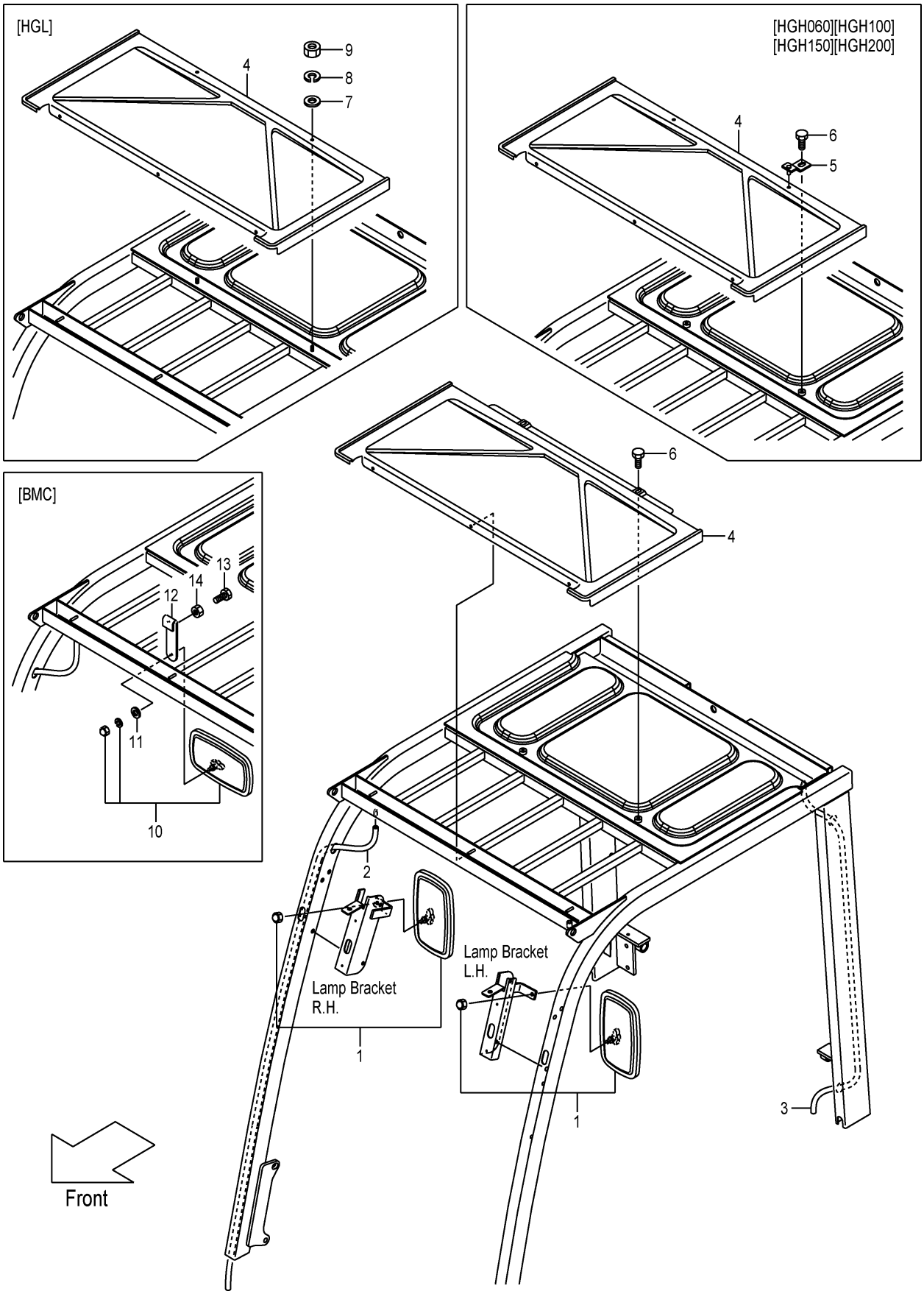

A:FHD15C3Z FHD15T3Z FHD18C3Z FHD18T3Z

Item No	Part No.	Mark	Description		Req'd	Remarks : Serial No.
1	239A9-92001		MIRROR	ﾐﾗｰ	2	
2	534A5-00401		HOSE,VINYL	ﾎｰｽ	1	
-	516M5-12301		HOSE,VINYL	ﾎｰｽ	1	[HGL]
-	534A5-00411		HOSE,VINYL	ﾎｰｽ	1	[HGH060][HGH100]
-	577H5-13051		HOSE,VINYL	ﾎｰｽ	1	[HGH150][HGH200]
3	516M5-12311		HOSE,VINYL	ﾎｰｽ	1	
-	534A5-00401		HOSE,VINYL	ﾎｰｽ	1	[HGL]
-	514A5-13471		HOSE,VINYL	ﾎｰｽ	1	[HGH060][HGH100]
-	571G5-02251		HOSE,VINYL	ﾎｰｽ	1	[HGH150][HGH200]
4	20A75-12901		CANVAS	ｷｬﾝﾊﾞｽ	1	
-	50A75-00501		CANVAS	ｷｬﾝﾊﾞｽ	1	[HGL][HGH060][HGH100][HGH150] [HGH200]
5	52N55-00551		BRACKET	ﾌﾞﾗｹｯﾄ	2	[HGH060][HGH100][HGH150] [HGH200]
6	01185-08016		BOLT	ﾎﾞﾙﾄ	2	(WITHOUT HGL)
7	02000-00006		WASHER	ﾜｯｼｬ	2	[HGL]
8	02010-00006		WASHER	ﾜｯｼｬ	2	[HGL]
9	01400-00006		NUT	ﾅｯﾄ	2	[HGL]
10	239A9-92001		MIRROR	ﾐﾗｰ	1	[BMC]
11	222A9-32011		WASHER	ﾜｯｼｬ	1	[BMC]
12	539A9-32001		BRACKET,BACK-MIRROR	ﾌﾞﾗｹｯﾄ	1	[BMC]
13	01100-08025		BOLT	ﾎﾞﾙﾄ	2	[BMC]
14	01402-00008		NUT	ﾅｯﾄ	2	[BMC]

FIG.104 POP RIVET

(F7Z151B0) ﾎﾟｯﾌﾟﾘﾍﾞｯﾄ

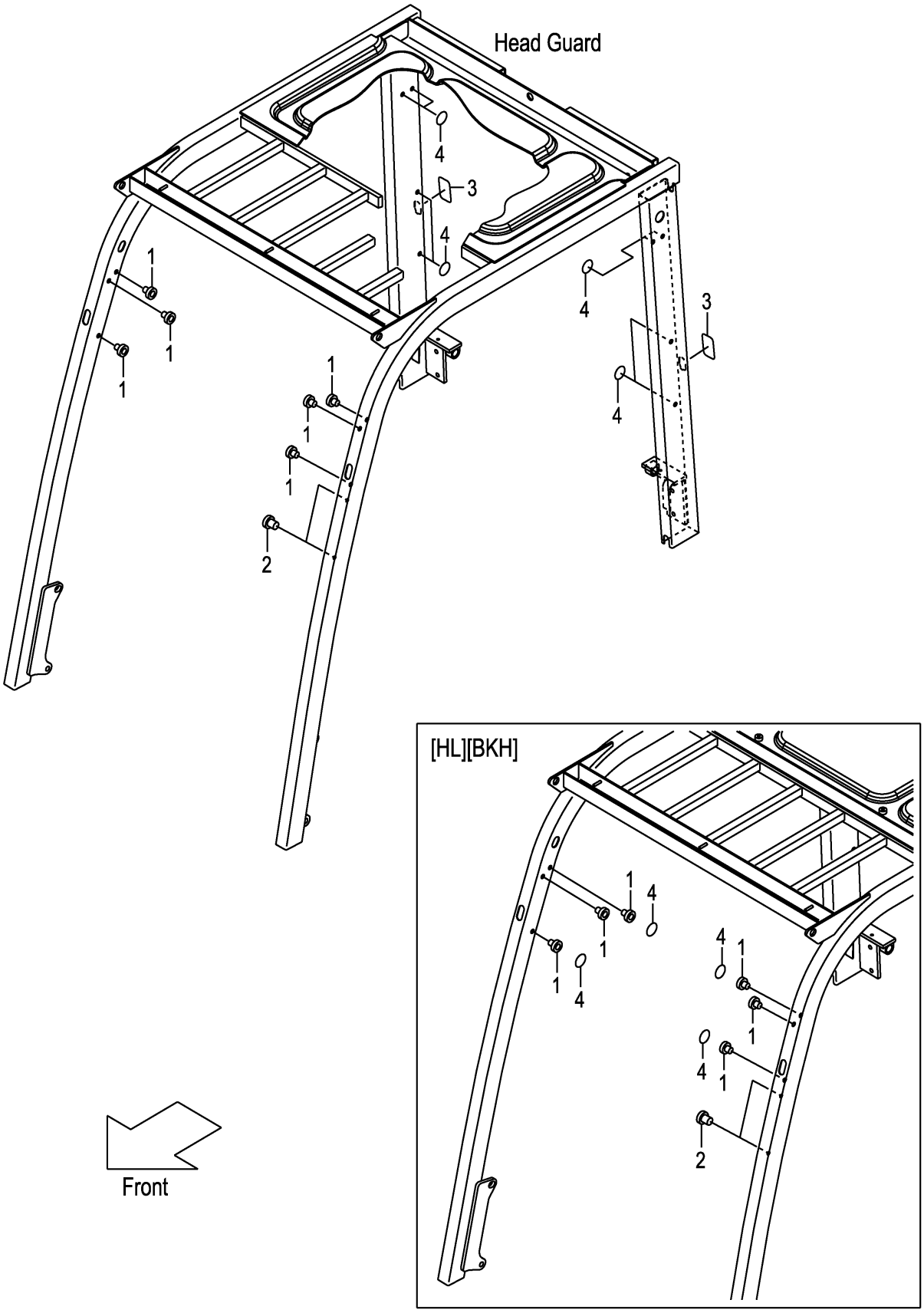

A:FHD15C3Z FHD15T3Z FHD18C3Z FHD18T3Z

Item No	Part No.	Mark	Description		Req'd	Remarks : Serial No.
1	514A5-12011		RIVET,POP	ﾘﾍﾞｯﾄ	6	
2	516G5-13151		RIVET,POP	ﾘﾍﾞｯﾄ	2	
3	22N55-13191		SEAT,HG	ｼｰﾄ	2	
4	22N55-13181		SEAL,PANEL-COVER	ｼｰﾙ	8	
-	22N55-13181		SEAL,PANEL-COVER	ｼｰﾙ	12	[HL][BKH]

FIG.105 POP RIVET [TUE][BBA][BBV][AW061][RWL][RRE][FE]

(F7Z151C0) ﾎﾟｯﾌﾟﾘﾍﾞｯﾄ

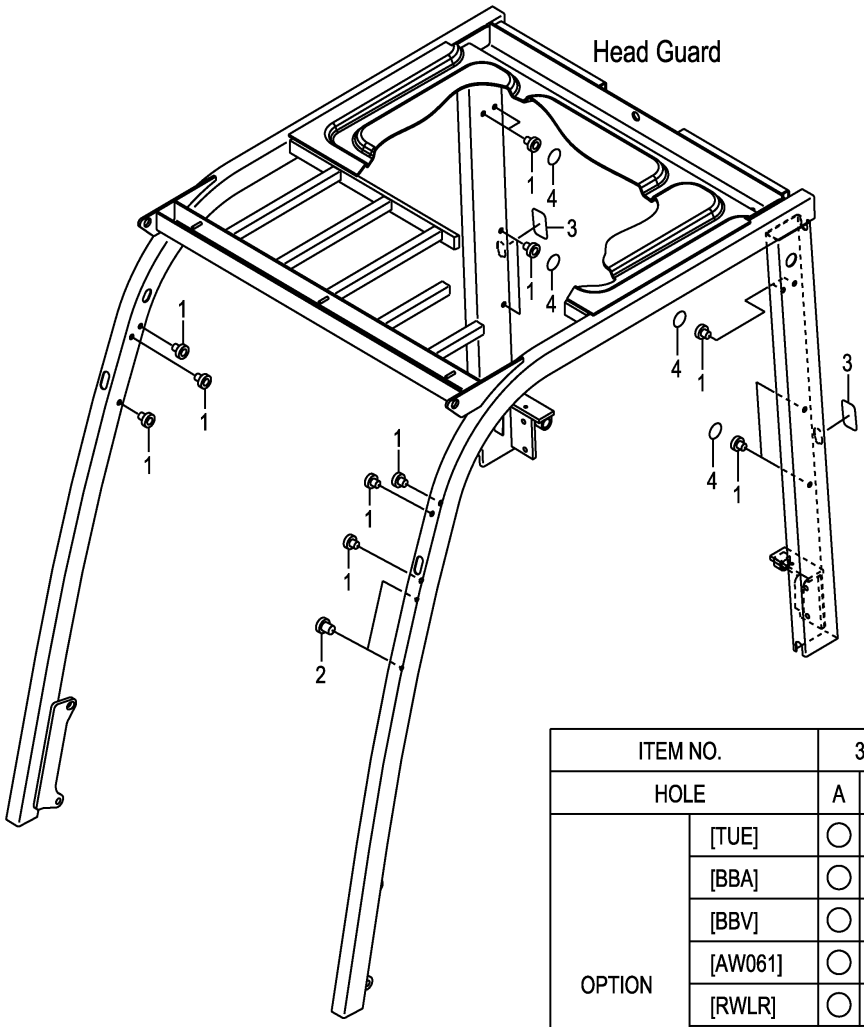

ITEM NO.		3		4							
HOLE		A	B	C	D	E	F	G	H	J	K
OPTION	[TUE]	○	○	○		○	○		○	○	○
	[BBA]	○	○	○	○	○	○	○	○		
	[BBV]	○	○	○	○	○	○	○	○		○
	[AW061]	○	○					○	○	○	○
	[RWLR]	○	○			○	○	○	○	○	○
	[RWLL]	○	○	○	○			○	○	○	○
	[RWL2]	○	○					○	○	○	○
	[FE]	○	○			○	○		○	○	○

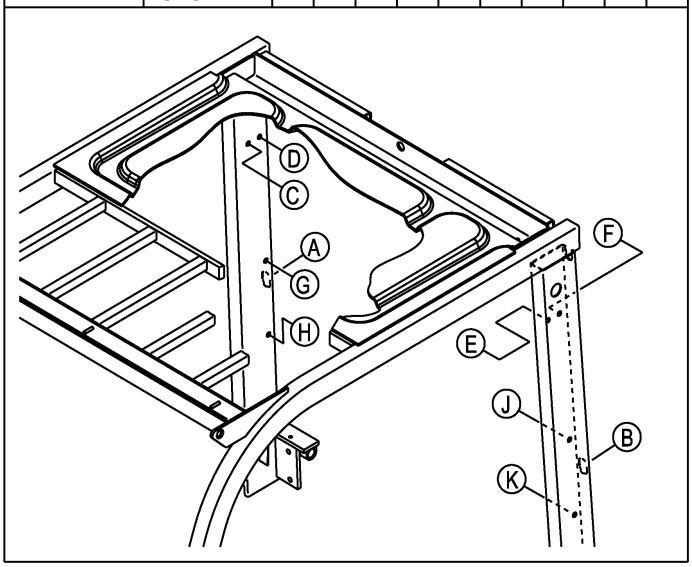

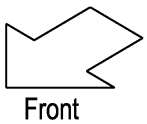

A:FHD15C3Z FHD15T3Z FHD18C3Z FHD18T3Z

Item No	Part No.	Mark	Description		Req'd	Remarks : Serial No.
1	514A5-12011		RIVET,POP	ﾘﾍﾞｯﾄ	14	[TUE][BBA][BBV][AW061][RWLR] [RWLL][RWL2][FE]
2	516G5-13151		RIVET,POP	ﾘﾍﾞｯﾄ	2	[TUE][BBA][BBV][AW061][RWLR] [RWLL][RWL2][FE]
3	22N55-13191		SEAT,HG	ｼｰﾄ	2	[TUE][BBA][BBV][AW061][RWLR] [RWLL][RWL2][FE]
4	22N55-13181		SEAL,PANEL-COVER	ｼｰﾙ	6	[TUE][BBA][RWLR][RWLL]
-	22N55-13181		SEAL,PANEL-COVER	ｼｰﾙ	7	[BBV]
-	22N55-13181		SEAL,PANEL-COVER	ｼｰﾙ	4	[AW061][RWL2]
-	22N55-13181		SEAL,PANEL-COVER	ｼｰﾙ	5	[FE]

FIG.106 ACCEL PEDAL

(F7Z15220) アクセルペダル

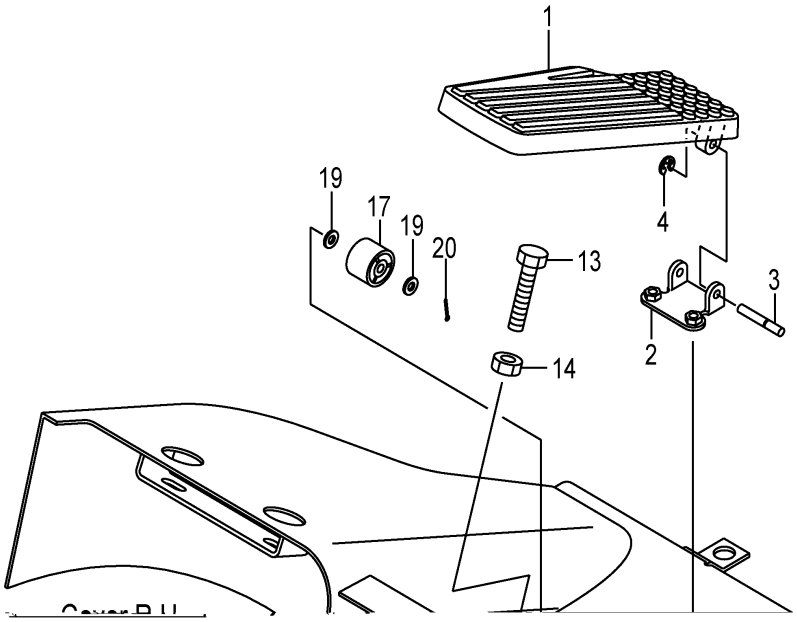

A:FHD15C3Z FHD15T3Z FHD18C3Z FHD18T3Z

Item No	Part No.	Mark	Description		Req'd	Remarks : Serial No.
A1	22N55-20211		PEDAL-ASSY,ACCEL	ｱｸｾﾙﾍﾟﾀﾞﾙｱｯｾﾝ	1	INC.1-4
1	NO PART NO.	#	PEDAL	ﾍﾟﾀﾞﾙ	1	
2	NO PART NO.	#	SUPPORT	ｻﾎﾟｰﾄ	1	
3	22N55-22121		SHAFT	ｼｬﾌﾄ	1	
4	22N55-22131		E-RING	Eﾘﾝｸﾞ	1	
5	01183-06012		BOLT	ﾎﾞﾙﾄ	2	
6	22U55-22102		CABLE,ACCEL	ｹｰﾌﾞﾙ	1	
7	02262-06015		PIN,CLEVIS	ﾋﾟﾝ	1	
8	02000-00006		WASHER	ﾜｯｼｬ	1	
9	02200-16015		PIN,COTTER	ﾋﾟﾝ	1	
10	22717-40061		PIN,CLEVIS	ﾋﾟﾝ	1	
11	02000-00005		WASHER	ﾜｯｼｬ	1	
12	02200-16015		PIN,COTTER	ﾋﾟﾝ	1	
13	01120-10040		BOLT	ﾎﾞﾙﾄ	1	
14	01400-00010		NUT	ﾅｯﾄ	1	
15	20A75-22001		BRACKET,ACCEL-LINK	ﾌﾞﾗｹｯﾄ	1	
16	01185-08016		BOLT	ﾎﾞﾙﾄ	2	
A2	20A75-20201		LINK-ASSY,ACCEL	ｱｸｾﾙﾘﾝｸｱｯｾﾝ	1	INC.17-21
17	214A5-22001		ROLLER	ﾛｰﾗ	1	
18	256C1-12111		BUSHING	ﾌﾞｯｼﾝｸﾞ	1	
19	02000-00006		WASHER	ﾜｯｼｬ	2	
20	02200-16010		PIN,COTTER	ﾋﾟﾝ	1	
21	NO PART NO.	#	LINK,ACCEL	ﾘﾝｸ	1	
22	22N55-22031		SPRING	ｽﾌﾟﾘﾝｸﾞ	1	
23	02000-00012		WASHER	ﾜｯｼｬ	2	
24	02200-03020		PIN,COTTER	ﾋﾟﾝ	1	

FIG.107 FOOT PEDAL (CLUTCH)

(F7Z15410) ﾌｯﾄﾍﾟﾀﾞﾙ

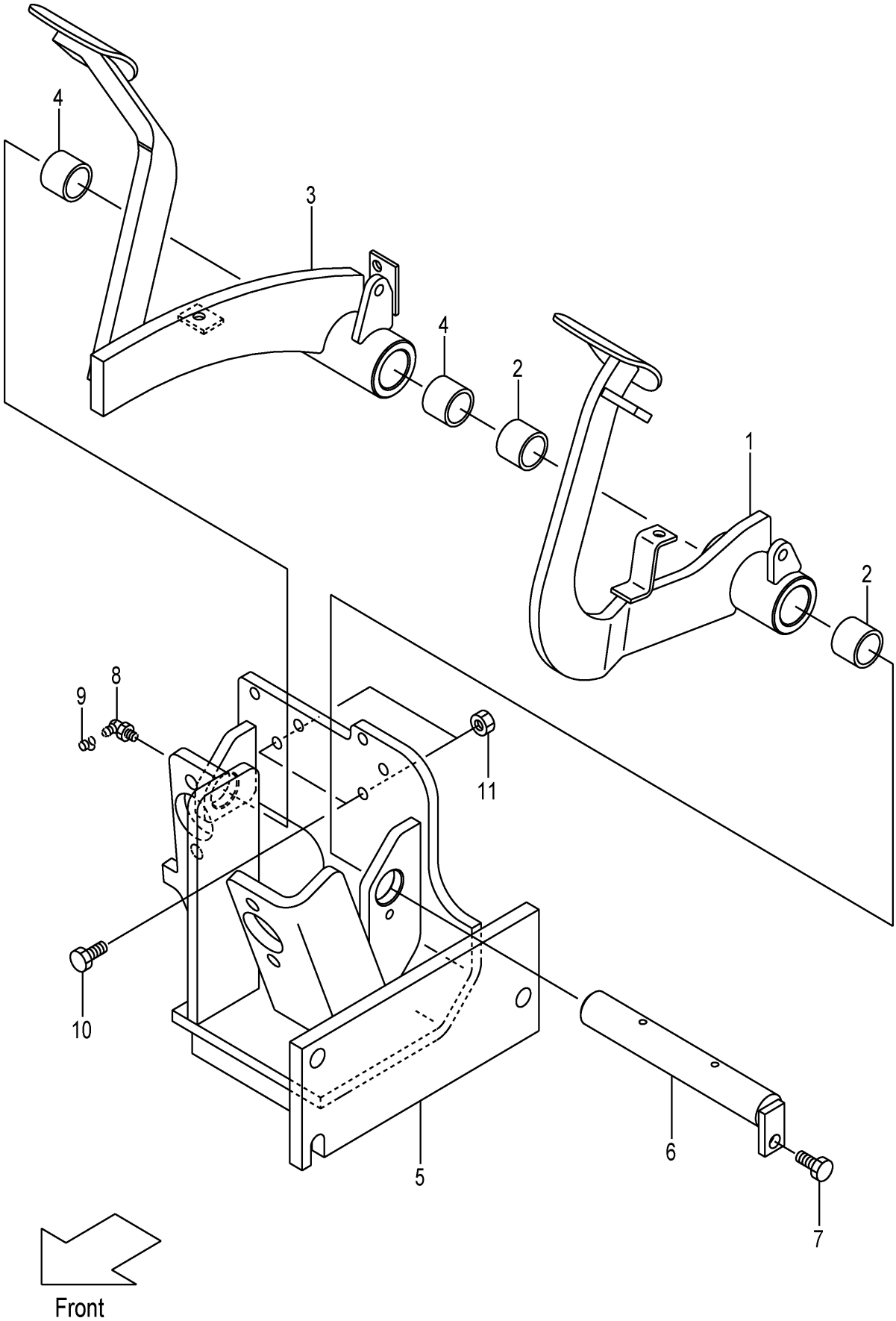

A:FHD15C3Z FHD18C3Z

Item No	Part No.	Mark	Description		Req'd	Remarks : Serial No.
A1	22N45-30304		PEDAL-ASSY,CLUTCH	ｸﾗｯﾁﾍﾟﾀﾞﾙｱｯｾﾝ	1	INC.1,2
1	NO PART NO.	#	PEDAL,CLUTCH	ﾍﾟﾀﾞﾙ	1	
2	23655-42421		BUSHING,PEDAL	ﾌﾞｯｼﾝｸﾞ	2	
A2	22N45-40303		PEDAL-ASSY,BRAKE	ﾌﾞﾚｰｷﾍﾟﾀﾞﾙｱｯｾﾝ	1	INC.3,4
3	NO PART NO.	#	PEDAL,BRAKE	ﾍﾟﾀﾞﾙ	1	
4	23655-42421		BUSHING,PEDAL	ﾌﾞｯｼﾝｸﾞ	2	
5	20A65-40202		BRACKET,PEDAL	ﾌﾞﾗｹｯﾄ	1	
6	22N45-42101		SHAFT,PEDAL	ｼｬﾌﾄ	1	
7	01183-08016		BOLT	ﾎﾞﾙﾄ	1	
8	04901-00190		FITTING	ﾌｨｯﾃｨﾝｸﾞ	1	
9	22199-12401		CAP,NIPPLE	ｷｬｯﾌﾟ	1	
10	01100-10025		BOLT	ﾎﾞﾙﾄ	2	
11	01402-00010		NUT	ﾅｯﾄ	2	

FIG.108 FOOT PEDAL (TOR-CON)

(F7Z15420) ﾌｯﾄﾍﾟﾀﾞﾙ

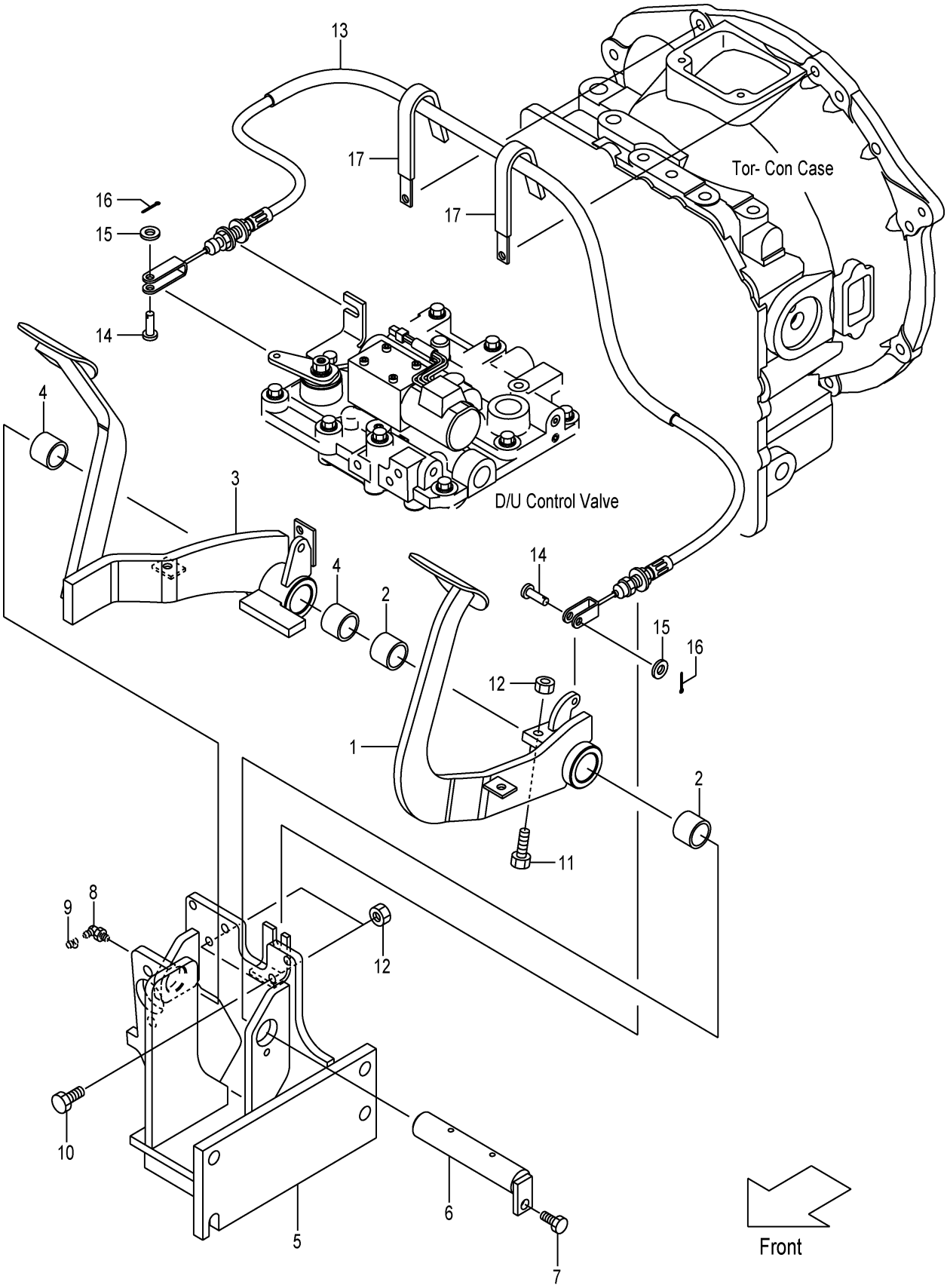

A:FHD15T3Z FHD18T3Z

Item No	Part No.	Mark	Description		Req'd	Remarks : Serial No.
A1	22N55-40403		PEDAL-ASSY,INCHING	ｲﾝﾁﾝｸﾞﾍﾟﾀﾞﾙｱｯｾﾝ	1	INC.1,2
1	NO PART NO.	#	PEDAL,INCHING	ﾍﾟﾀﾞﾙ	1	
2	23655-42421		BUSHING,PEDAL	ﾌﾞｯｼﾝｸﾞ	2	
A2	22N55-40303		PEDAL-ASSY,BRAKE	ﾌﾞﾚｰｷﾍﾟﾀﾞﾙｱｯｾﾝ	1	INC.3,4
3	NO PART NO.	#	PEDAL,BRAKE	ﾍﾟﾀﾞﾙ	1	
4	23655-42421		BUSHING,PEDAL	ﾌﾞｯｼﾝｸﾞ	2	
5	20A75-40202		BRACKET,PEDAL	ﾌﾞﾗｹｯﾄ	1	
6	22N55-42101		SHAFT,PEDAL	ｼｬﾌﾄ	1	
7	01183-08016		BOLT	ﾎﾞﾙﾄ	1	
8	04901-00190		FITTING	ﾌｨｯﾃｨﾝｸﾞ	1	
9	22199-12401		CAP,NIPPLE	ｷｬｯﾌﾟ	1	
10	01100-10025		BOLT	ﾎﾞﾙﾄ	2	
11	01120-10040		BOLT	ﾎﾞﾙﾄ	1	
12	01402-00010		NUT	ﾅｯﾄ	3	
13	22N55-42601		CABLE,INCHING	ｹｰﾌﾞﾙ	1	
14	02262-06020		PIN,CLEVIS	ﾋﾟﾝ	2	
15	02000-00006		WASHER	ﾜｯｼｬ	2	
16	02200-16015		PIN,COTTER	ﾋﾟﾝ	2	
17	22N55-42191		CLIP	ｸﾘｯﾌﾟ	2	

FIG.109 FOOT PEDAL CYLINDER (CLUTCH)

(F7Z15440) ﾌｯﾄﾍﾟﾀﾞﾙｼﾘﾝﾀﾞ

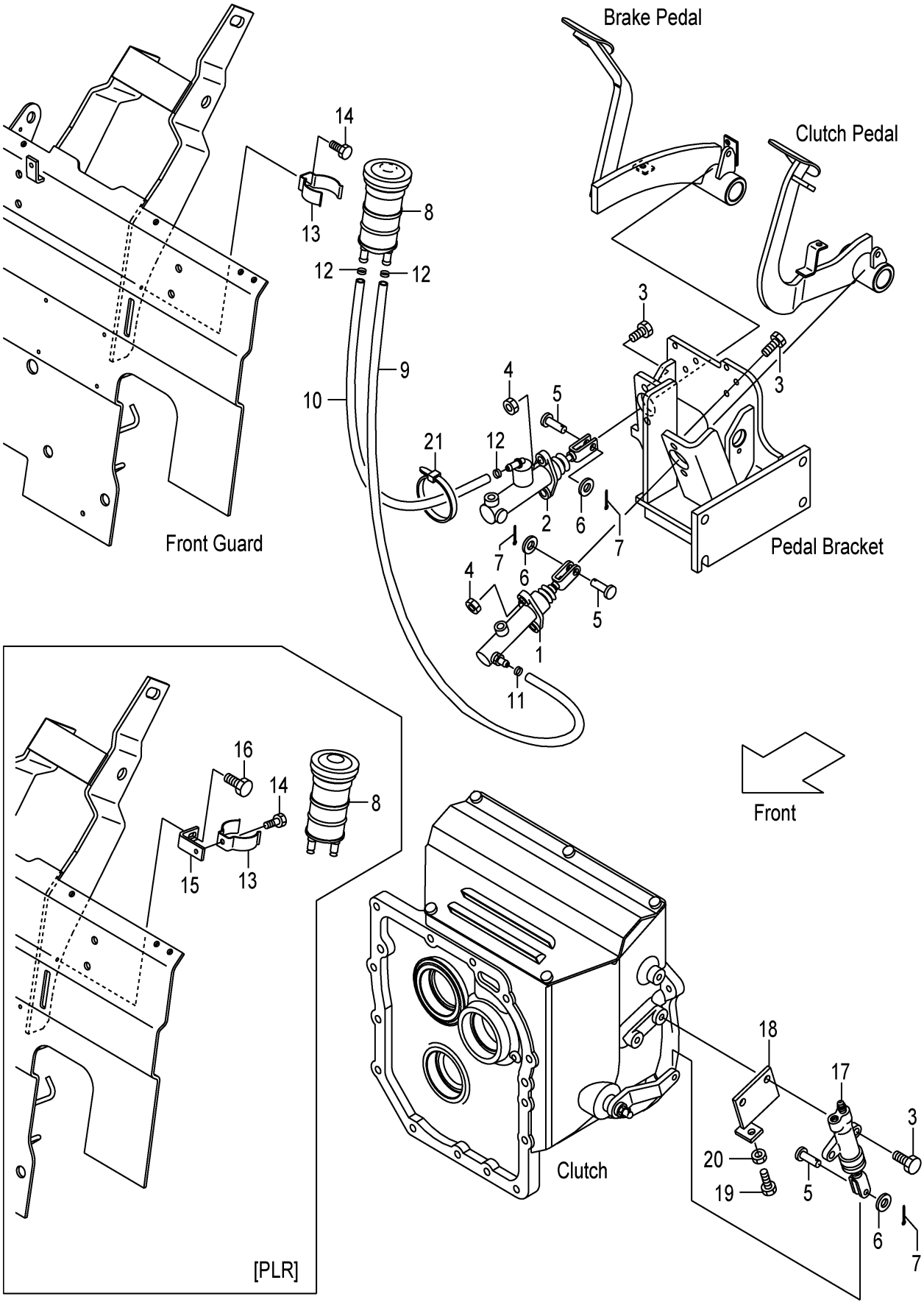

A:FHD15C3Z FHD18C3Z

Item No	Part No.	Mark	Description		Req'd	Remarks : Serial No.
1	239A5-40501		CYL,CLUTCH-MASTER	ｼﾘﾝﾀﾞ	1	SEE FIG.114
2	27045-40302		CYL,BRAKE-MASTER	ｼﾘﾝﾀﾞ	1	SEE FIG.115
3	01184-10030		BOLT	ﾎﾞﾙﾄ	6	
4	01400-00010		NUT	ﾅｯﾄ	4	
5	02262-08025		PIN,CLEVIS	ﾋﾟﾝ	3	
6	02000-00008		WASHER	ﾜｯｼｬ	3	
7	02200-02020		PIN,COTTER	ﾋﾟﾝ	3	
8	216G5-42011		TANK,RESERVE	ﾀﾝｸ	1	
9	22N45-32151		HOSE,RESERVE	ﾎｰｽ	1	
10	22N45-32161		HOSE,RESERVE	ﾎｰｽ	1	
11	25595-42491		BAND,HOSE	ﾊﾞﾝﾄﾞ	1	
12	25785-43091		BAND,HOSE	ﾊﾞﾝﾄﾞ	3	
13	224G5-42061		CLIP,RESERVE-TANK	ｸﾘｯﾌﾟ	1	
14	01183-06010		BOLT	ﾎﾞﾙﾄ	1	
15	52N52-C3981		BRACKET	ﾌﾞﾗｹｯﾄ	1	[PLR]
16	01185-06012		BOLT	ﾎﾞﾙﾄ	1	[PLR]
17	214A5-32312		CYL,CLUTCH-RELEASE	ｼﾘﾝﾀﾞ	1	SEE FIG.116
18	22N45-32201		BRACKET,RELEASE-CYL	ﾌﾞﾗｹｯﾄ	1	
19	01100-10025		BOLT	ﾎﾞﾙﾄ	1	
20	01402-00010		NUT	ﾅｯﾄ	1	
21	04913-11100		BAND	ﾊﾞﾝﾄﾞ	1	

FIG.110 FOOT PEDAL CYLINDER (TOR-CON)

(F7Z15450) ﾌｯﾄﾍﾟﾀﾞﾙｼﾘﾝﾀﾞ

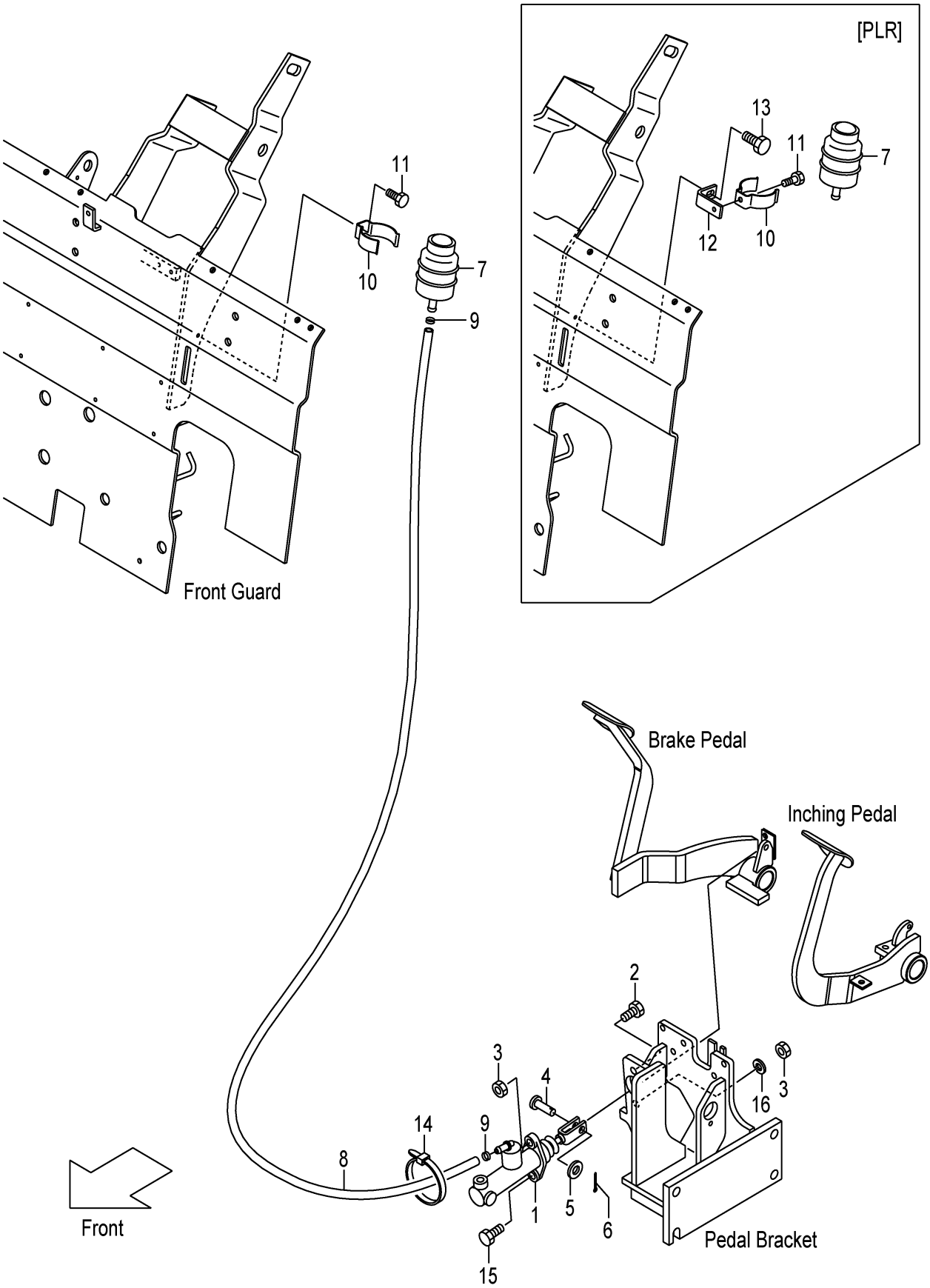

A:FHD15T3Z FHD18T3Z

Item No	Part No.	Mark	Description		Req'd	Remarks : Serial No.
1	27045-40302		CYL,BRAKE-MASTER	ｼﾘﾝﾀﾞ	1	SEE FIG.115
2	01184-10030		BOLT	ﾎﾞﾙﾄ	1	
3	01400-00010		NUT	ﾅｯﾄ	2	
4	02262-08025		PIN,CLEVIS	ﾋﾟﾝ	1	
5	02000-00008		WASHER	ﾜｯｼｬ	1	
6	02200-02020		PIN,COTTER	ﾋﾟﾝ	1	
7	23775-42101		TANK,RESERVE	ﾀﾝｸ	1	
8	271A5-42301		HOSE,RESERVE	ﾎｰｽ	1	
9	25595-42491		BAND,HOSE	ﾊﾞﾝﾄﾞ	2	
10	224G5-42061		CLIP,RESERVE-TANK	ｸﾘｯﾌﾟ	1	
11	01183-06010		BOLT	ﾎﾞﾙﾄ	1	
12	52N52-C3981		BRACKET	ﾌﾞﾗｹｯﾄ	1	[PLR]
13	01185-06012		BOLT	ﾎﾞﾙﾄ	1	[PLR]
14	04913-11100		BAND	ﾊﾞﾝﾄﾞ	1	
15	01100-10030		BOLT	ﾎﾞﾙﾄ	1	
16	02010-00010		WASHER	ﾜｯｼｬ	1	

FIG.111 BRAKE PIPE (CLUTCH)

(F7Z15490) ﾌﾞﾚｰｷﾊﾟｲﾌﾟ

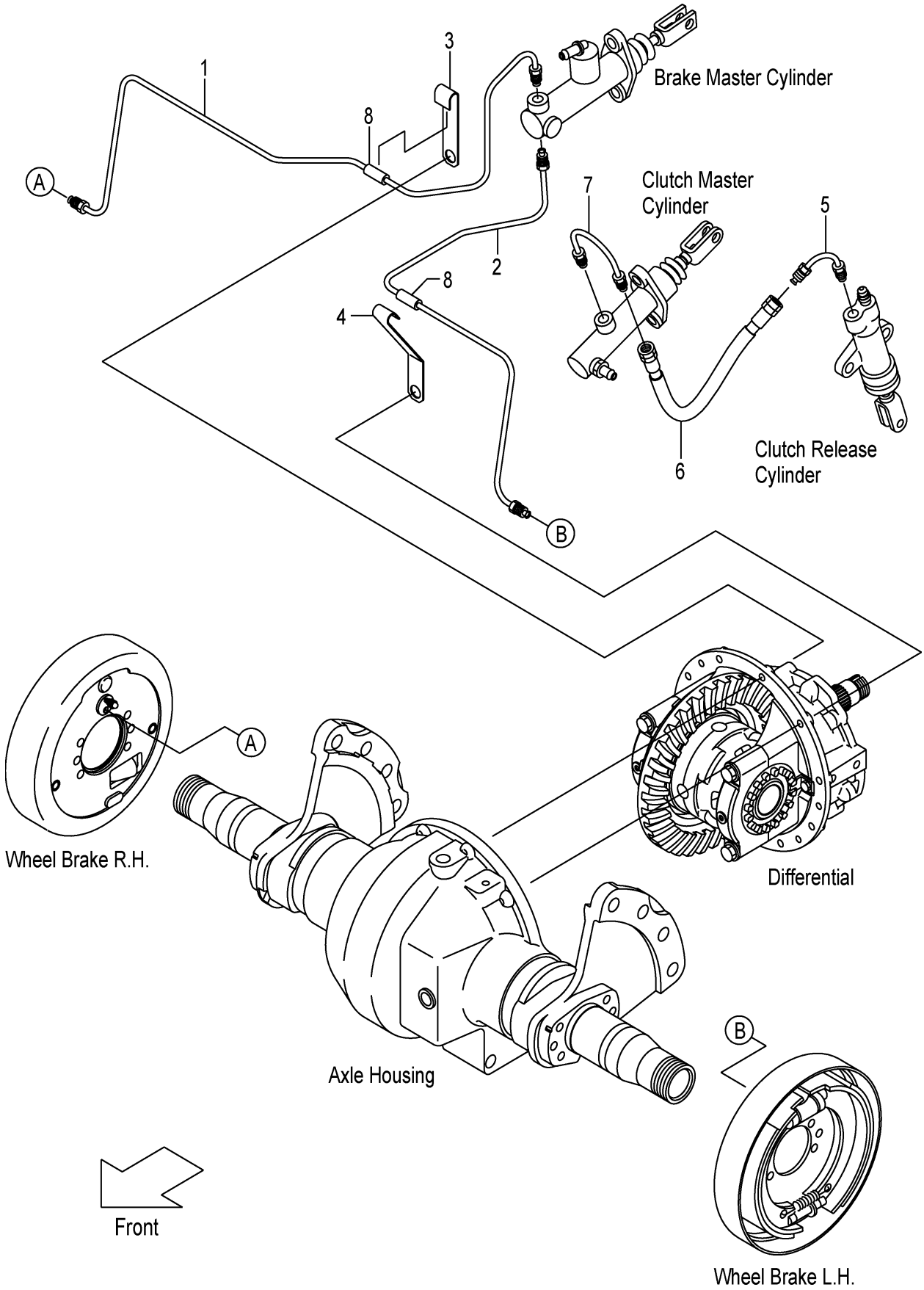

A:FHD15C3Z FHD18C3Z

Item No	Part No.	Mark	Description		Req'd	Remarks : Serial No.
1	20A65-42201		PIPE,BRAKE,RH	ﾊﾟｲﾌﾟ	1	INC.8
2	20A65-42301		PIPE,BRAKE,LH	ﾊﾟｲﾌﾟ	1	INC.8
3	20A75-42101		CLIP,PIPE	ｸﾘｯﾌﾟ	1	
4	20A75-42111		CLIP,PIPE	ｸﾘｯﾌﾟ	1	
5	239A5-42471		PIPE,CLUTCH-MASTER	ﾊﾟｲﾌﾟ	1	
6	22N45-32131		HOSE,BRAKE	ﾎｰｽ	1	
7	22N45-32101		PIPE,MASTER-CYL	ﾊﾟｲﾌﾟ	1	
8	23445-40431		RUBBER	ﾗﾊﾞｰ	2	

FIG.112 BRAKE PIPE (TOR-CON)

(F7Z154A0) ﾌﾞﾚｰｷﾊﾟｲﾌﾟ

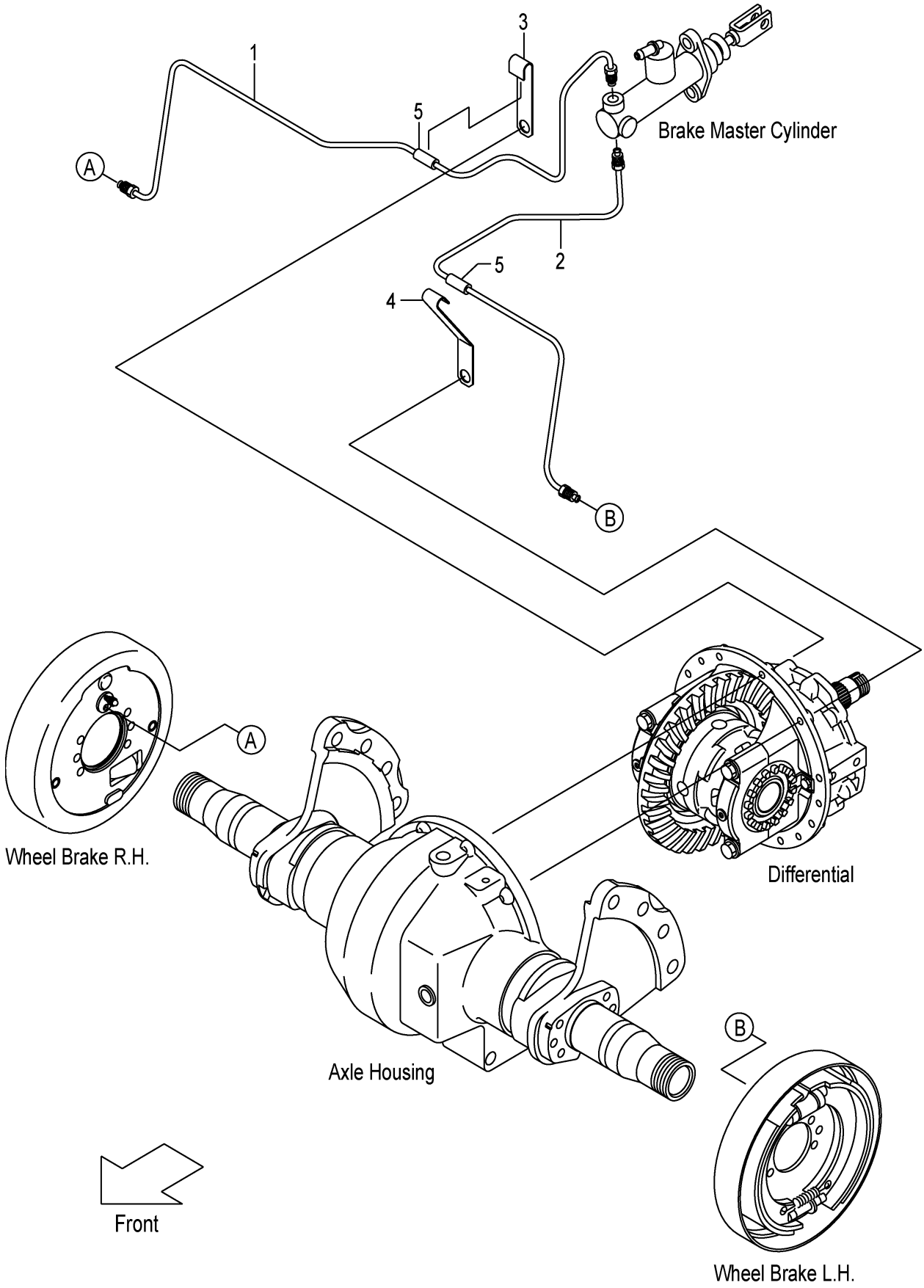

A:FHD15T3Z FHD18T3Z

Item No	Part No.	Mark	Description		Req'd	Remarks : Serial No.
1	20A75-42401		PIPE,BRAKE,RH	ﾊﾟｲﾌﾟ	1	INC.5
2	20A75-42501		PIPE,BRAKE,LH	ﾊﾟｲﾌﾟ	1	INC.5
3	20A75-42101		CLIP,PIPE	ｸﾘｯﾌﾟ	1	
4	20A75-42111		CLIP,PIPE	ｸﾘｯﾌﾟ	1	
5	23445-40431		RUBBER	ﾗﾊﾞｰ	2	

FIG.113 FOOT PEDAL PARTS

(F7Z154E0) フットペダルパーツ

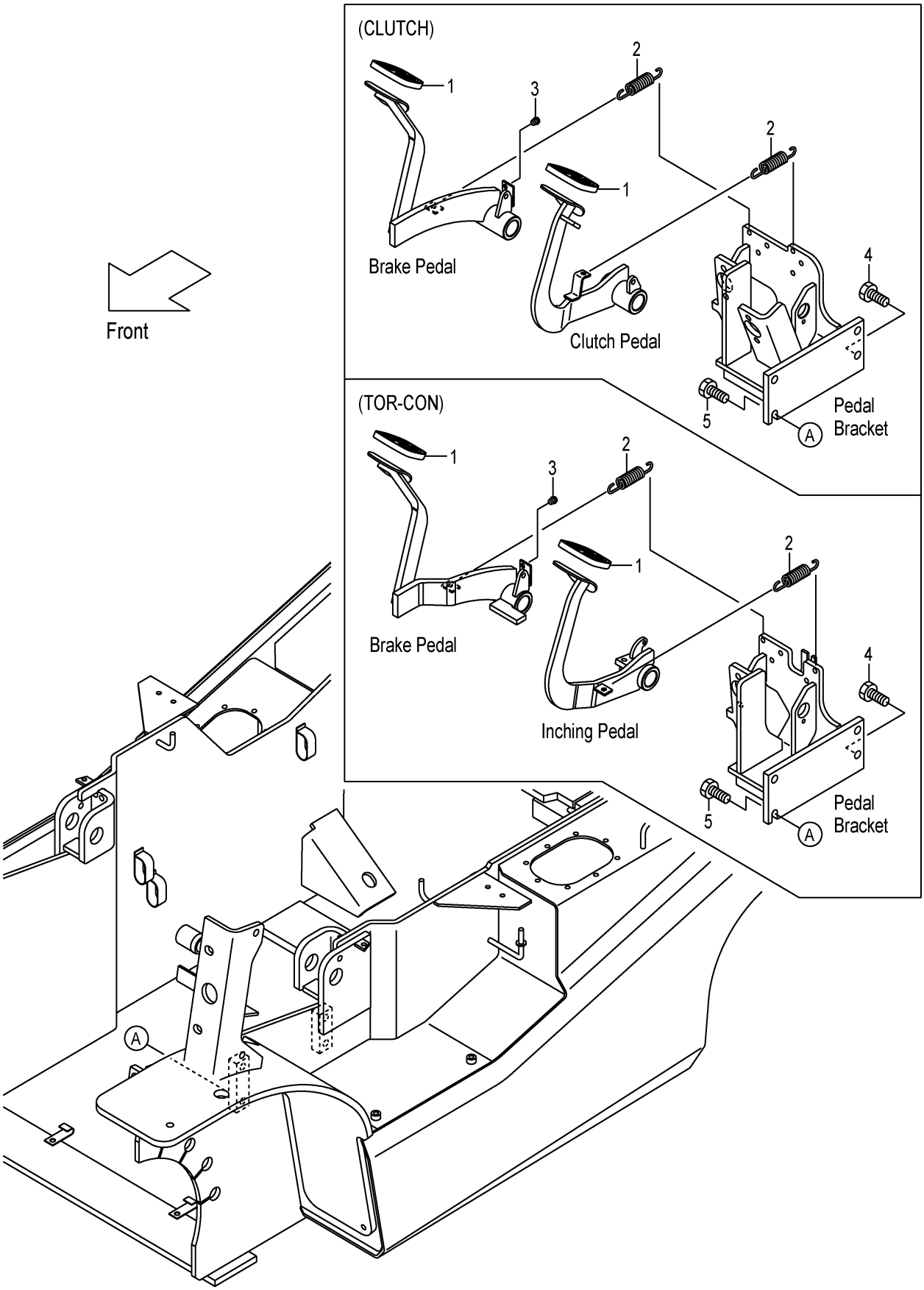

A:FHD15C3Z FHD15T3Z FHD18C3Z FHD18T3Z

Item No	Part No.	Mark	Description		Req'd	Remarks : Serial No.
1	239A5-42301		COVER,HEAD	ｶﾊﾞｰ	2	
2	24235-42091		SPRING	ｽﾌﾟﾘﾝｸﾞ	2	
3	23235-40091		RUBBER	ﾗﾊﾞｰ	1	
4	01184-12030		BOLT	ﾎﾞﾙﾄ	3	
5	01186-12035		BOLT	ﾎﾞﾙﾄ	1	

FIG.114 CLUTCH MASTER CYLINDER (CLUTCH)

(F7Z154K0) クラッチマスタシリンダ

KIT

K1 901

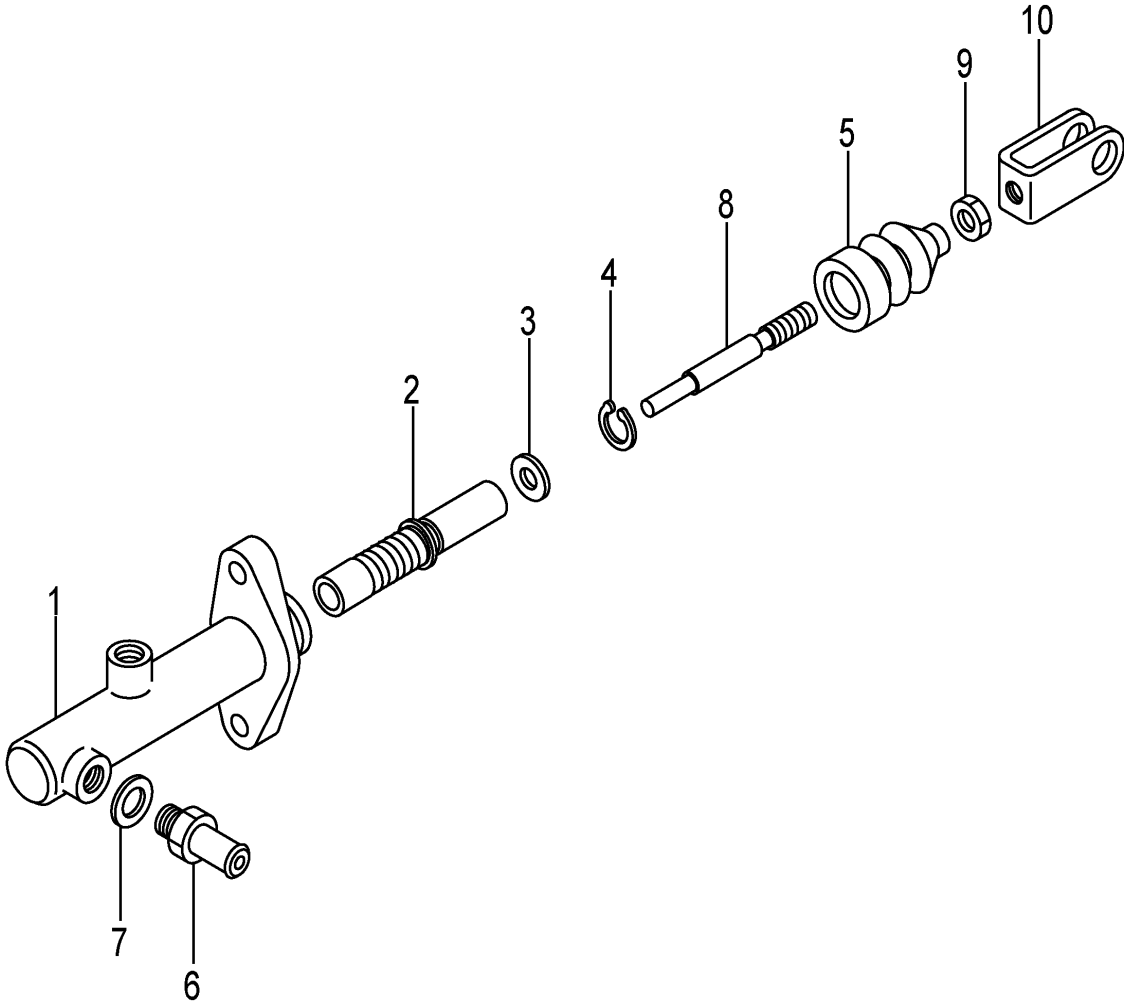

A:FHD15C3Z FHD18C3Z

Item No	Part No.	Mark	Description		Req'd	Remarks : Serial No.
A1	239A5-40501		CYL-ASSY,CLUTCH-MASTER	クラッチマスタシリンダアッセン	1	INC.1-10
901	216G5-32201	K1	KIT,REPAIR	リペアキット	1	INC.2-5
1	NO PART NO.	#	BODY,CYL	ボディ	1	
2	NO PART NO.	#*	PISTON	ピストン	1	
3	NO PART NO.	#*	PLATE,PISTON-STOPPER	プレート	1	
4	NO PART NO.	#*	RING,SNAP	スナップリング	1	
5	NO PART NO.	#*	BOOT	ブーツ	1	
6	216G5-32331		UNION	ユニオン	1	
7	216G5-32341		GASKET	ガスケット	1	
8	NO PART NO.	#	ROD,PUSH	ロッド	1	
9	01402-00008		NUT	ナット	1	
10	25595-42452		CLEVIS	クレビス	1	

FIG.115 BRAKE MASTER CYLINDER

(F7Z154M0) ﾌﾞﾚｰｷﾏｽﾀｼﾘﾝﾀﾞ

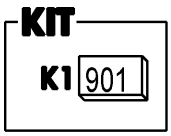

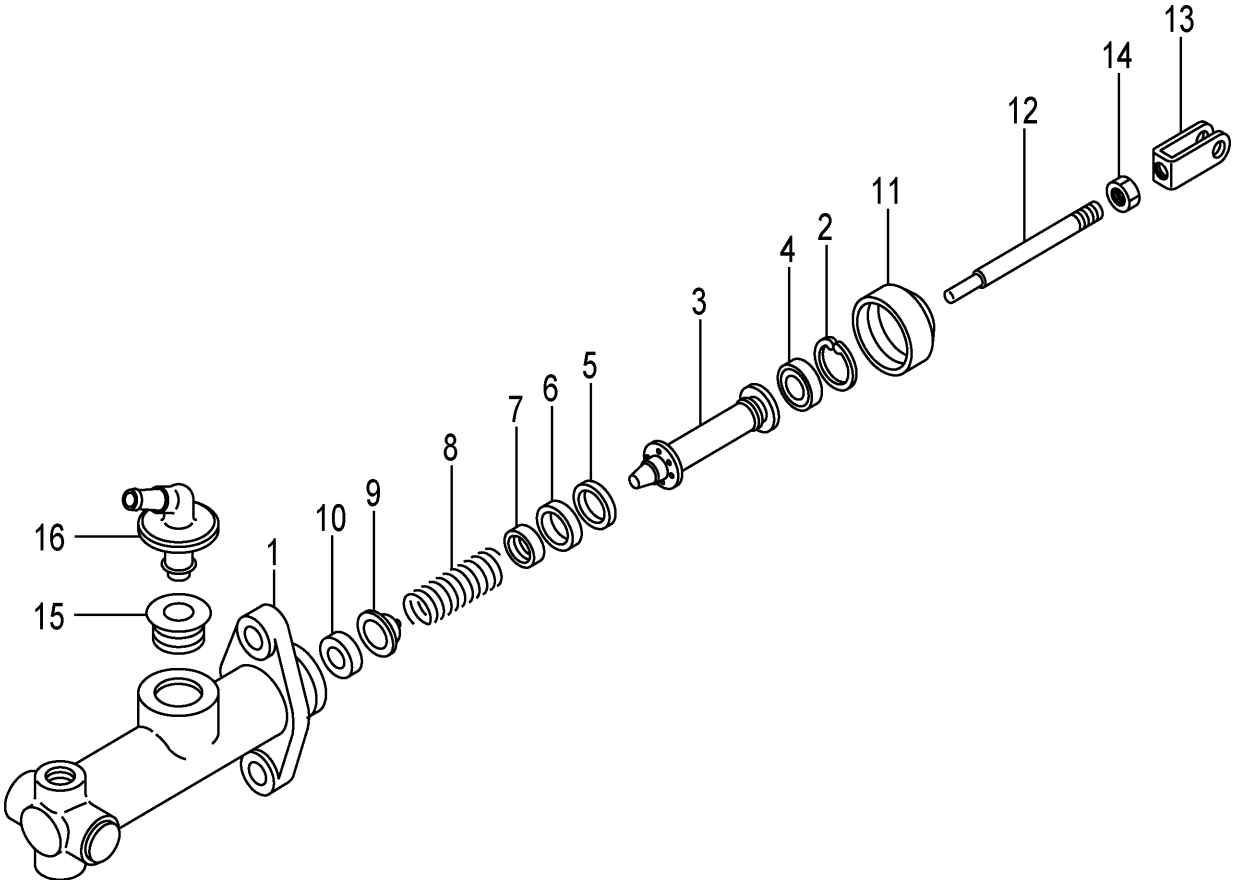

A:FHD15C3Z FHD15T3Z FHD18C3Z FHD18T3Z

Item No	Part No.	Mark	Description		Req'd	Remarks : Serial No.
A1	27045-40302		CYL-ASSY,BRAKE-MASTER	ﾌﾞﾚｰｷﾏｽﾀｼﾘﾝﾀﾞｱｯｾﾝ	1	INC.1-16
901	25595-42502	K1	KIT,REPAIR	ﾘﾍﾟｱｷｯﾄ	1	INC.2-11
1	NO PART NO.	#	BODY,CYL	ﾎﾞﾃﾞｨ	1	
2	NO PART NO.	#*	RING,SNAP	ｽﾅｯﾌﾟﾘﾝｸﾞ	1	
3	NO PART NO.	#*	PISTON	ﾋﾟｽﾄﾝ	1	
4	NO PART NO.	#*	CAP,SECONDARY	ｷｬｯﾌﾟ	1	
5	NO PART NO.	#*	SPACER	ｽﾍﾟｰｻ	1	
6	NO PART NO.	#*	CAP,PRIMARY	ｷｬｯﾌﾟ	1	
7	NO PART NO.	#*	SEAT,SPRING	ｼｰﾄ	1	
8	NO PART NO.	#*	SPRING	ｽﾌﾟﾘﾝｸﾞ	1	
9	NO PART NO.	#*	VALVE	ﾊﾞﾙﾌﾞ	1	
10	NO PART NO.	#*	SEAT,VALVE	ｼｰﾄ	1	
11	NO PART NO.	#*	BOOT	ﾌﾞｰﾂ	1	
A2	25595-42482		ROD-ASSY,PUSH	ﾌﾟｯｼｭﾛｯﾄﾞｱｯｾﾝ	1	INC.12-14
12	NO PART NO.	#	ROD,PUSH	ﾛｯﾄﾞ	1	
13	25595-42452		CLEVIS	ｸﾚﾋﾞｽ	1	
14	01402-00008		NUT	ﾅｯﾄ	1	
15	25595-42421		BUSHING	ﾌﾞｯｼﾝｸﾞ	1	
16	25595-42411		UNION,FILLER	ﾕﾆｵﾝ	1	

FIG.116 CLUTCH RELEASE CYLINDER (CLUTCH)

(F7Z154P0) クラッチリリースシリンダ

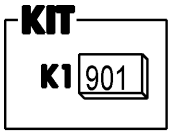

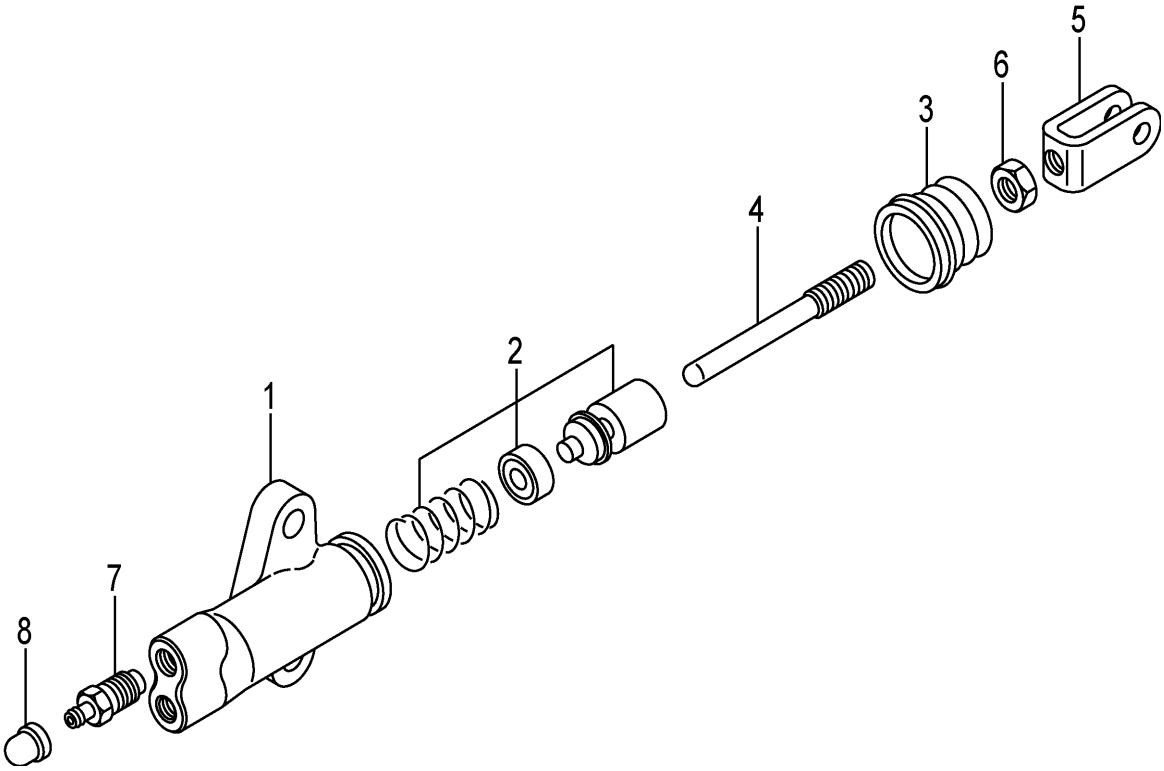

A:FHD15C3Z FHD18C3Z

Item No	Part No.	Mark	Description		Req'd	Remarks : Serial No.
A1	214A5-32312		CYL-ASSY,CLUTCH-RELEASE		1	INC.1-8
				ｸﾗｯﾁﾘﾘｰｽｼﾘﾝﾀﾞｱｯｾﾝ		
901	214A5-33012	K1	KIT,REPAIR	ﾘﾍﾟｱｷｯﾄ	1	INC.2,3
1	NO PART NO.	#	BODY,CYL	ﾎﾞﾃﾞｨ	1	
2	NO PART NO.	#*	PISTON	ﾋﾟｽﾄﾝ	1	
3	NO PART NO.	#*	BOOT	ﾌﾞｰﾂ	1	
A2	214A5-33052		ROD-ASSY,PUSH	ﾌﾟｯｼｭﾛｯﾄﾞｱｯｾﾝ	1	INC.4-6
4	214A5-33062		ROD,PUSH	ﾛｯﾄﾞ	1	
5	25595-42452		CLEVIS	ｸﾚﾋﾞｽ	1	
6	01402-00008		NUT	ﾅｯﾄ	1	
7	214A5-33031		VALVE,BLEEDER	ﾊﾞﾙﾌﾞ	1	
8	214A5-33041		CAP,BLEEDER	ｷｬｯﾌﾟ	1	

FIG.117 BRAKE LEVER

(F7Z15510) ﾌﾞﾚｰｷﾚﾊﾞｰ

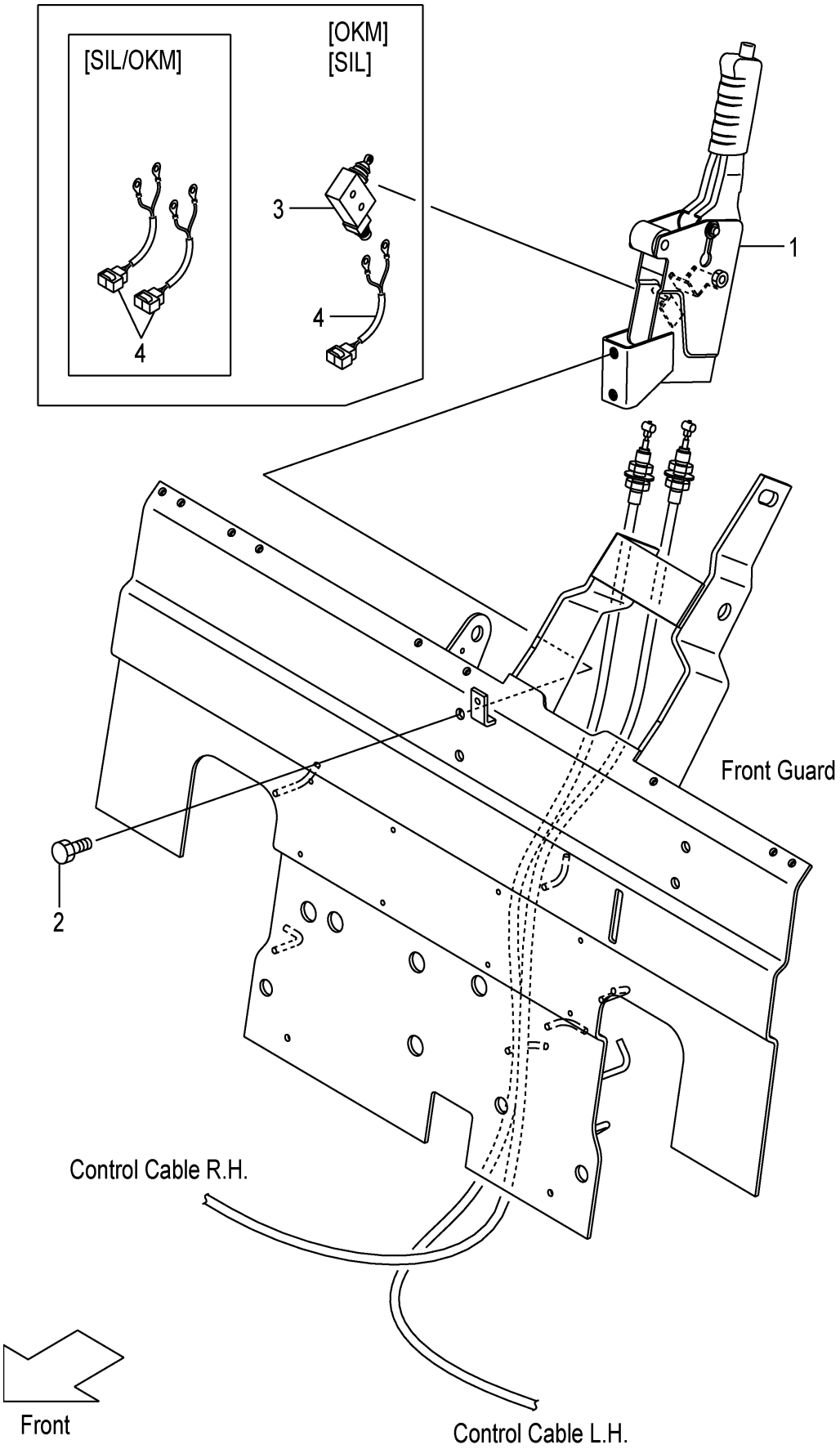

A:FHD15C3Z FHD15T3Z FHD18C3Z FHD18T3Z

Item No	Part No.	Mark	Description	Req'd	Remarks : Serial No.
1	22N55-50201		LEVER,PARKING-BRAKE レバー	1	
-	22N55-50101		LEVER,PARKING-BRAKE レバー	1	[OKM][SIL][SIL/OKM]
2	01184-10025		BOLT ボルト	2	
3	27912-62441		SWITCH,MICRO スイッチ	1	[OKM][SIL][SIL/OKM]
4	278M2-42061		WIRE-HARNESS,SWITCH ワイヤハーネス	1	[OKM][SIL]
-	278M2-42061		WIRE-HARNESS,SWITCH ワイヤハーネス	2	[SIL/OKM]

FIG.118 FRAME

(F7Z16110) フレーム

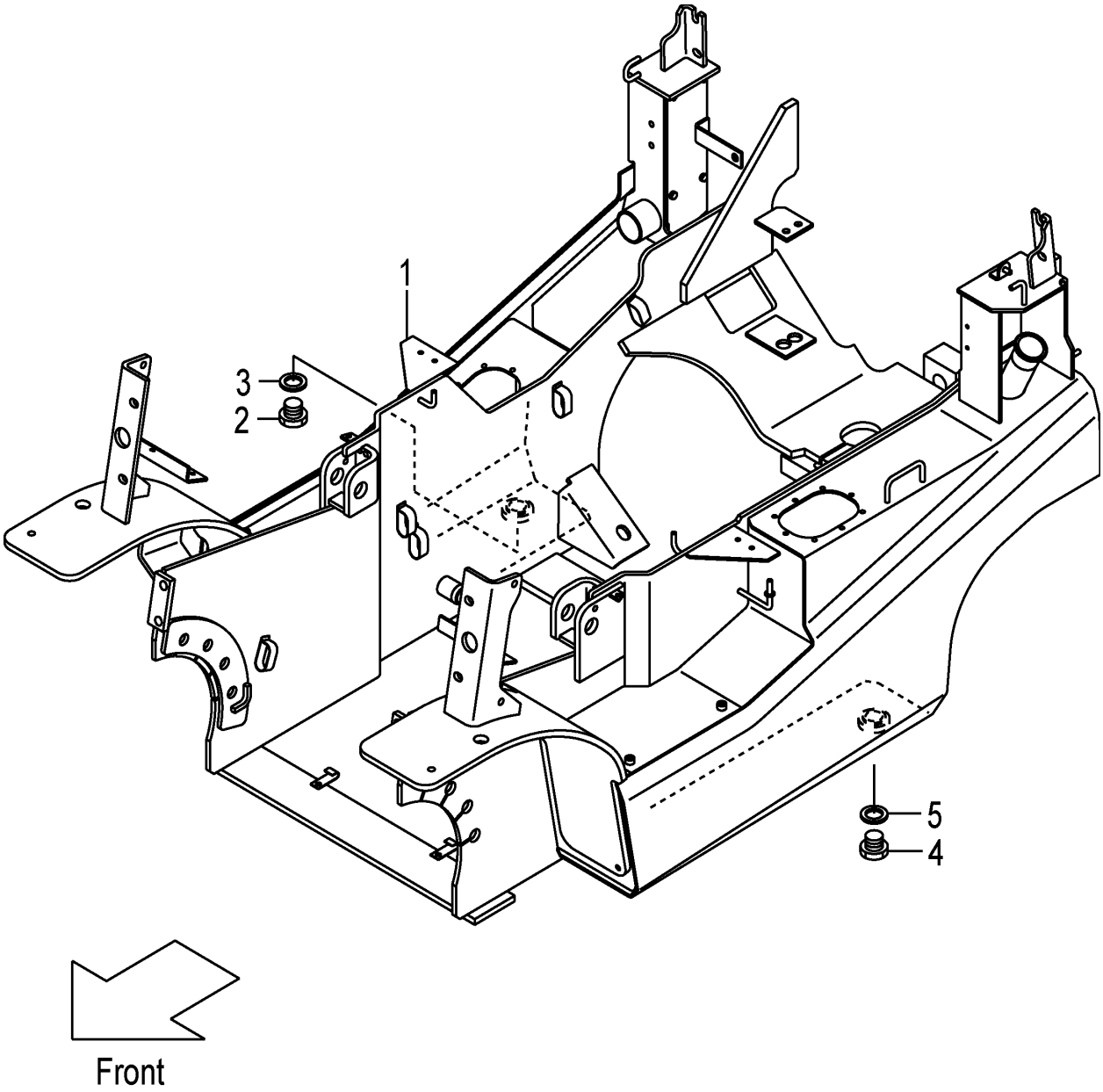

A:FHD15C3Z FHD15T3Z FHD18C3Z FHD18T3Z

Item No	Part No.	Mark	Description		Req'd	Remarks : Serial No.
1	NO PART NO.	#	FRAME	ﾌﾚｰﾑ	1	
2	21237-52051		PLUG,DRAIN	ﾌﾟﾗｸﾞ	1	
3	21237-52062		PACKING	ﾊﾟｯｷﾝｸﾞ	1	
4	21237-52051		PLUG,DRAIN	ﾌﾟﾗｸﾞ	1	
5	21237-52062		PACKING	ﾊﾟｯｷﾝｸﾞ	1	

FIG.119 OIL TANK

(F7Z16120) オイルタンク

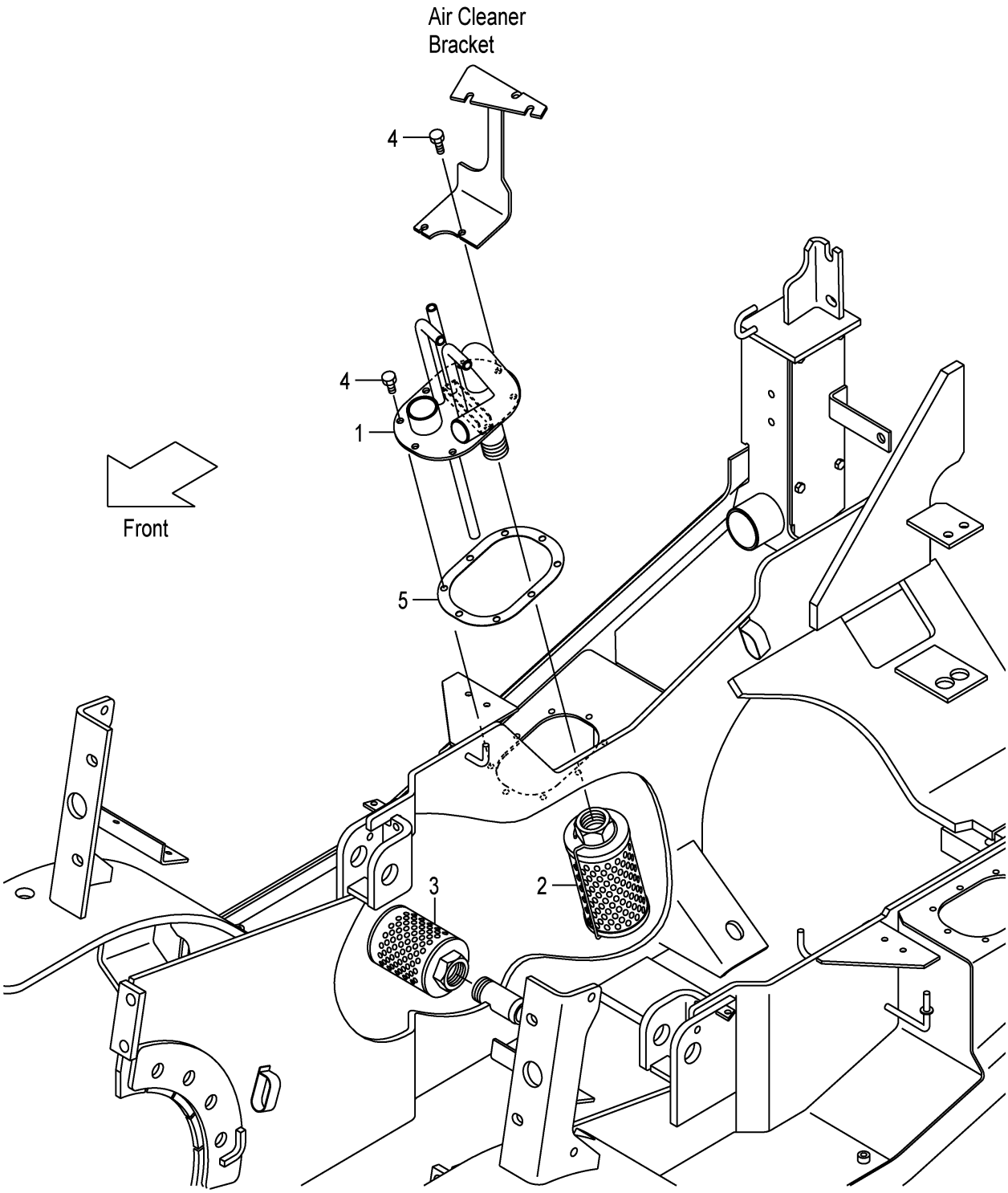

A:FHD15C3Z FHD15T3Z FHD18C3Z FHD18T3Z

Item No	Part No.	Mark	Description		Req'd	Remarks : Serial No.
1	20A77-52301		PIPE,RETURN	ﾊﾟｲﾌﾟ	1	1-339
-	20A77-52302		PIPE,RETURN	ﾊﾟｲﾌﾟ	1	340-
-	22N57-52302		PIPE,RETURN	ﾊﾟｲﾌﾟ	1	1-339 [FC][RTL]
-	22N57-52303		PIPE,RETURN	ﾊﾟｲﾌﾟ	1	340- [FC][RTL]
2	271A7-52301		FILTER,RETURN	ﾌｨﾙﾀ	1	
3	22N57-53001		FILTER,SUCTION	ﾌｨﾙﾀ	1	
4	229F2-22151		BOLT	ﾎﾞﾙﾄ	8	
5	22N52-22201		PACKING	ﾊﾟｯｷﾝｸﾞ	1	

FIG.120 OIL CAP & LEVEL

(F7Z16130) オイルキャップ&レベル

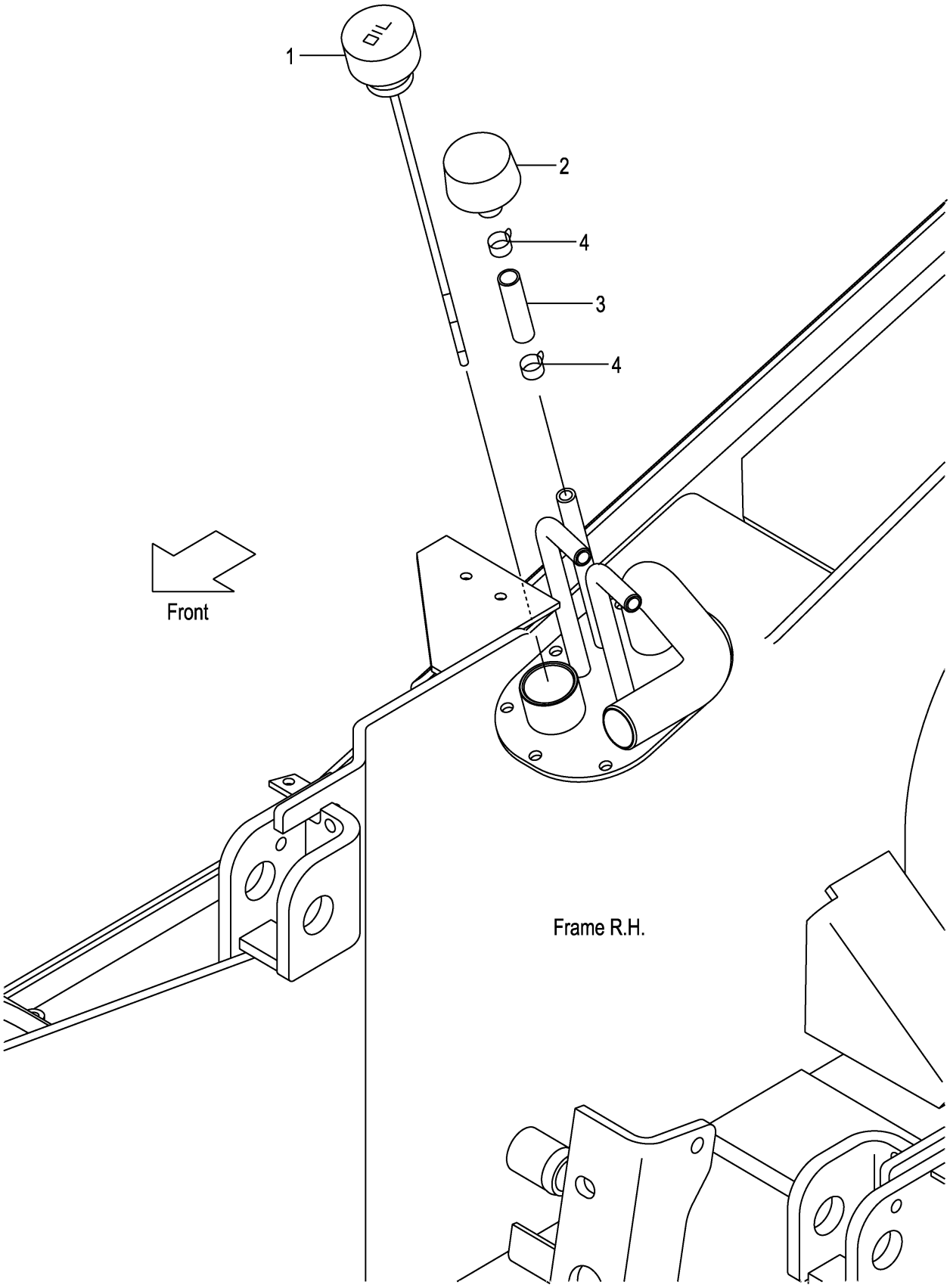

FIG.120

(F7Z16130)

A:FHD15C3Z FHD15T3Z FHD18C3Z FHD18T3Z:1-339

Item No	Part No.	Mark	Description		Req'd	Remarks : Serial No.
1	22N57-52102		CAP,OIL	ｷｬｯﾌﾟ	1	
2	216G7-52201		CAP,BREATHER	ｷｬｯﾌﾟ	1	
3	04710-04005		HOSE	ﾎｰｽ	1	
4	04914-00019		CLIP	ｸﾘｯﾌﾟ	2	

FIG.120A OIL CAP & LEVEL

(F7Z16131) オイルキャップ&レベル

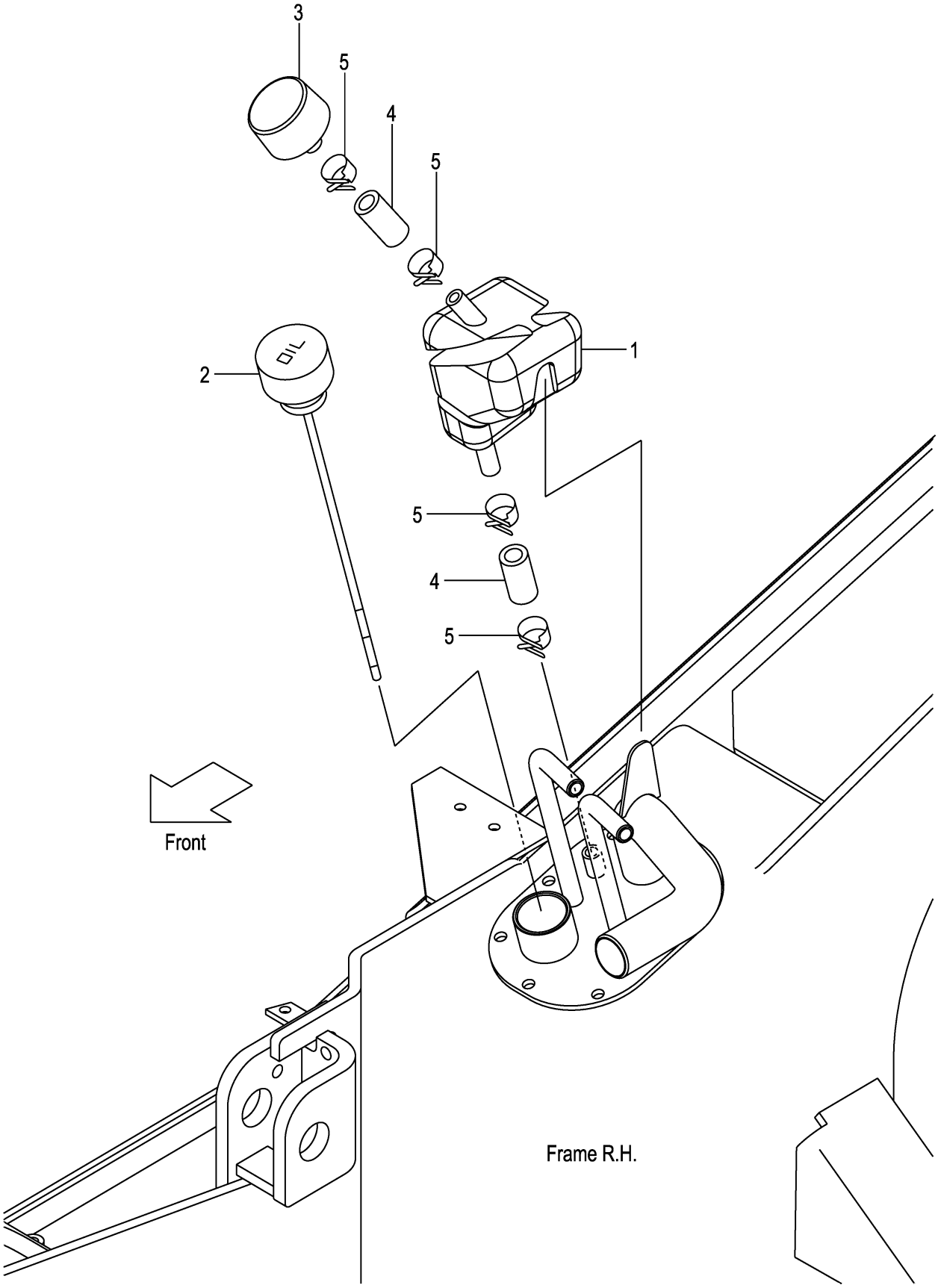

A:FHD15C3Z FHD15T3Z FHD18C3Z FHD18T3Z:340-

Item No	Part No.	Mark	Description		Req'd	Remarks : Serial No.
1	22N57-53101		TANK,SUB	ﾀﾝｸ	1	
2	22N57-52102		CAP,OIL	ｷｬｯﾌﾟ	1	
3	216G7-52201		CAP,BREATHER	ｷｬｯﾌﾟ	1	
4	04710-04004		HOSE	ﾎｰｽ	2	
5	04914-00019		CLIP	ｸﾘｯﾌﾟ	4	

FIG.121 FUEL TANK

(F7Z16150) フューエルタンク

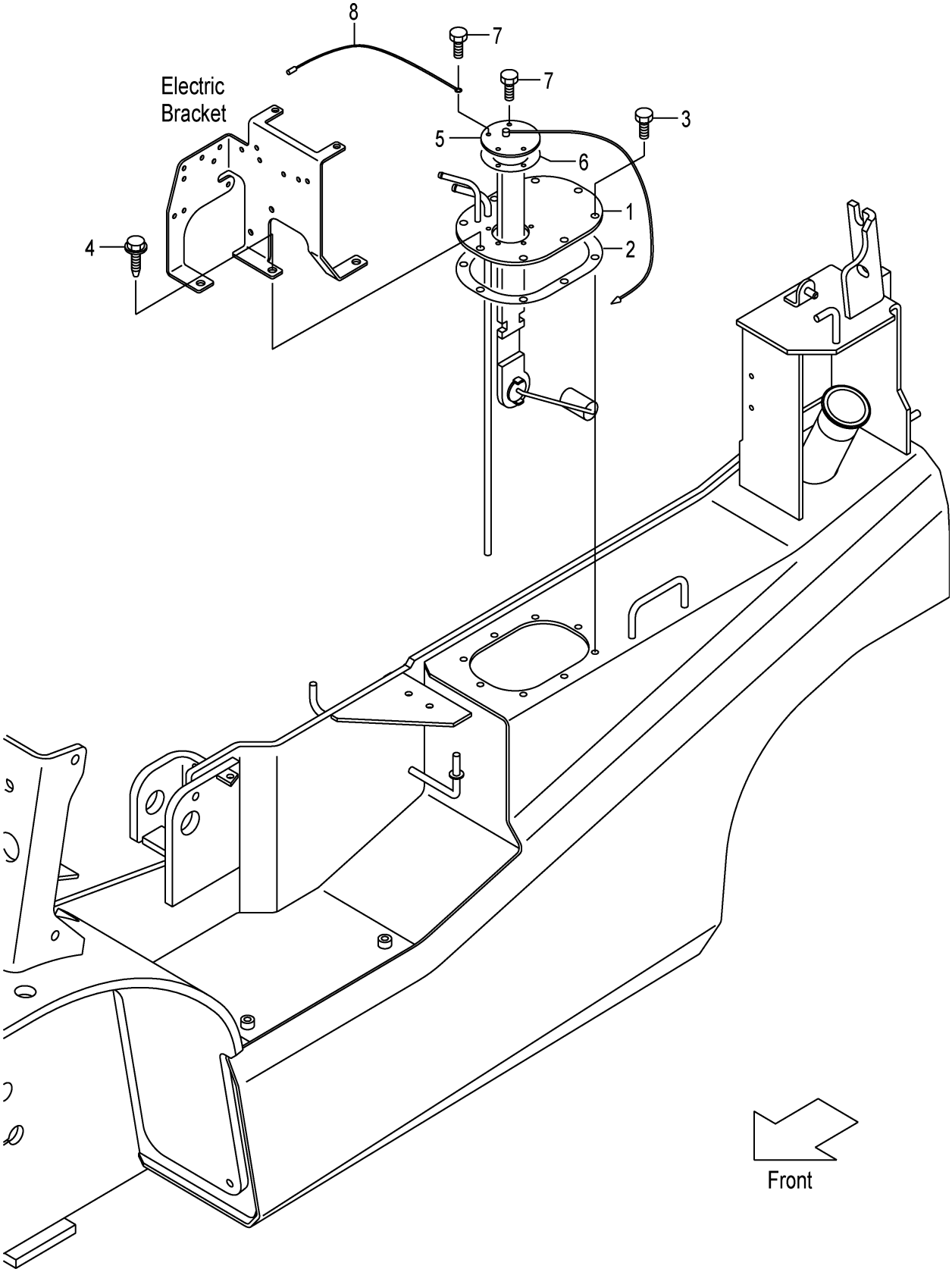

FIG.121

(F7Z16150)

A:FHD15C3Z FHD15T3Z FHD18C3Z FHD18T3Z

Item No	Part No.	Mark	Description		Req'd	Remarks : Serial No.
1	22N52-22101		PLATE,FUEL-TOP	ﾌﾟﾚｰﾄ	1	
2	22N52-22201		GASKET	ｶﾞｽｹｯﾄ	1	
3	229F2-22151		BOLT	ﾎﾞﾙﾄ	6	
4	216G6-43271		SCREW	ｽｸﾘｭ	2	
5	222A2-22061		GAUGE,FUEL	ｹﾞｰｼﾞ	1	
6	229F2-22071		GASKET	ｶﾞｽｹｯﾄ	1	
7	229F2-22171		BOLT	ﾎﾞﾙﾄ	5	
8	25592-42121		WIRE	ﾜｲﾔ	1	

FIG.122 BALANCE WEIGHT

(F7Z16310) ﾊﾞﾗﾝｽｳｴｲﾄ

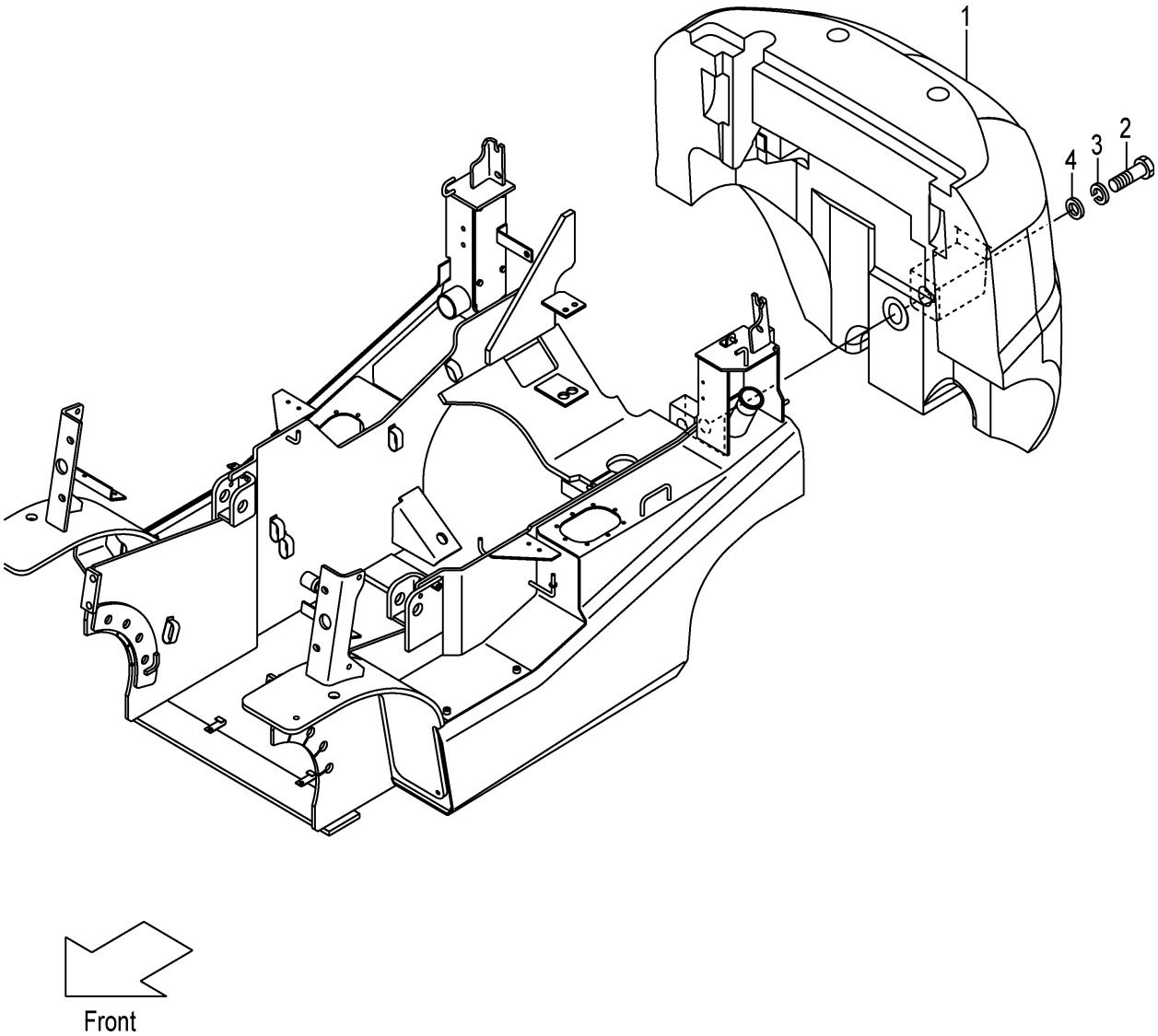

A:FHD15C3Z FHD15T3Z
B:FHD18C3Z FHD18T3Z

Item No	Part No.	Mark	Description		Req'd	Remarks : Serial No.
1	NO PART NO.	#	WEIGHT,BALANCE	ｳｴｲﾄ	1	A
-	NO PART NO.	#	WEIGHT,BALANCE	ｳｴｲﾄ	1	B
2	01110-30090		BOLT	ﾎﾞﾙﾄ	1	A
-	01110-30150		BOLT	ﾎﾞﾙﾄ	1	B
3	02010-00030		WASHER	ﾜｯｼｬ	1	
4	22216-30051		WASHER	ﾜｯｼｬ	1	

FIG.123 BALANCE WEIGHT [HC]

(F7Z16320) ﾊﾞﾗﾝｽｳｴｲﾄ

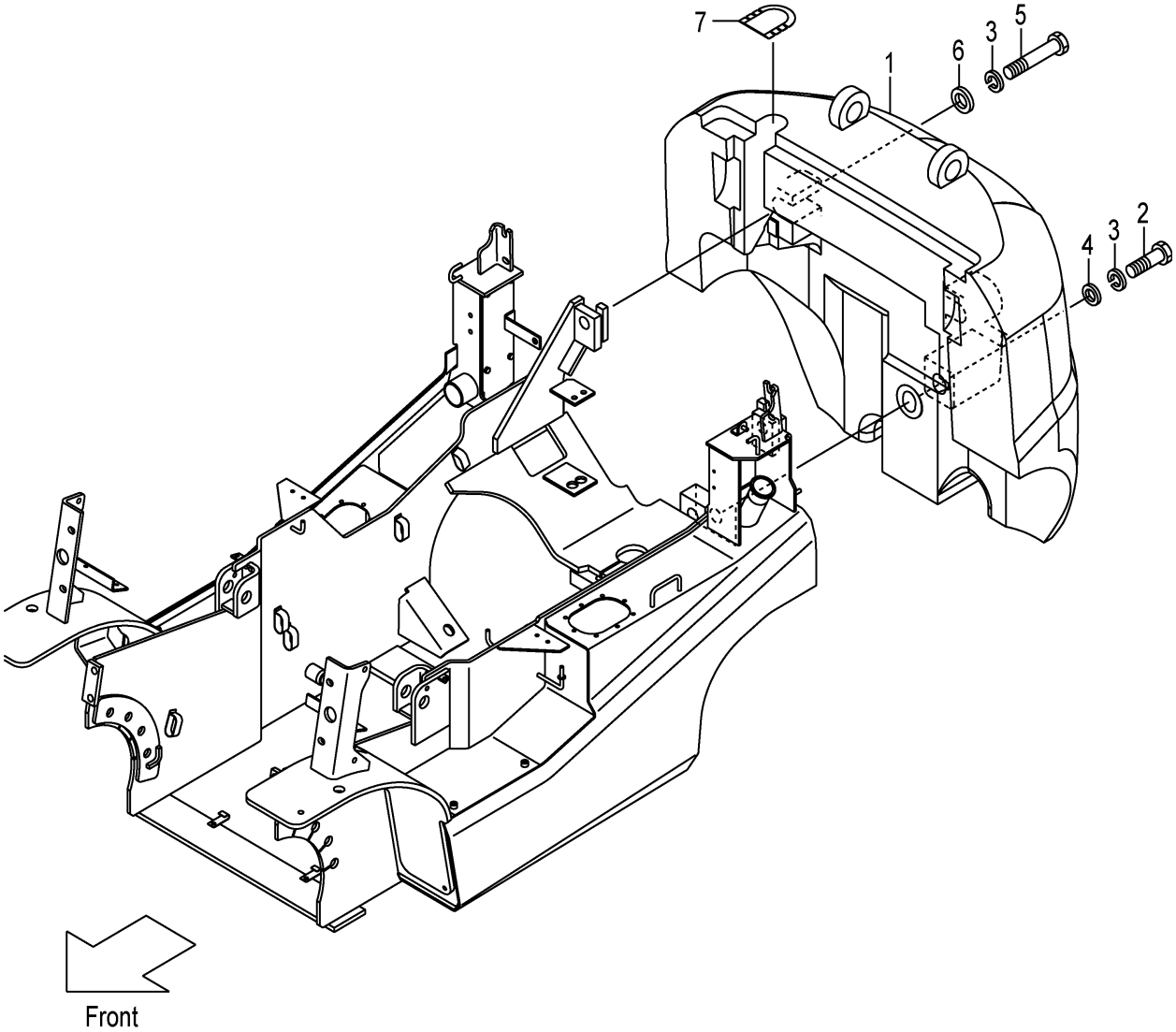

A:FHD15C3Z FHD15T3Z
B:FHD18C3Z FHD18T3Z

Item No	Part No.	Mark	Description		Req'd	Remarks : Serial No.
1	NO PART NO.	#	WEIGHT,BALANCE	ｳｴｲﾄ	1	A [HC]
-	NO PART NO.	#	WEIGHT,BALANCE	ｳｴｲﾄ	1	B [HC]
2	01110-30090		BOLT	ﾎﾞﾙﾄ	1	A [HC]
-	01110-30150		BOLT	ﾎﾞﾙﾄ	1	B [HC]
3	02010-00030		WASHER	ﾜｯｼｬ	3	[HC]
4	22216-30051		WASHER	ﾜｯｼｬ	1	[HC]
5	01113-30160		BOLT	ﾎﾞﾙﾄ	2	A [HC]
-	01113-30190		BOLT	ﾎﾞﾙﾄ	2	B [HC]
6	225R6-32001		WASHER	ﾜｯｼｬ	2	[HC]
7	22N56-32301		COVER	ｶﾊﾞｰ	1	112- [HC]

FIG.124 FRONT GUARD

(F7Z16410) ﾌﾛﾝﾄｶﾞｰﾄﾞ

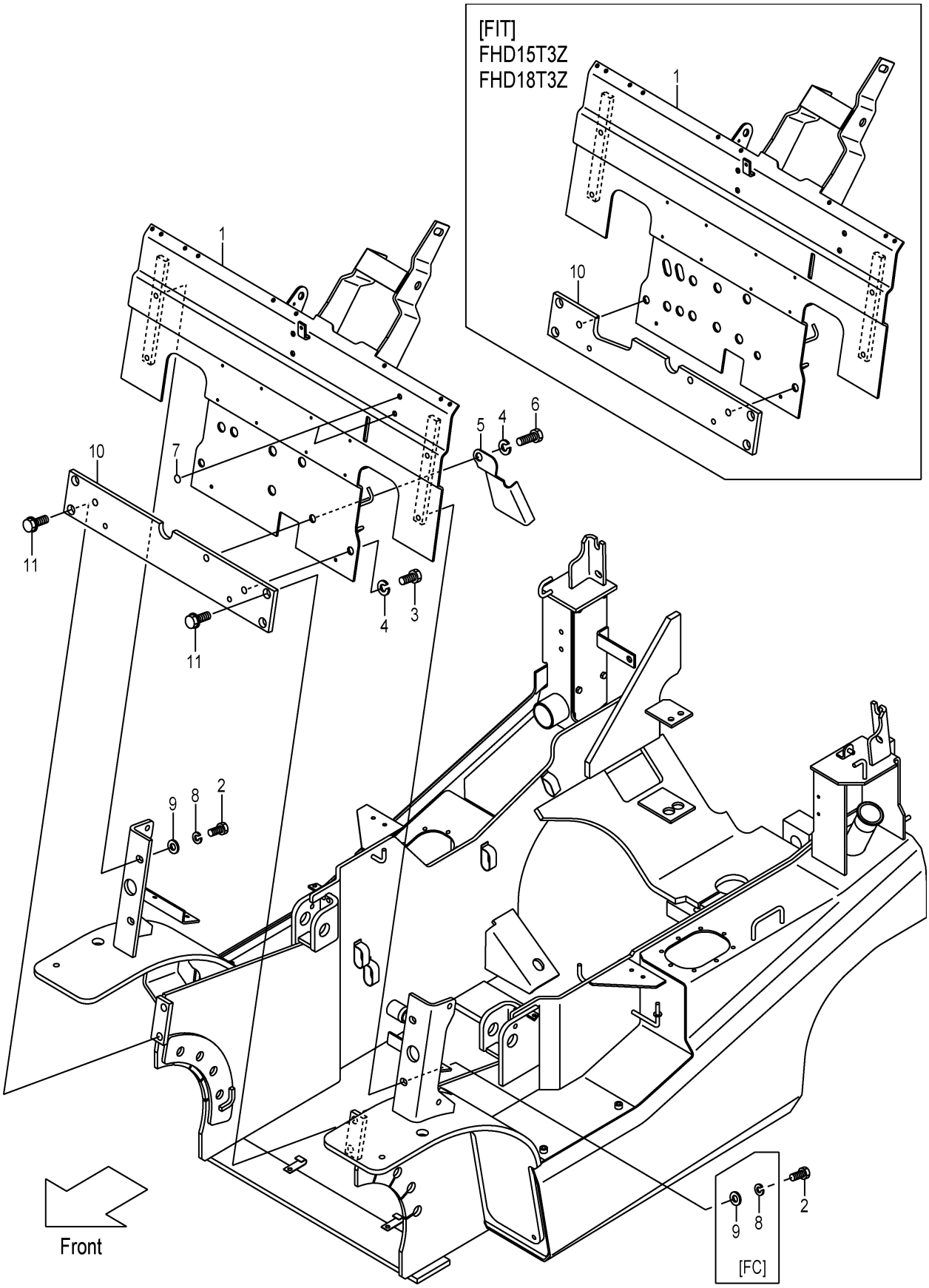

A:FHD15C3Z FHD18C3Z
B:FHD15T3Z FHD18T3Z

Item No	Part No.	Mark	Description		Req'd	Remarks : Serial No.
1	20A76-40103		GUARD,FRONT	ｶﾞｰﾄﾞ	1	
-	50A72-B0303		GUARD,FRONT	ｶﾞｰﾄﾞ	1	B
						[FIT]
2	01186-12025		BOLT	ﾎﾞﾙﾄ	4	
-	01109-12025		BOLT	ﾎﾞﾙﾄ	4	[FC]
3	01100-16020		BOLT	ﾎﾞﾙﾄ	2	
4	02010-00016		WASHER	ﾜｯｼｬ	3	
5	20A76-42952		GUIDE	ｶﾞｲﾄﾞ	1	
6	01100-16025		BOLT	ﾎﾞﾙﾄ	1	
7	22N55-13181		SEAL,PANEL-COVER	ｼｰﾙ	2	
8	02013-00012		WASHER	ﾜｯｼｬ	4	[FC]
9	02001-00012		WASHER	ﾜｯｼｬ	4	[FC]
10	20A76-42042		PLATE,FRONT	ﾌﾟﾚｰﾄ	1	
-	50A72-B2012		PLATE,FRONT	ﾌﾟﾚｰﾄ	1	B
						[FIT]
11	216G6-43561		BOLT,FLANGE	ﾎﾞﾙﾄ	4	

FIG.125 BONNET

(F7Z16420) ﾎﾞﾝﾈｯﾄ

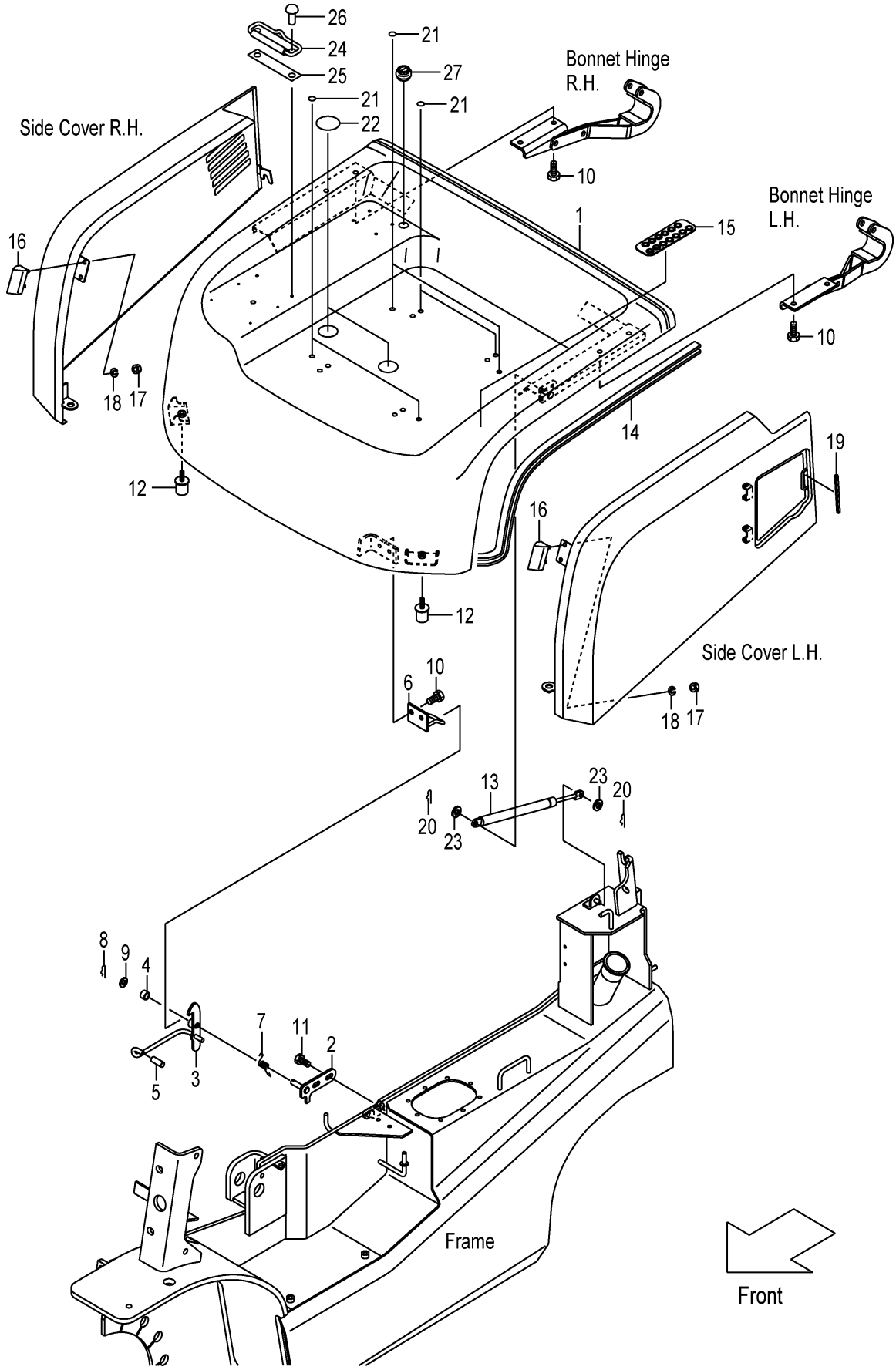

A:FHD15C3Z FHD18C3Z
B:FHD15T3Z FHD18T3Z

Item No	Part No.	Mark	Description		Req'd	Remarks : Serial No.
1	22N56-40203		BONNET	ﾎﾞﾝﾈｯﾄ	1	
-	52N59-20412		BONNET	ﾎﾞﾝﾈｯﾄ	1	[TOB]
-	52N52-B0312		BONNET	ﾎﾞﾝﾈｯﾄ	1	B
						[FIT]
A1	243C6-40021		CATCH-ASSY,BONNET	ﾎﾞﾝﾈｯﾄｷｬｯﾁｱｯｾﾝ	1	INC.2-9
2	NO PART NO.	#	BRACKET,BONNET-CATCH	ﾌﾞﾗｹｯﾄ	1	
3	NO PART NO.	#	LATCH	ﾗｯﾁ	1	
4	23655-22101		BUSHING	ﾌﾞｯｼﾝｸﾞ	1	
5	216G6-52291		CAP	ｷｬｯﾌﾟ	1	
6	216G6-42451		HOOK	ﾌｯｸ	1	
7	216G6-42481		SPRING	ｽﾌﾟﾘﾝｸﾞ	1	
8	216H5-42141		PIN,SNAP	ﾋﾟﾝ	1	
9	02000-00010		WASHER	ﾜｯｼｬ	1	
10	01183-08016		BOLT	ﾎﾞﾙﾄ	6	
11	01185-08016		BOLT	ﾎﾞﾙﾄ	2	
12	22N56-43051		RUBBER,STOPPER	ﾗﾊﾞｰ	2	
13	22N56-43041		SPRING,GAS	ｽﾌﾟﾘﾝｸﾞ	1	
14	22N56-40361		RUBBER,SEAL,BONNET	ﾗﾊﾞｰ	1	
15	22N56-43221		RUBBER	ﾗﾊﾞｰ	1	
16	22N56-43281		STOPPER,BONNET	ｽﾄｯﾊﾟ	2	
17	01400-00006		NUT	ﾅｯﾄ	4	
18	02010-00006		WASHER	ﾜｯｼｬ	4	
19	22N56-43271		RUBBER	ﾗﾊﾞｰ	1	
20	216H3-92171		PIN,SNAP	ﾋﾟﾝ	2	
21	22N56-43531		SEAL,PANEL-COVER	ｼｰﾙ	6	
22	22N56-43541		SEAT,BONNET	ｼｰﾄ	2	
23	02000-00008		WASHER	ﾜｯｼｬ	2	
24	25599-32001		BINDER	ﾊﾞｲﾝﾀﾞ	1	
25	25599-32021		SHEET,BINDER	ｼｰﾄ	1	
26	22256-42001		RIVET	ﾘﾍﾞｯﾄ	2	
27	27662-62711		GROMMET	ｸﾞﾛﾒｯﾄ	1	

FIG.126 RADIATOR COVER

(F7Z16430) ﾗｼﾞｴｰﾀｶﾊﾞｰ

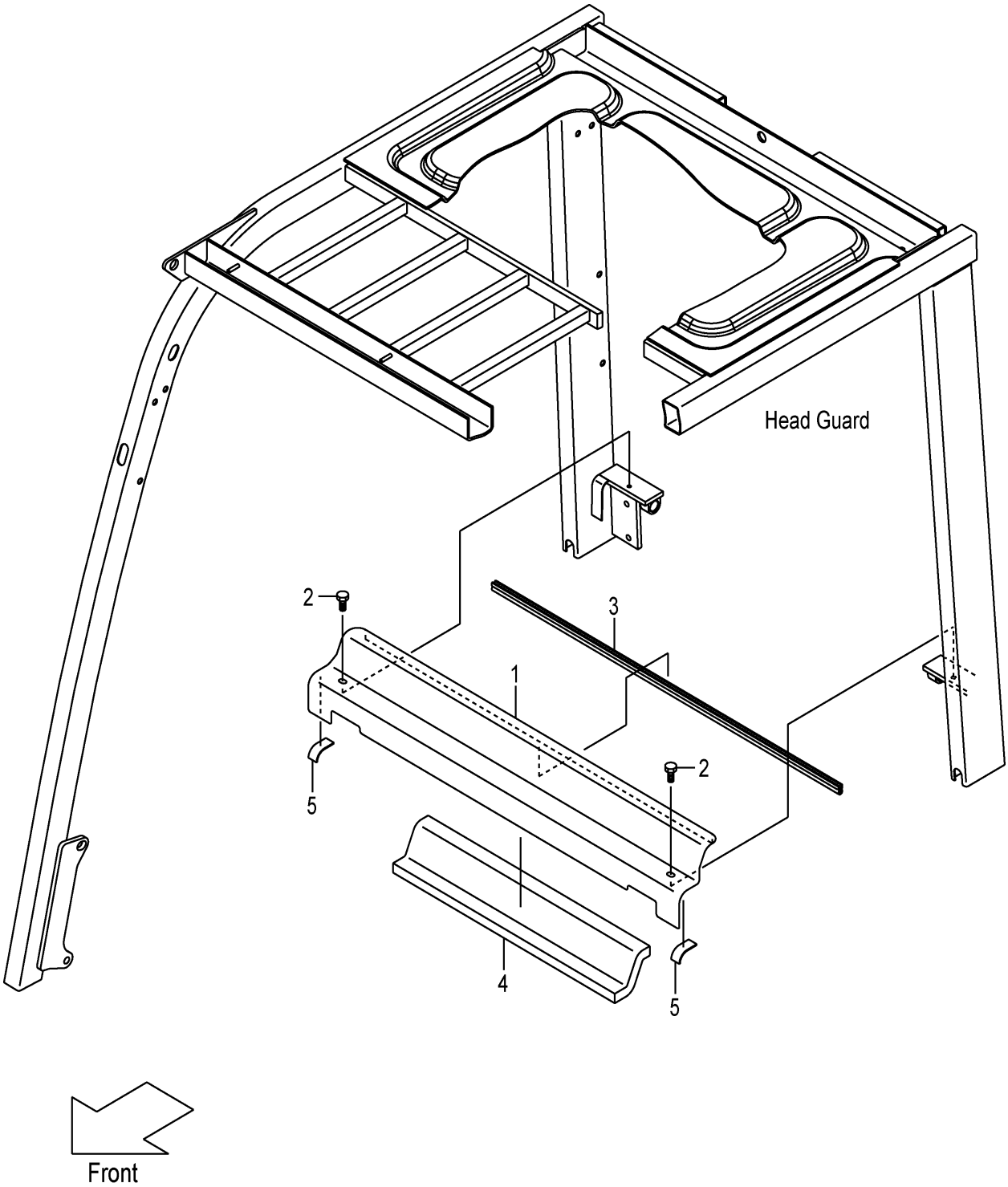

FIG.126

(F7Z16430)

A:FHD15C3Z FHD15T3Z FHD18C3Z FHD18T3Z

Item No	Part No.	Mark	Description		Req'd	Remarks : Serial No.
1	20A76-40311		COVER,RADIATOR	ｶﾊﾞｰ	1	
-	50A75-40211		COVER,RADIATOR	ｶﾊﾞｰ	1	[AW061]
2	01181-08016		BOLT	ﾎﾞﾙﾄ	2	
3	537A0-52531		SEAL,RUBBER	ｼｰﾙ	1	
4	20A76-42801		RUBBER,RAD-COVER	ﾗﾊﾞｰ	1	
5	277H6-52081		RUBBER	ﾗﾊﾞｰ	2	

FIG.127 BONNET HINGE

(F7Z16440) ﾎﾞﾝﾈｯﾄﾋﾝｼﾞ

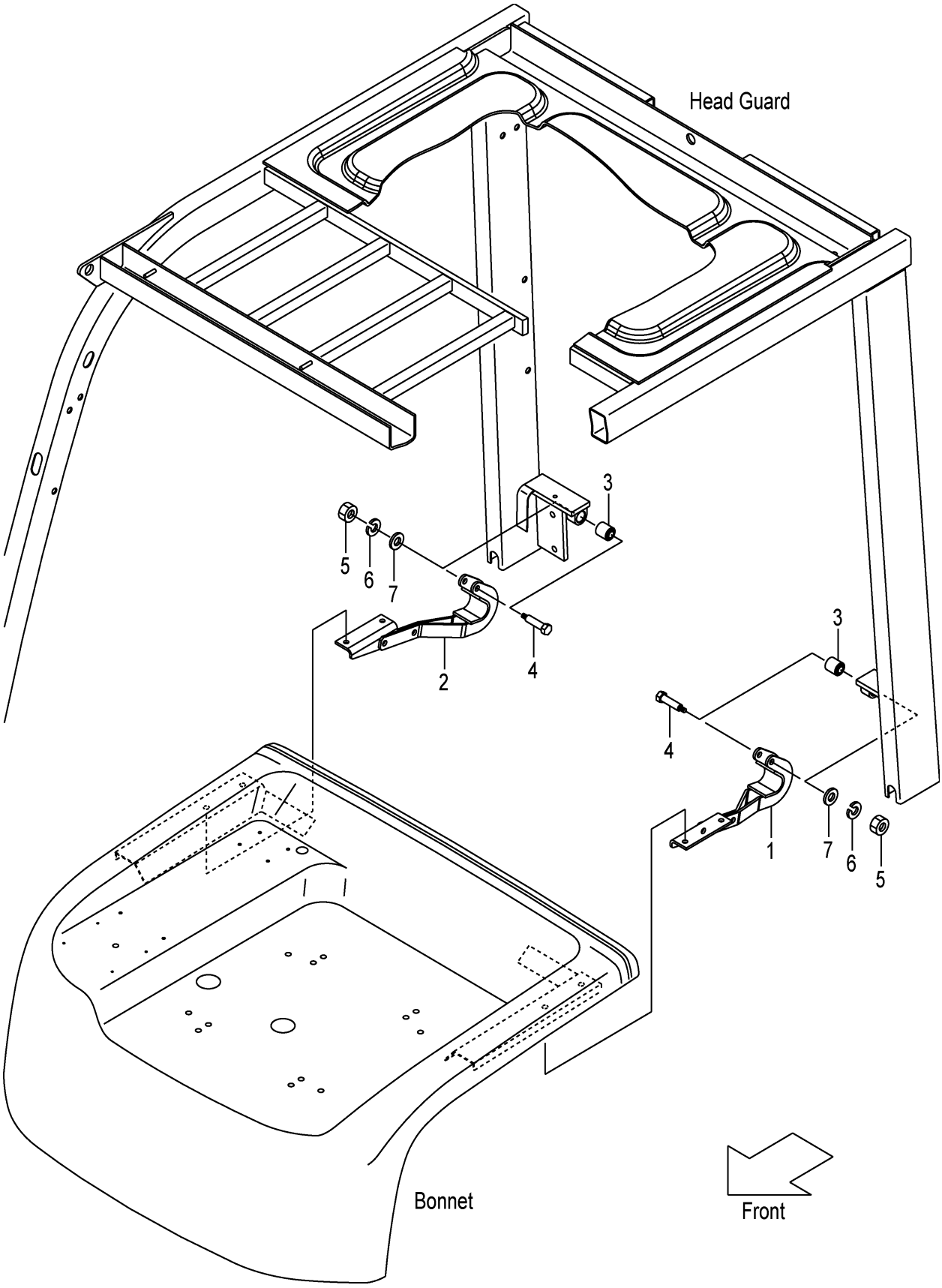

FIG.127

(F7Z16440)

A:FHD15C3Z FHD15T3Z FHD18C3Z FHD18T3Z

Item No	Part No.	Mark	Description		Req'd	Remarks : Serial No.
1	22N56-42602		HINGE,LH	ﾋﾝｼﾞ	1	
2	22N56-42612		HINGE,RH	ﾋﾝｼﾞ	1	
3	216G6-42921		BUSHING	ﾌﾞｯｼﾝｸﾞ	2	
4	216G6-42931		BOLT	ﾎﾞﾙﾄ	2	
5	01400-00006		NUT	ﾅｯﾄ	2	
6	02010-00006		WASHER	ﾜｯｼｬ	2	
7	02000-00006		WASHER	ﾜｯｼｬ	2	

FIG.128 FLOOR BOARD

(F7Z16450) ﾌﾛｱﾎﾞｰﾄﾞ

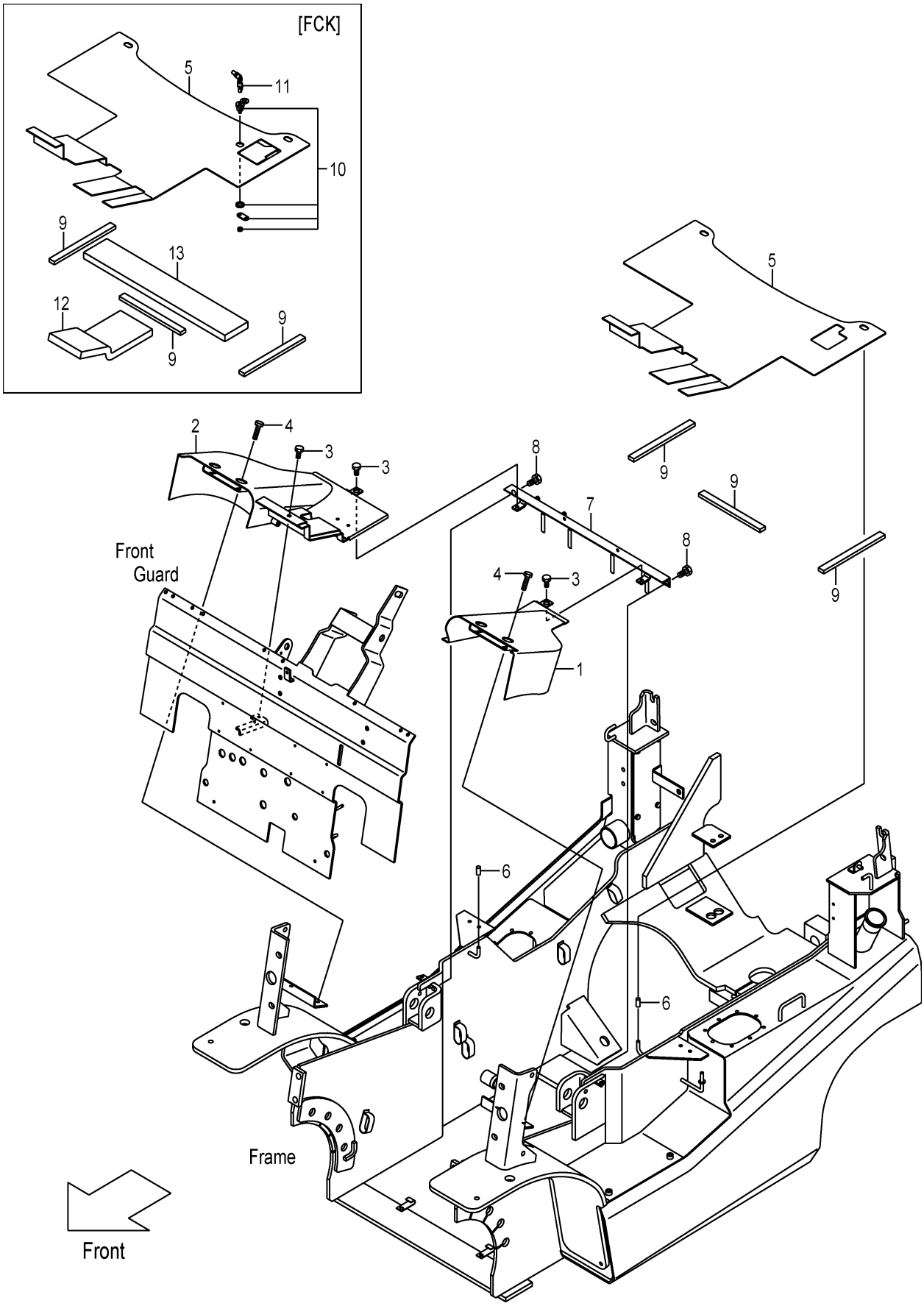

FIG.128

(F7Z16450)

A:FHD15C3Z FHD15T3Z FHD18C3Z FHD18T3Z

Item No	Part No.	Mark	Description		Req'd	Remarks : Serial No.
1	20A76-50201		COVER,LH	ｶﾊﾞｰ	1	
2	20A76-50211		COVER,RH	ｶﾊﾞｰ	1	
3	01185-08016		BOLT	ﾎﾞﾙﾄ	3	
4	01185-08030		BOLT	ﾎﾞﾙﾄ	4	
5	20A76-52201		BOARD,FLOOR	ﾎﾞｰﾄﾞ	1	
-	50A78-10201		BOARD,FLOOR	ﾎﾞｰﾄﾞ	1	[FCK]
6	216G6-52291		CAP	ｷｬｯﾌﾟ	2	
7	20A76-52401		ANGLE	ｱﾝｸﾞﾙ	1	
8	01185-10016		BOLT	ﾎﾞﾙﾄ	2	
9	216G6-52161		RUBBER	ﾗﾊﾞｰ	3	
A1	52N58-10301		LOCK-ASSY,COIN	ｺｲﾝﾛｯｸｱｯｾﾝ	1	[FCK] INC.10,11
10	52N58-12501		CYL,KEY	ｼﾘﾝﾀﾞ	1	[FCK]
11	52N58-12511		KEY	ｷｰ	1	[FCK](1SET=2PCS)
12	20A76-52221		RUBBER,FLOOR-BOARD	ﾗﾊﾞｰ	1	[FCK]
13	22N56-52231		RUBBER,FLOOR-BOARD	ﾗﾊﾞｰ	1	[FCK]

FIG.129 STEP & FLOOR MAT

(F7Z16460) ｽﾃｯﾌﾟ&ﾌﾛｱﾏｯﾄ

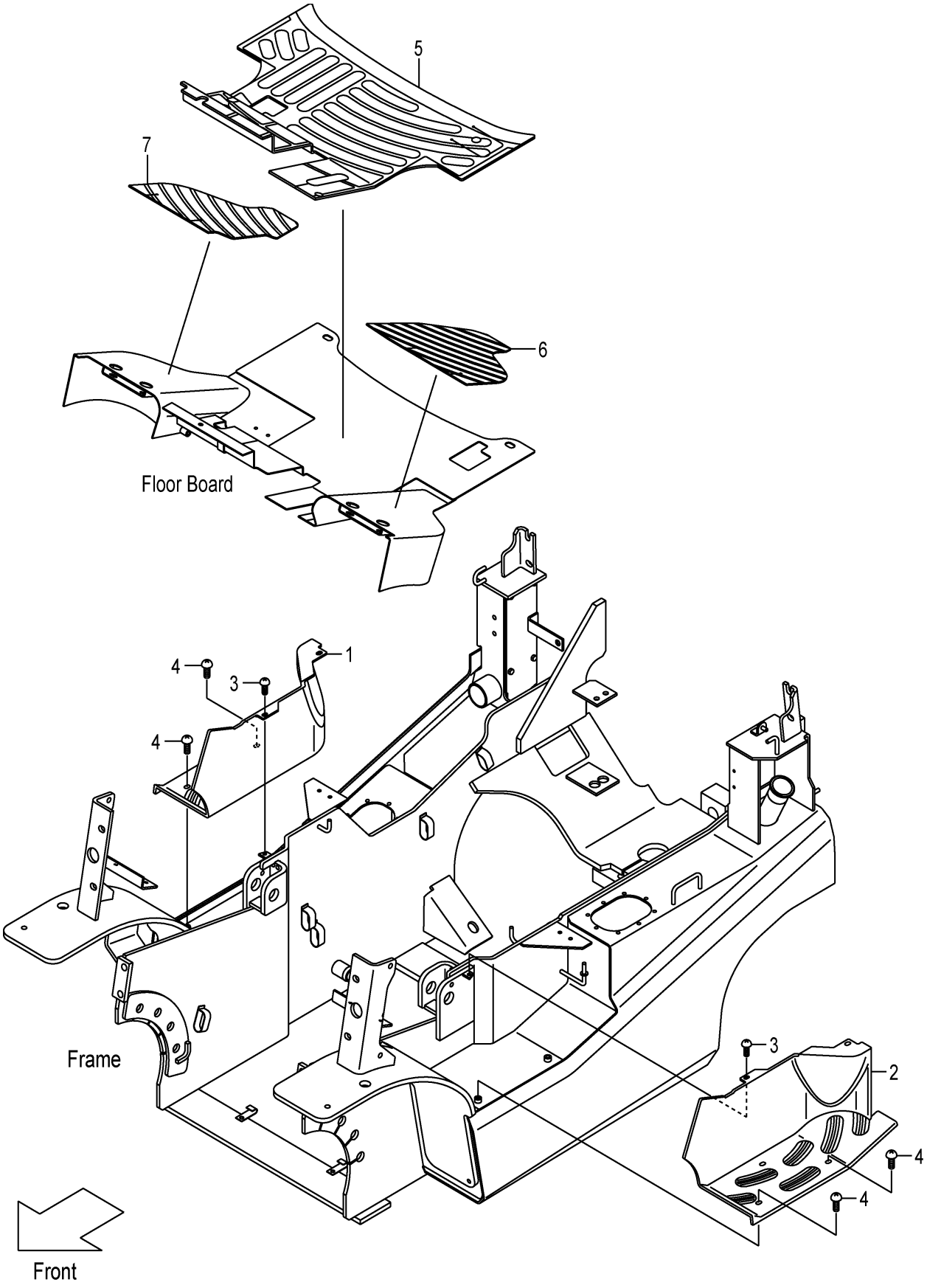

FIG.129

(F7Z16460)

A:FHD15C3Z FHD15T3Z FHD18C3Z FHD18T3Z

Item No	Part No.	Mark	Description		Req'd	Remarks : Serial No.
1	20A76-42901		COVER,STEP,RH	ｶﾊﾞｰ	1	
2	20A76-42911		COVER,STEP,LH	ｶﾊﾞｰ	1	
3	225R6-42031		SCREW	ｽｸﾘｭ	2	
4	278M6-42031		SCREW	ｽｸﾘｭ	4	
5	20A76-52301		MAT,FLOOR	ﾏｯﾄ	1	
-	50A78-10311		MAT,FLOOR	ﾏｯﾄ	1	[FCK]
6	20A76-52311		MAT,FLOOR,LH	ﾏｯﾄ	1	
7	20A76-52321		MAT,FLOOR,RH	ﾏｯﾄ	1	

FIG.130 FRONT COVER (CLUTCH)

(F7Z16470) フロントカバー

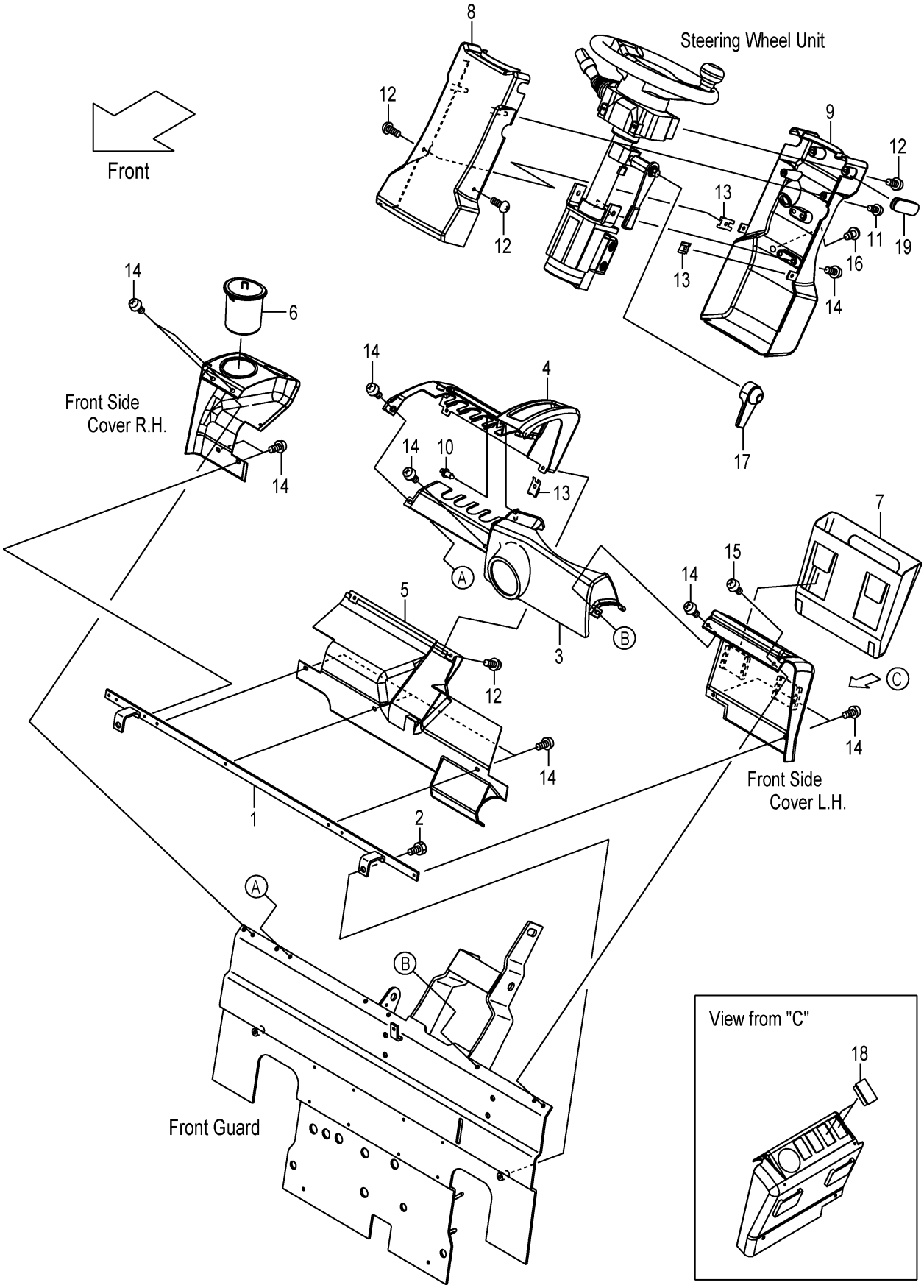

A:FHD15C3Z FHD18C3Z

Item No	Part No.	Mark	Description		Req'd	Remarks : Serial No.
1	20A76-42861		BRACKET,COVER	ﾌﾞﾗｹｯﾄ	1	
2	01185-08016		BOLT	ﾎﾞﾙﾄ	2	
3	22N56-42741		COVER,FRONT	ｶﾊﾞｰ	1	
4	22N56-42701		COVER,METER-PANEL	ｶﾊﾞｰ	1	
5	22N56-42731		COVER,LOWER	ｶﾊﾞｰ	1	
6	22N56-42761		CUP,HOLDER	ｶｯﾌﾟ	1	
7	22N56-42751		POCKET,BINDER	ﾎﾟｹｯﾄ	1	
8	22N54-12321		COVER,HANDLE,FRONT	ｶﾊﾞｰ	1	
9	22N54-12311		COVER,HANDLE,REAR	ｶﾊﾞｰ	1	
-	52N57-72001		COVER,HANDLE,REAR	ｶﾊﾞｰ	1	[SWD]
10	22N56-42791		RIVET,PUSH	ﾘﾍﾞｯﾄ	1	
11	222A2-42031		SCREW	ｽｸﾘｭ	2	
12	209K2-43001		SCREW	ｽｸﾘｭ	6	
13	281E6-42521		NUT,SPEED	ﾅｯﾄ	4	
14	225R6-42031		SCREW	ｽｸﾘｭ	14	
15	214A6-42771		SCREW	ｽｸﾘｭ	1	
16	281E6-42571		PLUG,HOLE	ﾌﾟﾗｸﾞ	1	
17	22N54-12201		COVER,TILT-LOCK	ｶﾊﾞｰ	1	
18	256T2-42121		CAP	ｷｬｯﾌﾟ	2	
19	239A4-12541		GROMMET,HANDLE-COVER	ｸﾞﾛﾒｯﾄ	1	

FIG.131 FRONT COVER (TOR-CON)

(F7Z16480) フロントカバー

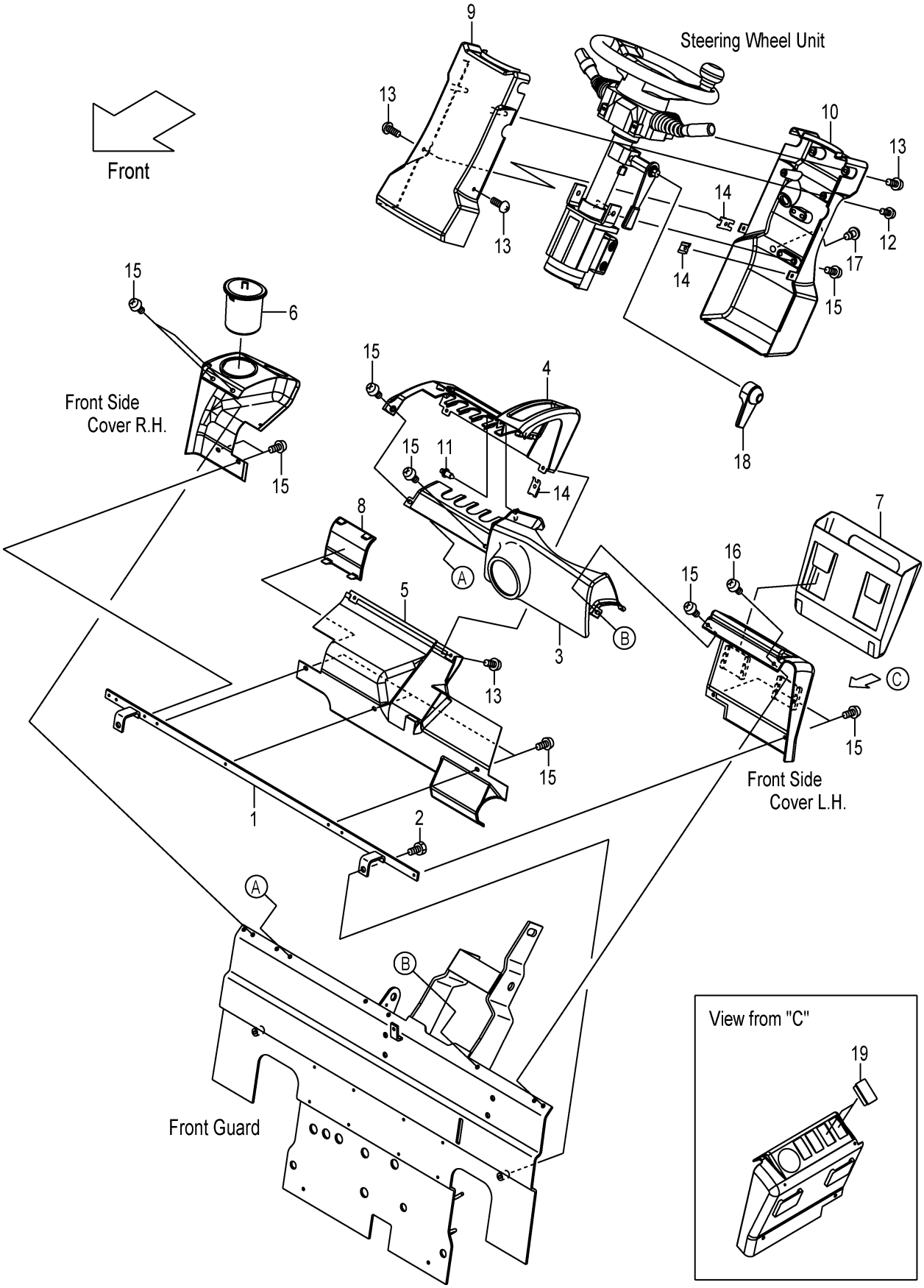

FIG.131

(F7Z16480)

A:FHD15T3Z FHD18T3Z

Item No	Part No.	Mark	Description		Req'd	Remarks : Serial No.
1	20A76-42861		BRACKET,COVER	ﾌﾞﾗｹｯﾄ	1	
2	01185-08016		BOLT	ﾎﾞﾙﾄ	2	
3	22N56-42741		COVER,FRONT	ｶﾊﾞｰ	1	
4	22N56-42701		COVER,METER-PANEL	ｶﾊﾞｰ	1	
5	22N56-42731		COVER,LOWER	ｶﾊﾞｰ	1	
6	22N56-42761		CUP,HOLDER	ｶｯﾌﾟ	1	
7	22N56-42751		POCKET,BINDER	ﾎﾟｹｯﾄ	1	
8	22N56-42771		COVER,CHANGE-LEVER	ｶﾊﾞｰ	1	
9	22N54-12321		COVER,HANDLE,FRONT	ｶﾊﾞｰ	1	
10	22N54-12311		COVER,HANDLE,REAR	ｶﾊﾞｰ	1	
-	52N57-72001		COVER,HANDLE,REAR	ｶﾊﾞｰ	1	[SWD]
11	22N56-42791		RIVET,PUSH	ﾘﾍﾞｯﾄ	1	
12	222A2-42031		SCREW	ｽｸﾘｭ	2	
13	209K2-43001		SCREW	ｽｸﾘｭ	6	
14	281E6-42521		NUT,SPEED	ﾅｯﾄ	4	
15	225R6-42031		SCREW	ｽｸﾘｭ	14	
16	214A6-42771		SCREW	ｽｸﾘｭ	1	
17	281E6-42571		PLUG,HOLE	ﾌﾟﾗｸﾞ	1	
18	22N54-12201		COVER,TILT-LOCK	ｶﾊﾞｰ	1	
19	256T2-42121		CAP	ｷｬｯﾌﾟ	2	

FIG.132 SIDE COVER

(F7Z164A0) サイドカバー

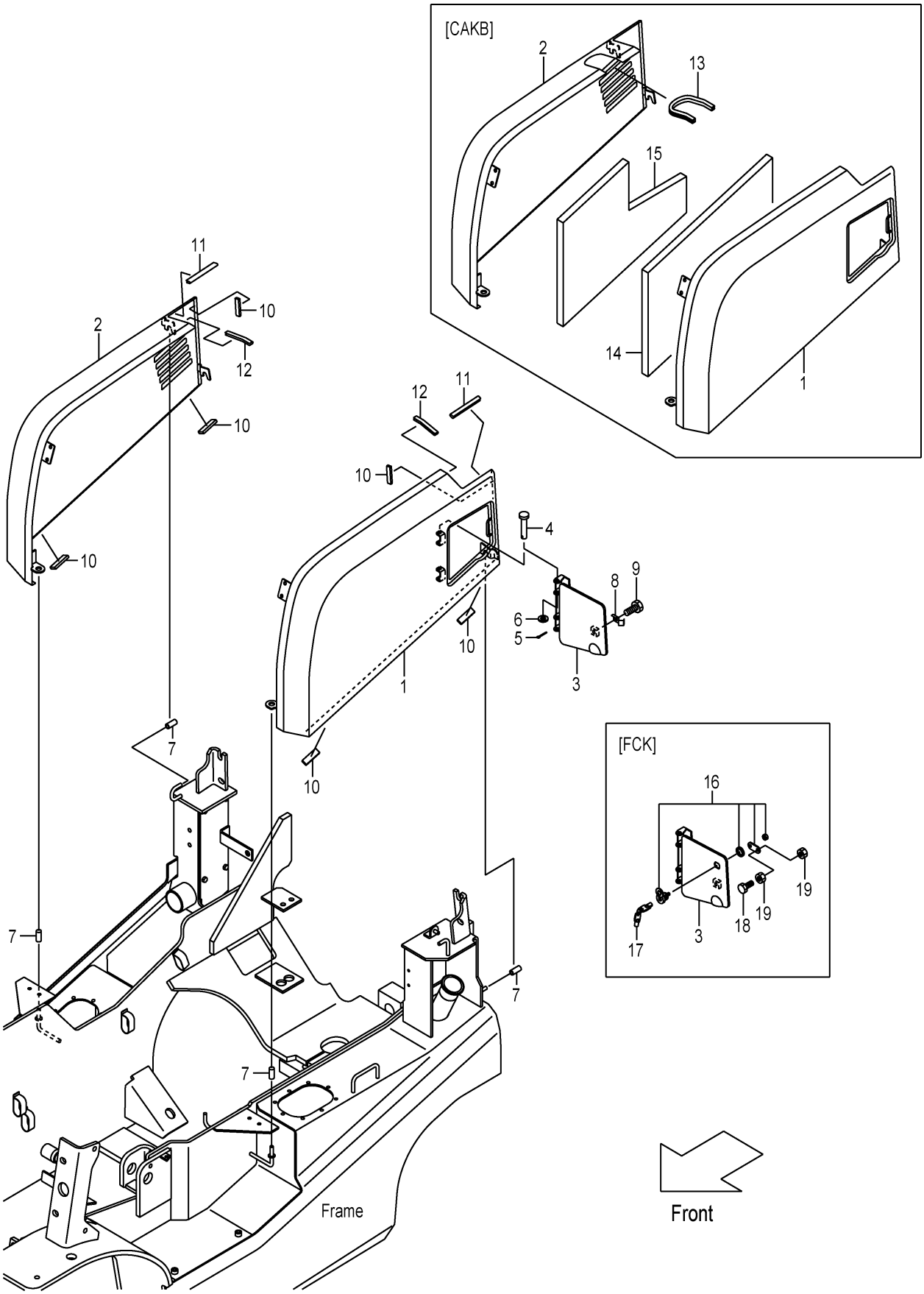

A:FHD15C3Z FHD15T3Z FHD18C3Z FHD18T3Z

Item No	Part No.	Mark	Description		Req'd	Remarks : Serial No.
1	20A76-40252		COVER,SIDE,LH	ｶﾊﾞｰ	1	
-	50A75-42611		COVER,SIDE,LH	ｶﾊﾞｰ	1	[AW061]
2	20A76-40262		COVER,SIDE,RH	ｶﾊﾞｰ	1	
-	50A70-90201		COVER,SIDE,RH	ｶﾊﾞｰ	1	[CAKB]
-	50A75-42601		COVER,SIDE,RH	ｶﾊﾞｰ	1	[AW061]
3	22N56-40272		COVER,FUEL-CAP	ｶﾊﾞｰ	1	
-	52N58-10221		COVER,FUEL-CAP	ｶﾊﾞｰ	1	[FCK]
4	02262-08045		PIN,CLEVIS	ﾋﾟﾝ	2	
5	02200-02020		PIN,COTTER	ﾋﾟﾝ	2	
6	02000-00008		WASHER	ﾜｯｼｬ	2	
7	216G6-52291		CAP	ｷｬｯﾌﾟ	6	
8	22N56-43252		SPRING,LEAF	ｽﾌﾟﾘﾝｸﾞ	1	
9	01183-08012		BOLT	ﾎﾞﾙﾄ	1	
10	22N56-43481		RUBBER	ﾗﾊﾞｰ	6	
-	22N56-43481		RUBBER	ﾗﾊﾞｰ	4	[CAKB]
11	243C6-42821		EDGING,L-100	ｴｯｼﾞﾝｸﾞ	2	
-	243C6-42811		EDGING,L-190	ｴｯｼﾞﾝｸﾞ	2	[CAKB]
12	243C6-42831		EDGING,L-80	ｴｯｼﾞﾝｸﾞ	2	
13	524W3-83091		EDGING,L-230	ｴｯｼﾞﾝｸﾞ	1	[CAKB]
14	22N56-40411		RUBBER,FOAM,LH	ﾗﾊﾞｰ	1	[CAKB]
15	22N56-40421		RUBBER,FOAM,RH	ﾗﾊﾞｰ	1	[CAKB]
A1	52N58-10301		LOCK-ASSY,COIN	ｺｲﾝﾛｯｸｱｯｾﾝ	1	[FCK] INC.16,17
16	52N58-12501		CYL,KEY	ｼﾘﾝﾀﾞ	1	[FCK]
17	52N58-12511		KEY	ｷｰ	1	[FCK](1SET=2PCS)
18	01100-05016		BOLT	ﾎﾞﾙﾄ	1	[FCK]
19	01400-00005		NUT	ﾅｯﾄ	2	[FCK]

FIG.133 FRONT SIDE COVER

(F7Z164C0) フロントサイドカバー

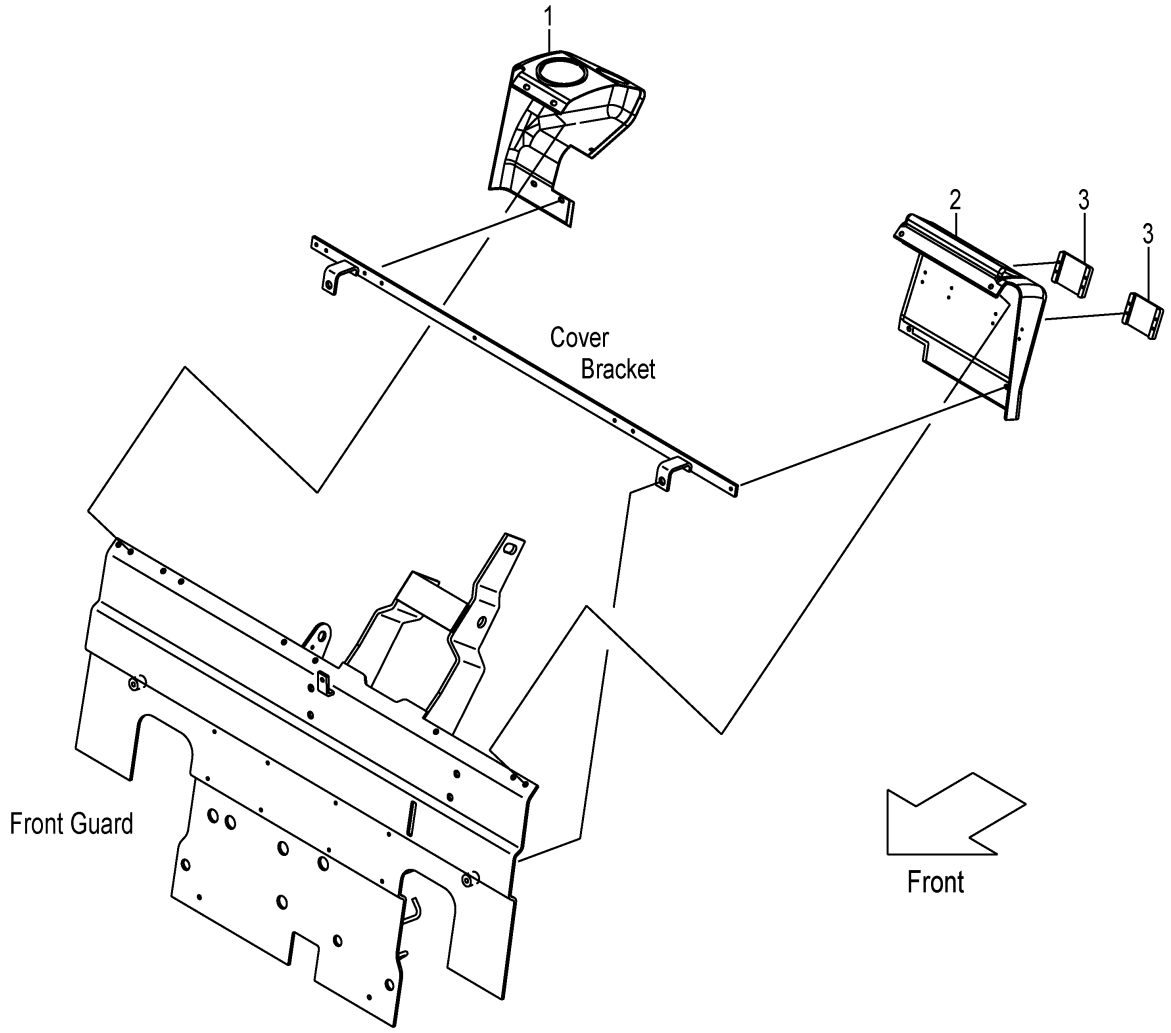

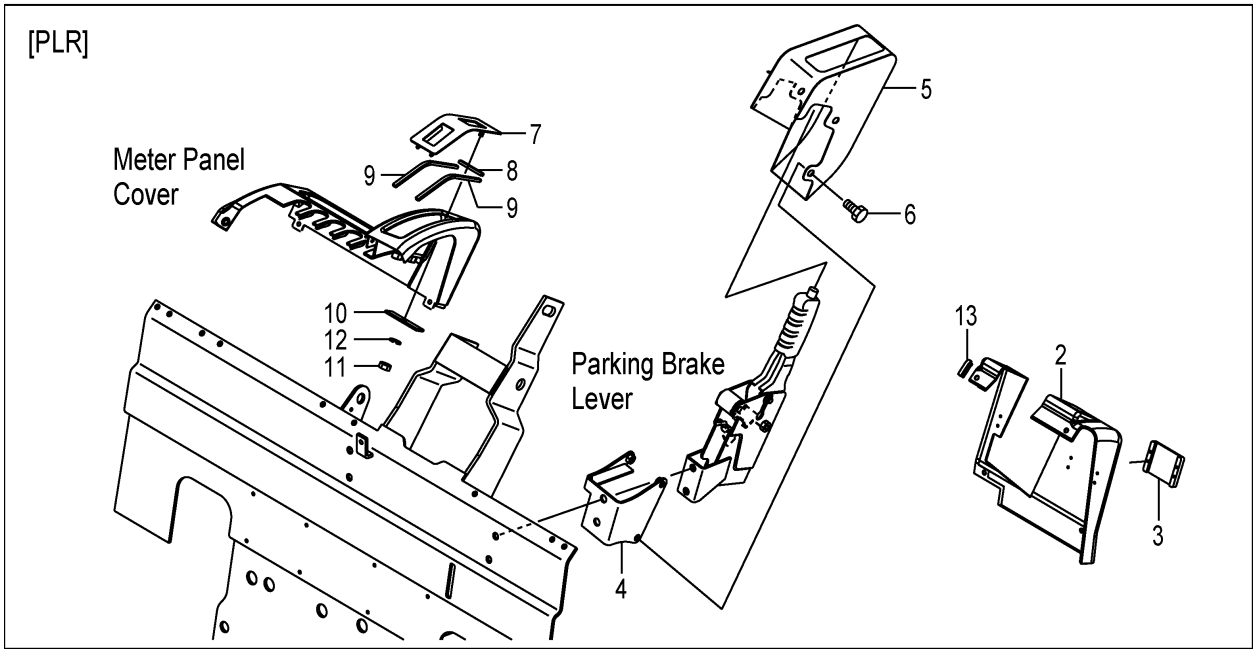

A:FHD15C3Z FHD15T3Z FHD18C3Z FHD18T3Z

Item No	Part No.	Mark	Description		Req'd	Remarks : Serial No.
1	20A76-42711		COVER,RH	ｶﾊﾞｰ	1	
-	50A78-82201		COVER,RH	ｶﾊﾞｰ	1	[AM][TTM]
A1	20A76-42852		COVER-ASSY,LH	ｶﾊﾞｰｱｯｾﾝ	1	INC.2,3
-	50A71-43022		COVER-ASSY,LH	ｶﾊﾞｰｱｯｾﾝ	1	[RWL/BB SW/AW071]
						[RWL/BBASW/AW071] INC.2,3
-	50A71-43032		COVER-ASSY,LH	ｶﾊﾞｰｱｯｾﾝ	1	[TPM][AM/TTM] INC.2,3
-	50A75-40412		COVER-ASSY,LH	ｶﾊﾞｰｱｯｾﾝ	1	[AW071/WAS071] INC.2,3
-	50A62-C3772		COVER-ASSY,LH	ｶﾊﾞｰｱｯｾﾝ	1	[PLR] INC.2,3
2	20A76-42722		COVER,LH	ｶﾊﾞｰ	1	
-	50A71-42202		COVER,LH	ｶﾊﾞｰ	1	[RWL/BB SW/AW071]
						[RWL/BBASW/AW071]
-	50A71-42212		COVER,LH	ｶﾊﾞｰ	1	[TPM][AM/TTM]
-	50A75-40081		COVER,LH	ｶﾊﾞｰ	1	[AW071/WAS071]
-	50A72-C3872		COVER,LH	ｶﾊﾞｰ	1	[PLR]
3	22N56-42811		COVER	ｶﾊﾞｰ	2	
-	22N56-42811		COVER	ｶﾊﾞｰ	1	[PLR]
4	52N52-C3801		BRACKET	ﾌﾞﾗｹｯﾄ	1	[PLR]
5	52N52-C3831		COVER,PLR	ｶﾊﾞｰ	1	[PLR]
6	01185-08016		BOLT	ﾎﾞﾙﾄ	3	[PLR]
7	52N52-C3881		COVER,PLR	ｶﾊﾞｰ	1	[PLR]
8	52N52-C3911		RUBBER	ﾗﾊﾞｰ	1	[PLR]
9	52N52-C3921		RUBBER	ﾗﾊﾞｰ	2	[PLR]
10	52N52-C3931		PLATE	ﾌﾟﾚｰﾄ	1	[PLR]
11	01400-00006		NUT	ﾅｯﾄ	1	[PLR]
12	02010-00006		WASHER	ﾜｯｼｬ	1	[PLR]
13	209P6-42831		EDGING,L-50	ｴｯｼﾞﾝｸﾞ	1	[PLR]

FIG.134 SEAT

(F7Z16810) シート

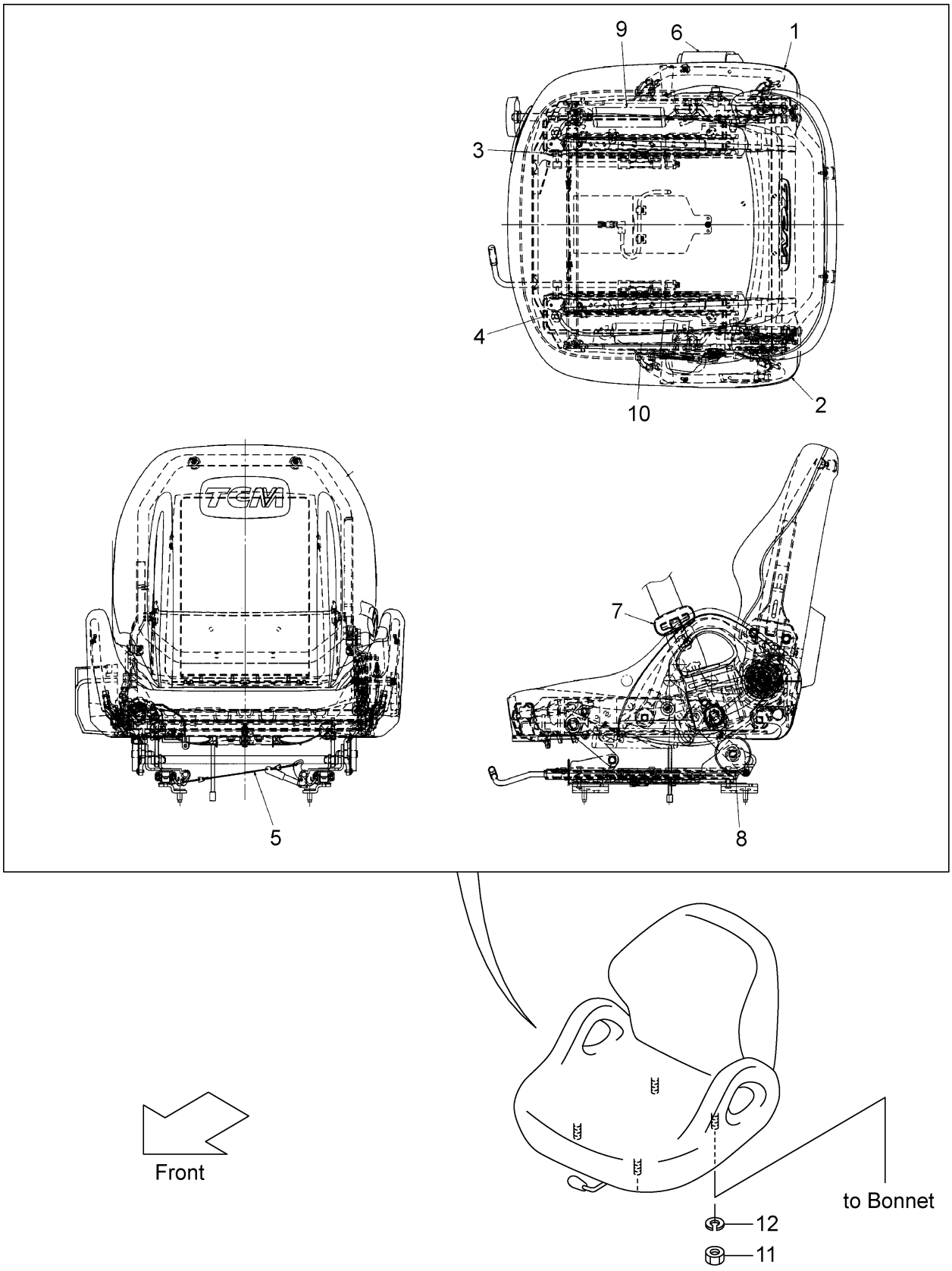

FIG.134

(F7Z16810)

A:FHD15C3Z FHD15T3Z FHD18C3Z FHD18T3Z

Item No	Part No.	Mark	Description		Req'd	Remarks : Serial No.
A1	242F6-80101		SEAT-ASSY	ｼｰﾄｱｯｾﾝ	1	INC.1-10
1	242F6-82041		SHIELD,RH	ｼｰﾙﾄﾞ	1	
2	242F6-82051		SHIELD,LH	ｼｰﾙﾄﾞ	1	
3	242F6-82081		TRACK,RH	ﾄﾗｯｸ	1	
4	242F6-82091		TRACK,LH	ﾄﾗｯｸ	1	
5	242F6-82101		WIRE	ﾜｲﾔ	1	
6	242F6-82111		BELT,SEAT,OUTER	ﾍﾞﾙﾄ	1	
7	242F6-82121		BELT,SEAT,INNER	ﾍﾞﾙﾄ	1	
8	242F6-82141		ABSORBER,SUSPENSION	ｱﾌﾞｿｰﾊﾞ	2	
9	242F6-82271		SPRING,TENSION	ｽﾌﾟﾘﾝｸﾞ	1	
10	242F6-82281		SPRING,TENSION	ｽﾌﾟﾘﾝｸﾞ	1	
11	01400-00008		NUT	ﾅｯﾄ	4	
12	02010-00008		WASHER	ﾜｯｼｬ	4	

FIG.135 SEAT [HGL]

(F7Z16820) シート

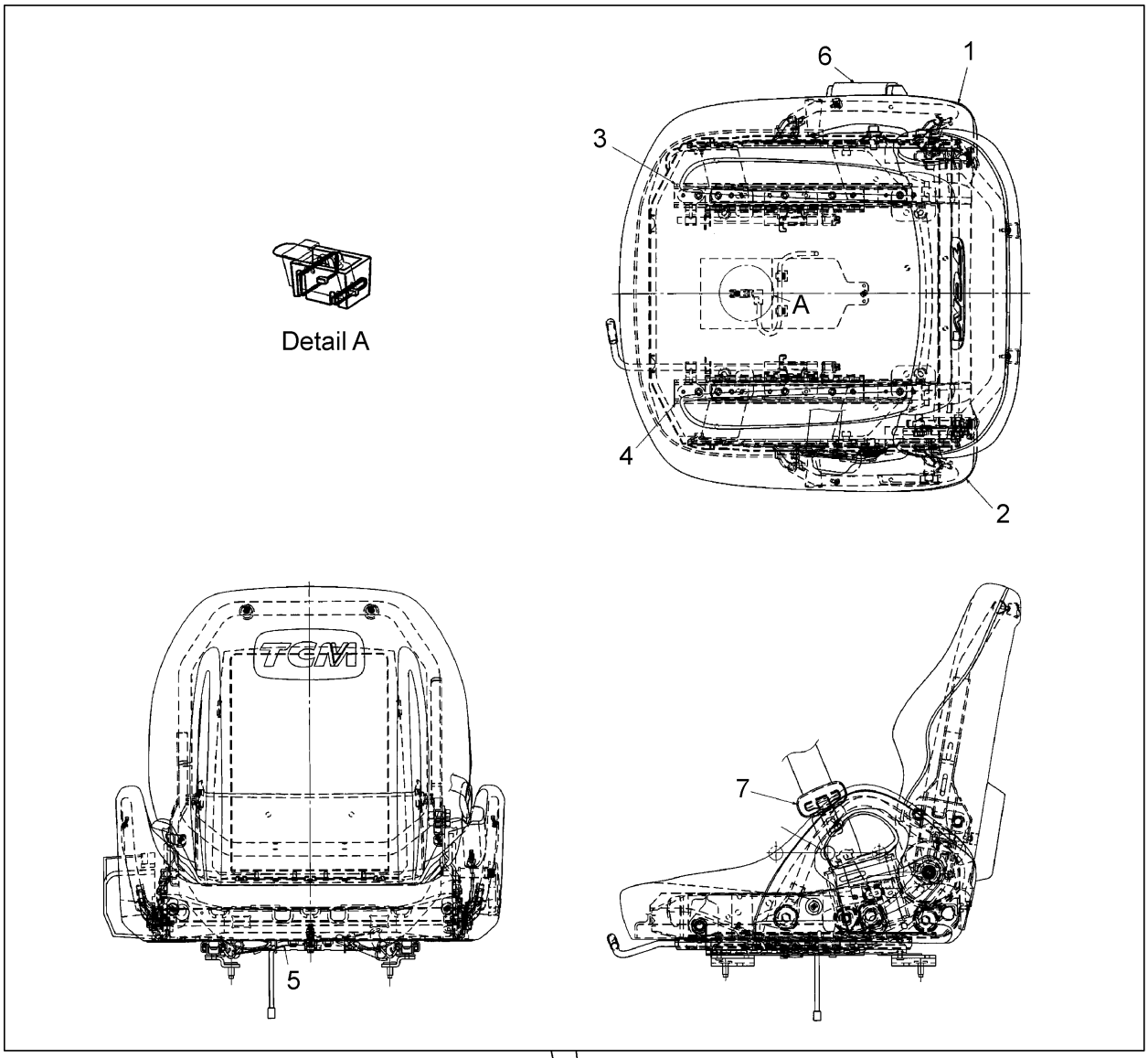

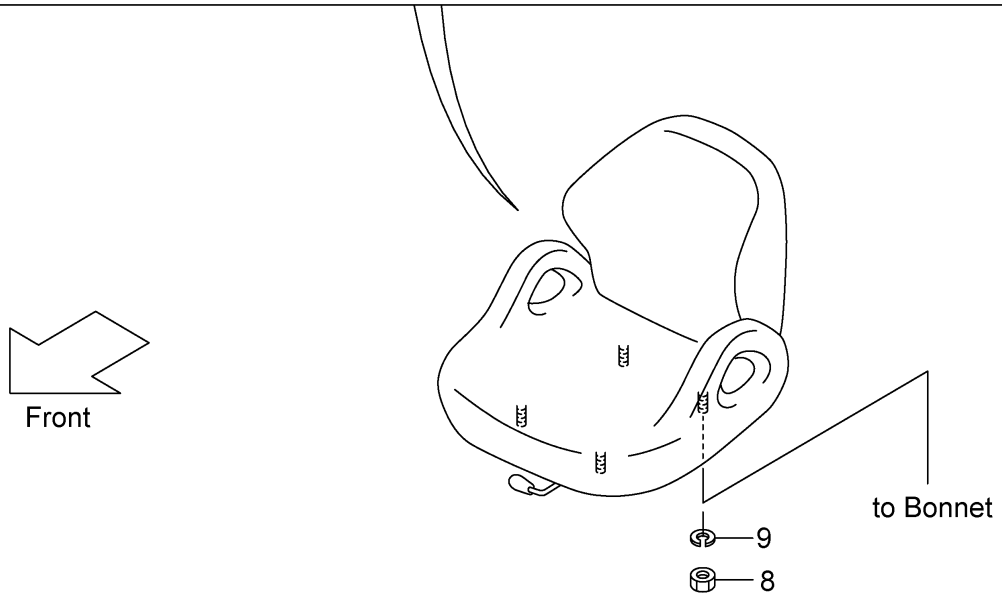

FIG.135

(F7Z16820)

A:FHD15C3Z FHD15T3Z FHD18C3Z FHD18T3Z

Item No	Part No.	Mark	Description		Req'd	Remarks : Serial No.
A1	242F6-80201		SEAT-ASSY	ｼｰﾄｱｯｾﾝ	1	[HGL] INC.1-7
1	242F6-82041		SHIELD,RH	ｼｰﾙﾄﾞ	1	[HGL]
2	242F6-82051		SHIELD,LH	ｼｰﾙﾄﾞ	1	[HGL]
3	242F6-82361		TRACK,RH	ﾄﾗｯｸ	1	[HGL]
4	242F6-82371		TRACK,LH	ﾄﾗｯｸ	1	[HGL]
5	242F6-82101		WIRE	ﾜｲﾔ	1	[HGL]
6	242F6-82111		BELT,SEAT,OUTER	ﾍﾞﾙﾄ	1	[HGL]
7	242F6-82121		BELT,SEAT,INNER	ﾍﾞﾙﾄ	1	[HGL]
8	01400-00008		NUT	ﾅｯﾄ	4	[HGL]
9	02010-00008		WASHER	ﾜｯｼｬ	4	[HGL]

FIG.136 SEAT [SIL]

(F7Z16830) シート

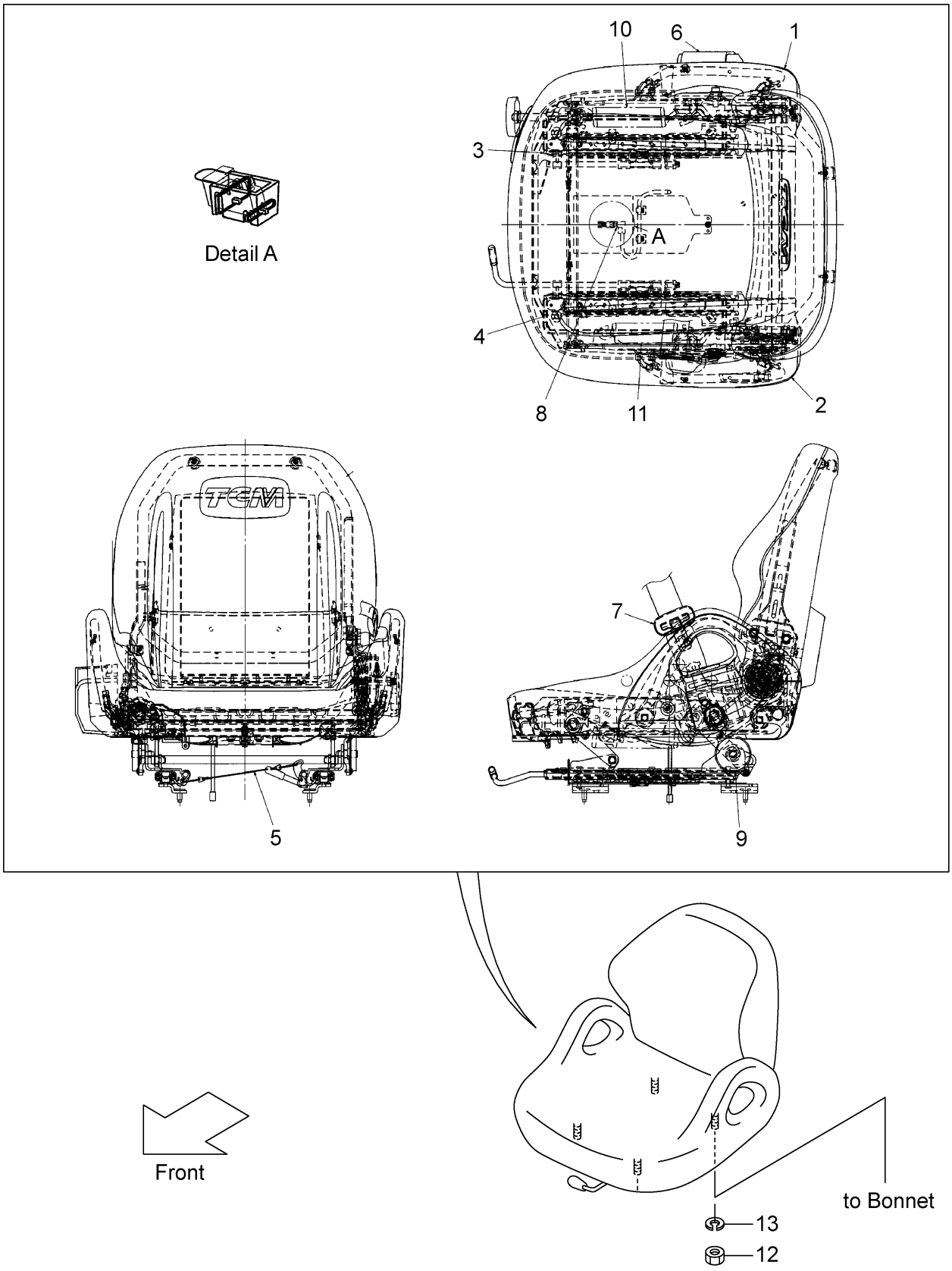

A:FHD15C3Z FHD15T3Z FHD18C3Z FHD18T3Z

Item No	Part No.	Mark	Description		Req'd	Remarks : Serial No.
A1	542F3-80101		SEAT-ASSY	ｼｰﾄｱｯｾﾝ	1	[SIL] INC.1-11
1	242F6-82041		SHIELD,RH	ｼｰﾙﾄﾞ	1	[SIL]
2	242F6-82051		SHIELD,LH	ｼｰﾙﾄﾞ	1	[SIL]
3	242F6-82081		TRACK,RH	ﾄﾗｯｸ	1	[SIL]
4	242F6-82091		TRACK,LH	ﾄﾗｯｸ	1	[SIL]
5	242F6-82101		WIRE	ﾜｲﾔ	1	[SIL]
6	242F6-82111		BELT,SEAT,OUTER	ﾍﾞﾙﾄ	1	[SIL]
7	242F6-82121		BELT,SEAT,INNER	ﾍﾞﾙﾄ	1	[SIL]
8	542F3-82011		SWITCH,SEAT	ｽｲｯﾁ	1	[SIL]
9	242F6-82141		ABSORBER,SUSPENSION	ｱﾌﾞｿｰﾊﾞ	2	[SIL]
10	242F6-82271		SPRING,TENSION	ｽﾌﾟﾘﾝｸﾞ	1	[SIL]
11	242F6-82281		SPRING,TENSION	ｽﾌﾟﾘﾝｸﾞ	1	[SIL]
12	01400-00008		NUT	ﾅｯﾄ	4	[SIL]
13	02010-00008		WASHER	ﾜｯｼｬ	4	[SIL]

FIG.137 SEAT [OKM][OKM/SIL]

(F7Z16840) シート

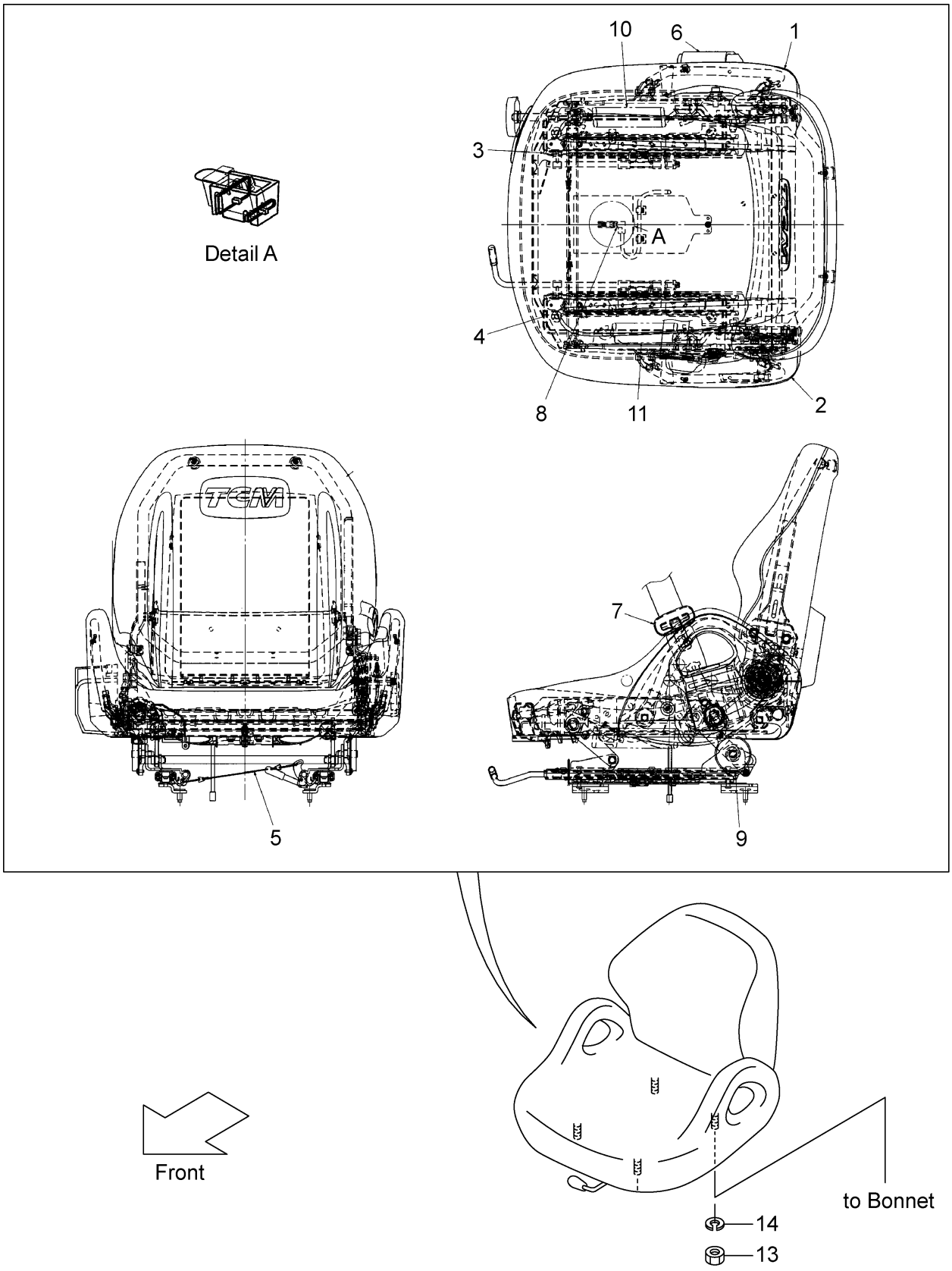

FIG.137

(F7Z16840)

A:FHD15C3Z FHD15T3Z FHD18C3Z FHD18T3Z

Item No	Part No.	Mark	Description		Req'd	Remarks : Serial No.
A1	52N56-22201		SEAT-ASSY	ｼｰﾄｱｯｾﾝ	1	[OKM][OKM/SIL] INC.1-12
1	242F6-82041		SHIELD,RH	ｼｰﾙﾄﾞ	1	[OKM][OKM/SIL]
2	242F6-82051		SHIELD,LH	ｼｰﾙﾄﾞ	1	[OKM][OKM/SIL]
3	242F6-82081		TRACK,RH	ﾄﾗｯｸ	1	[OKM][OKM/SIL]
4	242F6-82091		TRACK,LH	ﾄﾗｯｸ	1	[OKM][OKM/SIL]
5	242F6-82101		WIRE	ﾜｲﾔ	1	[OKM][OKM/SIL]
6	242F6-82111		BELT,SEAT,OUTER	ﾍﾞﾙﾄ	1	[OKM][OKM/SIL]
7	242F6-82121		BELT,SEAT,INNER	ﾍﾞﾙﾄ	1	[OKM][OKM/SIL]
8	542F3-82011		SWITCH,SEAT	ｽｲｯﾁ	1	[OKM][OKM/SIL]
9	242F6-82141		ABSORBER,SUSPENSION	ｱﾌﾞｿｰﾊﾞ	2	[OKM][OKM/SIL]
10	242F6-82271		SPRING,TENSION	ｽﾌﾟﾘﾝｸﾞ	1	[OKM][OKM/SIL]
11	242F6-82281		SPRING,TENSION	ｽﾌﾟﾘﾝｸﾞ	1	[OKM][OKM/SIL]
12	NO PART NO.	+	SWITCH,SEAT-BELT	ｽｲｯﾁ	1	[OKM][OKM/SIL]
13	01400-00008		NUT	ﾅｯﾄ	4	[OKM][OKM/SIL]
14	02010-00008		WASHER	ﾜｯｼｬ	4	[OKM][OKM/SIL]

FIG.138 PUMP UNIT

(F7Z17120) ﾎﾟﾝﾌﾟﾕﾆｯﾄ

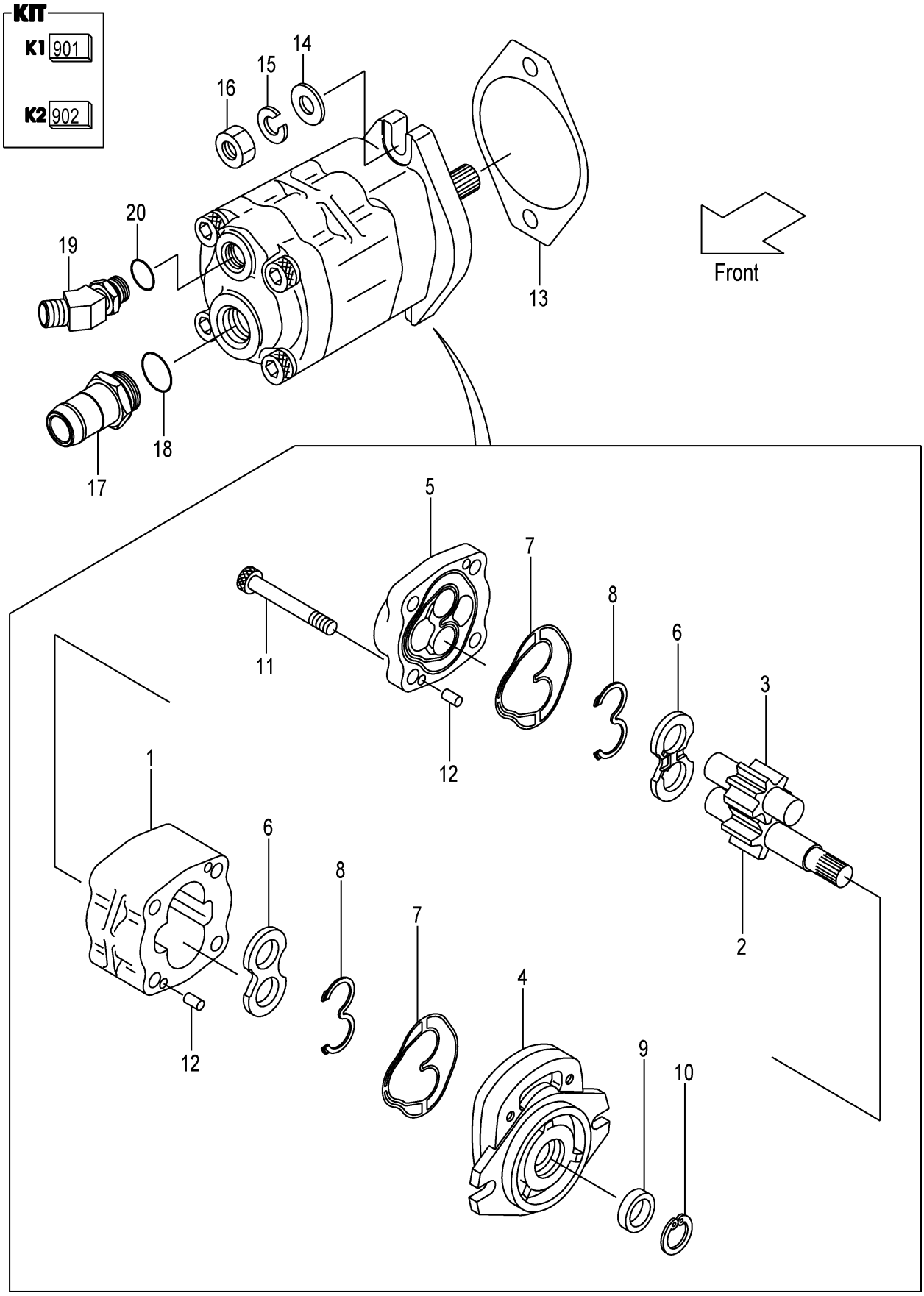

A:FHD15C3Z FHD15T3Z FHD18C3Z FHD18T3Z

Item No	Part No.	Mark	Description		Req'd	Remarks : Serial No.
A1	10L77-10201		PUMP-ASSY,GEAR	ｷﾞｬｰﾎﾟﾝﾌﾟｱｯｾﾝ	1	INC.1-12
901	114A7-12001	K1	KIT,REPAIR	ﾘﾍﾟｱｷｯﾄ	1	INC.7-10
902	10A77-12001	K2	SET,GEAR	ｷﾞｬｰｾｯﾄ	1	INC.2,3
1	NO PART NO.	#	PLATE,GEAR	ﾌﾟﾚｰﾄ	1	
2	NO PART NO.	#*	GEAR,DRIVE	ｷﾞｬｰ	1	
3	NO PART NO.	#*	GEAR,DRIVEN	ｷﾞｬｰ	1	
4	NO PART NO.	#	FLANGE,MOUNTING	ﾌﾗﾝｼﾞ	1	
5	NO PART NO.	#	COVER	ｶﾊﾞｰ	1	
6	NO PART NO.	#	PLATE,SIDE	ﾌﾟﾚｰﾄ	2	
7	NO PART NO.	#*	SEAL,PLATE	ｼｰﾙ	2	
8	NO PART NO.	#*	BACK-UP	ﾊﾞｯｸｱｯﾌﾟ	2	
9	NO PART NO.	#*	SEAL,OIL	ｼｰﾙ	1	
10	NO PART NO.	#*	RING,SNAP	ｽﾅｯﾌﾟﾘﾝｸﾞ	1	
11	10A77-12041		BOLT	ﾎﾞﾙﾄ	4	
12	NO PART NO.	#	PIN,DOWEL	ﾋﾟﾝ	4	
13	23657-12002		PACKING	ﾊﾟｯｷﾝｸﾞ	1	
14	02000-00010		WASHER	ﾜｯｼｬ	2	
15	02010-00010		WASHER	ﾜｯｼｬ	2	
16	01402-00010		NUT	ﾅｯﾄ	2	
A2	225A7-62021		NIPPLE-ASSY	ﾆｯﾌﾟﾙｱｯｾﾝ	1	INC.17,18
17	NO PART NO.	#	NIPPLE	ﾆｯﾌﾟﾙ	1	
18	03320-00290		O-RING	Oﾘﾝｸﾞ	1	
A3	216M7-62101		ADAPTER-ASSY	ｱﾀﾞﾌﾟﾀｱｯｾﾝ	1	INC.19,20
19	NO PART NO.	#	ADAPTER	ｱﾀﾞﾌﾟﾀ	1	
20	03320-00180		O-RING	Oﾘﾝｸﾞ	1	

FIG.139 CONTROL VALVE

(F7Z17310) コントロールバルブ

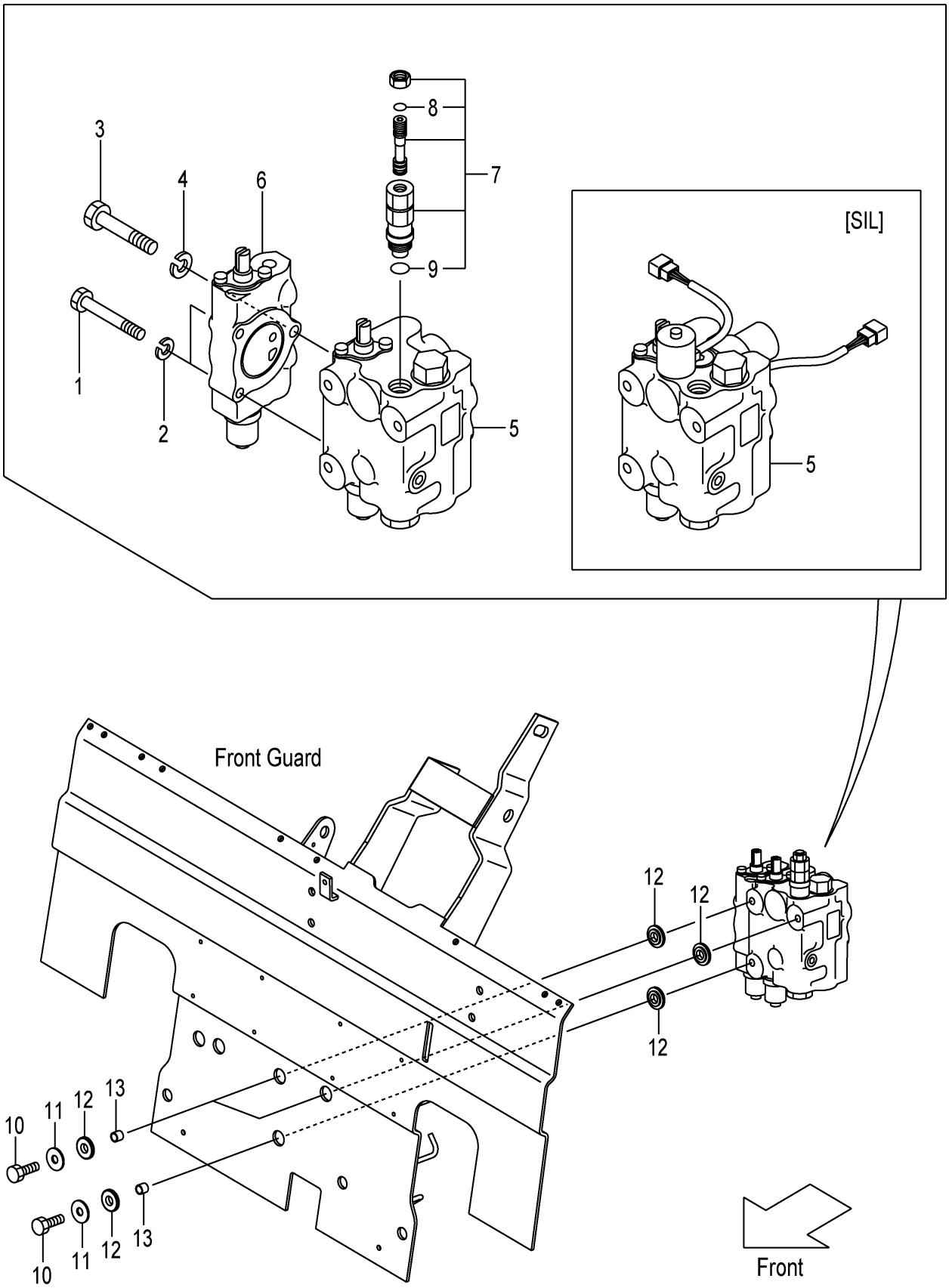

A:FHD15C3Z FHD15T3Z FHD18C3Z FHD18T3Z

Item No	Part No.	Mark	Description		Req'd	Remarks : Serial No.
A1	20A77-30321		VALVE-ASSY,CONTROL	ｺﾝﾄﾛｰﾙﾊﾞﾙﾌﾞｱｯｾﾝ	1	INC.1-9
-	50A74-60321		VALVE-ASSY,CONTROL	ｺﾝﾄﾛｰﾙﾊﾞﾙﾌﾞｱｯｾﾝ	1	[VLS] INC.1-9
-	50A76-70321		VALVE-ASSY,CONTROL	ｺﾝﾄﾛｰﾙﾊﾞﾙﾌﾞｱｯｾﾝ	1	[VLL][SIL][TLH] INC.1-9
1	B-T1111-08101		BOLT	ﾎﾞﾙﾄ	2	
2	B-94341-08162		WASHER	ﾜｯｼｬ	2	
3	B-T1111-10101		BOLT	ﾎﾞﾙﾄ	1	
4	B-94341-10202		WASHER	ﾜｯｼｬ	1	
5	B-C0213-31013		SECTION,SPOOL,LIFT	ｽﾌﾟｰﾙｾｸｼｮﾝ	1	SEE FIG.157
-	B-C0213-31033		SECTION,SPOOL,LIFT	ｽﾌﾟｰﾙｾｸｼｮﾝ	1	[VLS]SEE FIG.159
-	B-C0213-31026		SECTION,SPOOL,LIFT	ｽﾌﾟｰﾙｾｸｼｮﾝ	1	[VLL][SIL][TLH]SEE FIG.157
6	B-C0213-31272		SECTION,SPOOL,TILT	ｽﾌﾟｰﾙｾｸｼｮﾝ	1	SEE FIG.160
-	B-C0213-31276		SECTION,SPOOL,TILT	ｽﾌﾟｰﾙｾｸｼｮﾝ	1	[VLS]SEE FIG.162
7	63130-25614		VALVE,MAIN-RELIEF	ﾊﾞﾙﾌﾞ	1	INC.8,9
8	B-21001-00036	*	O-RING	Oﾘﾝｸﾞ	1	
9	B-95113-01000	*	O-RING	Oﾘﾝｸﾞ	1	
10	22N57-32041		BOLT	ﾎﾞﾙﾄ	3	
11	216G7-32021		WASHER,PLANE	ﾜｯｼｬ	3	
12	22N57-42201		RUBBER,VALVE	ﾗﾊﾞｰ	6	
13	22N57-42211		COLLAR	ｶﾗｰ	3	

FIG.140 CONTROL VALVE [3SV]

(F7Z17320) コントロールバルブ

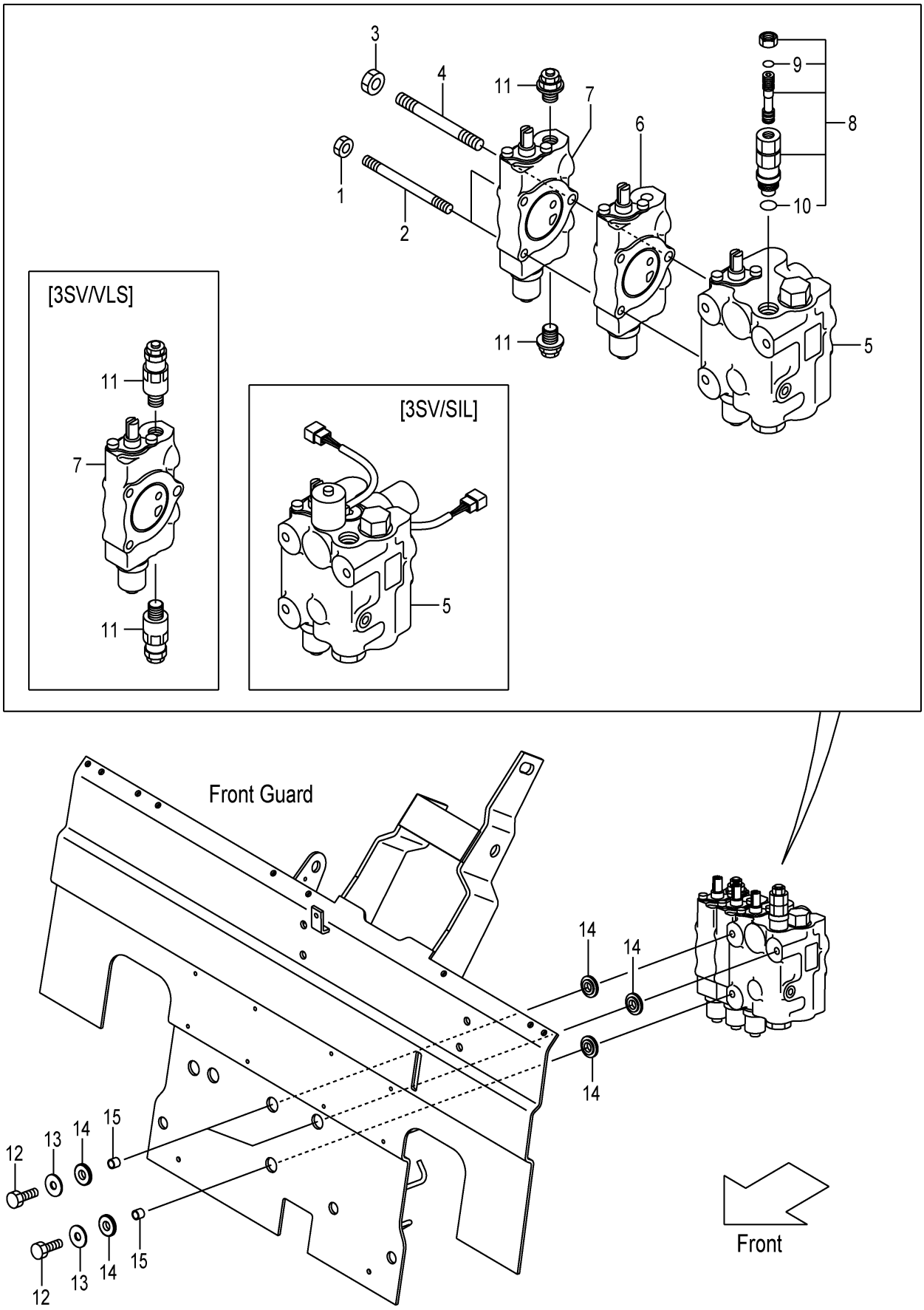

A:FHD15C3Z FHD15T3Z FHD18C3Z FHD18T3Z

Item No	Part No.	Mark	Description		Req'd	Remarks : Serial No.
A1	20A77-30331		VALVE-ASSY,CONTROL	ｺﾝﾄﾛｰﾙﾊﾞﾙﾌﾞｱｯｾﾝ	1	[3SV] INC.1-11
-	50A74-60331		VALVE-ASSY,CONTROL	ｺﾝﾄﾛｰﾙﾊﾞﾙﾌﾞｱｯｾﾝ	1	[3SV/VLS] INC.1-11
-	50A76-70331		VALVE-ASSY,CONTROL	ｺﾝﾄﾛｰﾙﾊﾞﾙﾌﾞｱｯｾﾝ	1	[3SV/VLL][3SV/SIL][3SV/TLH] INC.1-11
1	B-93118-08652		NUT	ﾅｯﾄ	2	[3SV]
2	B-T1121-08107		ROD,TIE	ﾛｯﾄﾞ	2	[3SV]
3	B-93128-10082		NUT	ﾅｯﾄ	1	[3SV]
4	B-T1121-10111		ROD,TIE	ﾛｯﾄﾞ	1	[3SV]
5	B-C0213-31013		SECTION,SPOOL,LIFT	ｽﾌﾟｰﾙｾｸｼｮﾝ	1	[3SV]SEE FIG.157
-	B-C0213-31033		SECTION,SPOOL,LIFT	ｽﾌﾟｰﾙｾｸｼｮﾝ	1	[3SV/VLS]SEE FIG.159
-	B-C0213-31026		SECTION,SPOOL,LIFT	ｽﾌﾟｰﾙｾｸｼｮﾝ	1	[3SV/VLL][3SV/SIL][3SV/TLH] SEE FIG.157
6	B-C0213-31259		SECTION,SPOOL,TILT	ｽﾌﾟｰﾙｾｸｼｮﾝ	1	[3SV]SEE FIG.160
-	B-C0213-31275		SECTION,SPOOL,TILT	ｽﾌﾟｰﾙｾｸｼｮﾝ	1	[3SV/VLS]SEE FIG.162
7	B-C0213-31260		SECTION,SPOOL,ATT	ｽﾌﾟｰﾙｾｸｼｮﾝ	1	[3SV]SEE FIG.163
8	63130-25614		VALVE,MAIN-RELIEF	ﾊﾞﾙﾌﾞ	1	[3SV] INC.9,10
9	B-21001-00036	*	O-RING	Oﾘﾝｸﾞ	1	[3SV]
10	B-95113-01000	*	O-RING	Oﾘﾝｸﾞ	1	[3SV]
11	B-C0003-30301		VALVE,SHUT-OFF	ﾊﾞﾙﾌﾞ	2	[3SV]
-	B-21013-30697		VALVE,RELIEF	ﾊﾞﾙﾌﾞ	2	[3SV/VLS]
12	22N57-32041		BOLT	ﾎﾞﾙﾄ	3	[3SV]
13	216G7-32021		WASHER,PLANE	ﾜｯｼｬ	3	[3SV]
14	22N57-42201		RUBBER,VALVE	ﾗﾊﾞｰ	6	[3SV]
15	22N57-42211		COLLAR	ｶﾗｰ	3	[3SV]

FIG.141 CONTROL VALVE [4SV]

(F7Z17330) コントロールバルブ

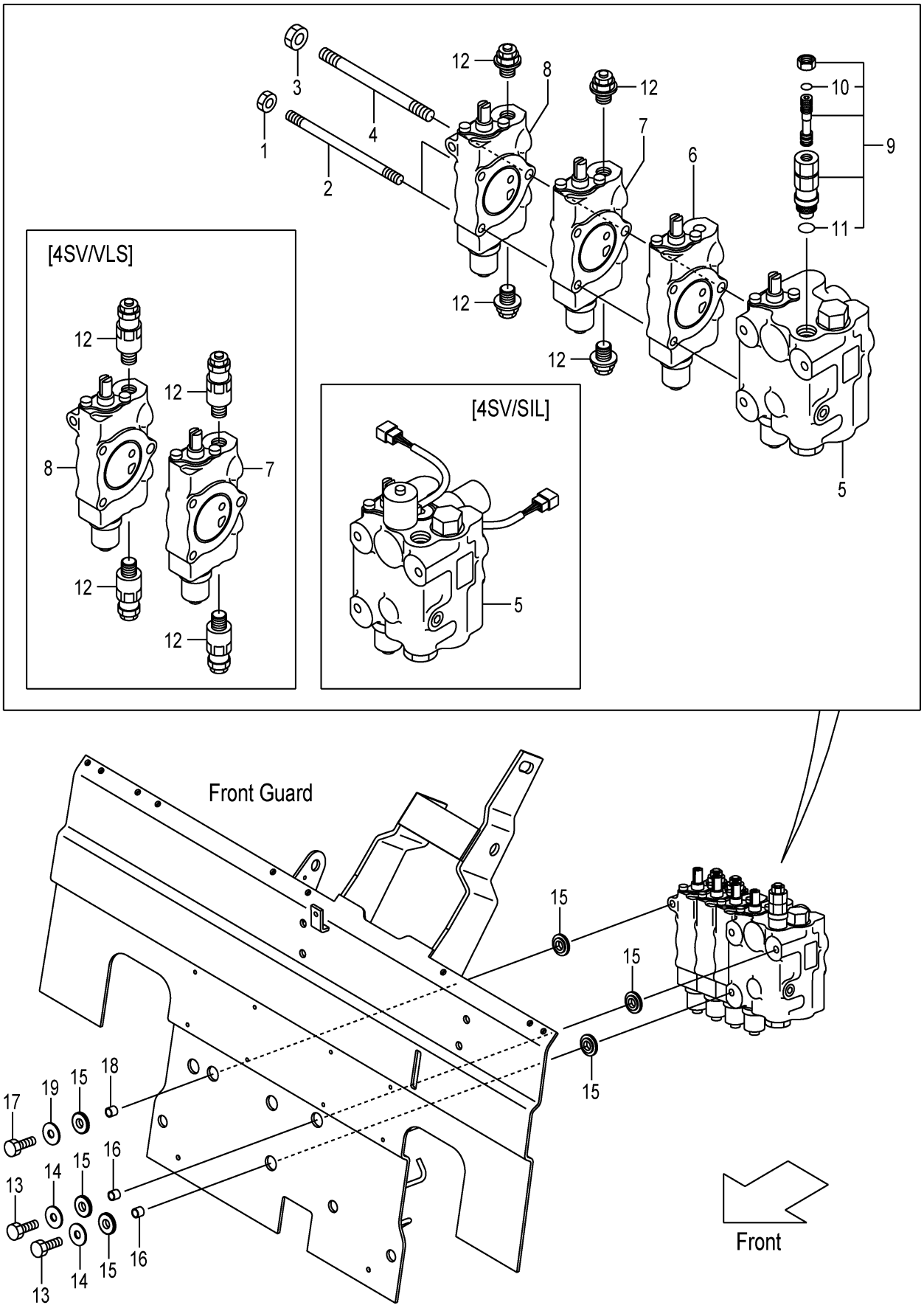

A:FHD15C3Z FHD15T3Z FHD18C3Z FHD18T3Z

Item No	Part No.	Mark	Description		Req'd	Remarks : Serial No.
A1	20A77-30341		VALVE-ASSY,CONTROL	ｺﾝﾄﾛｰﾙﾊﾞﾙﾌﾞｱｯｾﾝ	1	[4SV] INC.1-12
-	50A74-60341		VALVE-ASSY,CONTROL	ｺﾝﾄﾛｰﾙﾊﾞﾙﾌﾞｱｯｾﾝ	1	[4SV/VLS] INC.1-12
-	50A76-70341		VALVE-ASSY,CONTROL	ｺﾝﾄﾛｰﾙﾊﾞﾙﾌﾞｱｯｾﾝ	1	[4SV/VLL][4SV/SIL][4SV/TLH] INC.1-12
1	B-93118-08652		NUT	ﾅｯﾄ	2	[4SV]
2	B-T1121-08108		ROD,TIE	ﾛｯﾄﾞ	2	[4SV]
3	B-93128-10082		NUT	ﾅｯﾄ	1	[4SV]
4	B-T1121-10112		ROD,TIE	ﾛｯﾄﾞ	1	[4SV]
5	B-C0213-31013		SECTION,SPOOL,LIFT	ｽﾌﾟｰﾙｾｸｼｮﾝ	1	[4SV]SEE FIG.157
-	B-C0213-31033		SECTION,SPOOL,LIFT	ｽﾌﾟｰﾙｾｸｼｮﾝ	1	[4SV/VLS]SEE FIG.159
-	B-C0213-31026		SECTION,SPOOL,LIFT	ｽﾌﾟｰﾙｾｸｼｮﾝ	1	[4SV/VLL][4SV/SIL][4SV/TLH] SEE FIG.157
6	B-C0213-31259		SECTION,SPOOL,TILT	ｽﾌﾟｰﾙｾｸｼｮﾝ	1	[4SV]SEE FIG.160
-	B-C0213-31275		SECTION,SPOOL,TILT	ｽﾌﾟｰﾙｾｸｼｮﾝ	1	[4SV/VLS]SEE FIG.162
7	B-C0213-31273		SECTION,SPOOL,ATT	ｽﾌﾟｰﾙｾｸｼｮﾝ	1	[4SV]SEE FIG.163
8	B-C0213-31274		SECTION,SPOOL,ATT	ｽﾌﾟｰﾙｾｸｼｮﾝ	1	[4SV]SEE FIG.164
9	63130-25614		VALVE,MAIN-RELIEF	ﾊﾞﾙﾌﾞ	1	[4SV] INC.10,11
10	B-21001-00036	*	O-RING	Oﾘﾝｸﾞ	1	[4SV]
11	B-95113-01000	*	O-RING	Oﾘﾝｸﾞ	1	[4SV]
12	B-C0003-30301		VALVE,SHUT-OFF	ﾊﾞﾙﾌﾞ	4	[4SV]
-	B-21013-30697		VALVE,RELIEF	ﾊﾞﾙﾌﾞ	4	[4SV/VLS]
13	22N57-32041		BOLT	ﾎﾞﾙﾄ	2	[4SV]
14	216G7-32021		WASHER,PLANE	ﾜｯｼｬ	2	[4SV]
15	22N57-42201		RUBBER,VALVE	ﾗﾊﾞｰ	6	[4SV]
16	22N57-42211		COLLAR	ｶﾗｰ	2	[4SV]
17	20A77-32001		BOLT	ﾎﾞﾙﾄ	1	[4SV]
18	20A77-32011		COLLAR	ｶﾗｰ	1	[4SV]
19	124T3-43041		PLATE	ﾌﾟﾚｰﾄ	1	[4SV]

FIG.142 CONTROL VALVE [5SV]

(F7Z17340) コントロールバルブ

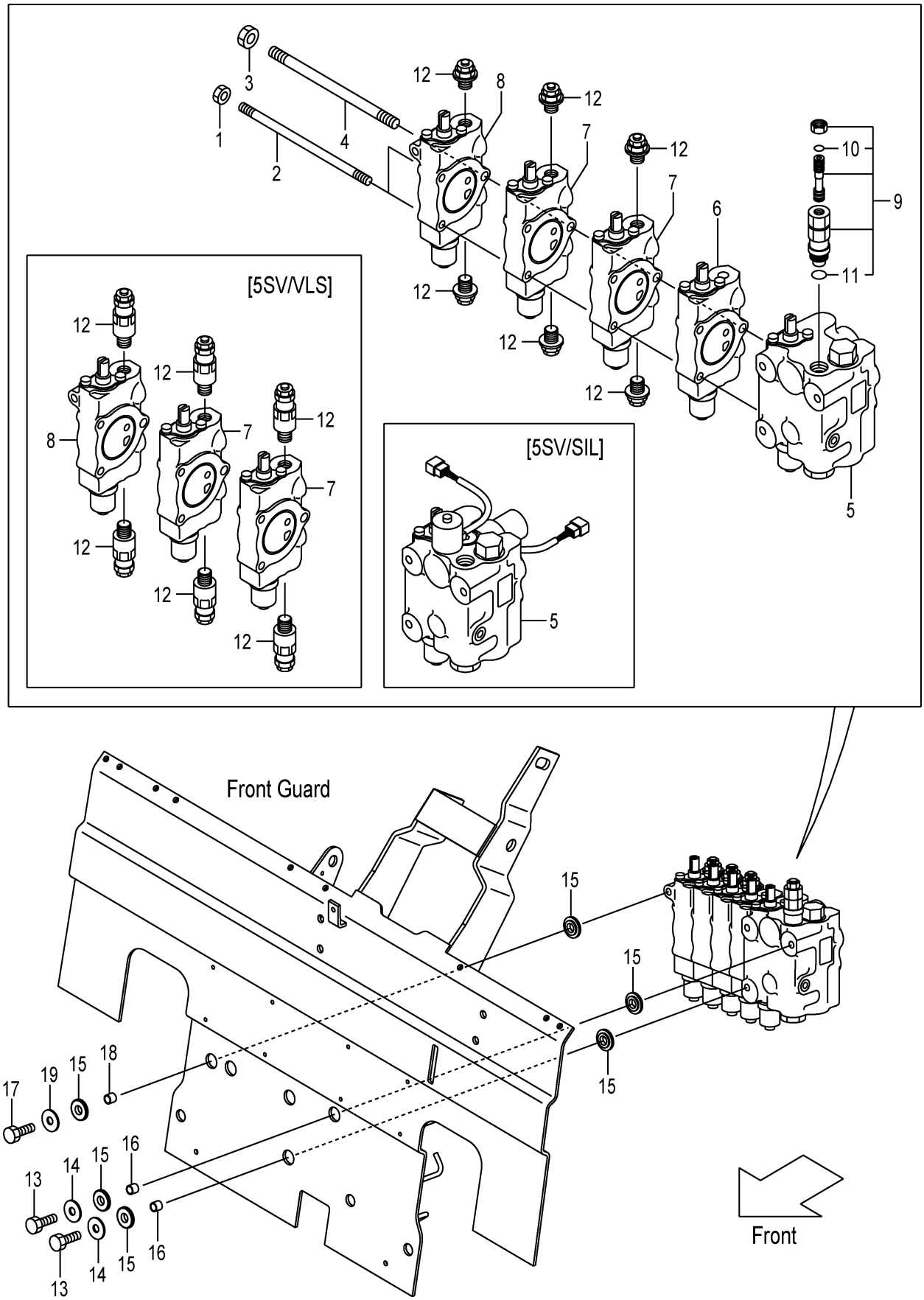

A:FHD15C3Z FHD15T3Z FHD18C3Z FHD18T3Z

Item No	Part No.	Mark	Description		Req'd	Remarks : Serial No.
A1	20A77-30351		VALVE-ASSY,CONTROL	ｺﾝﾄﾛｰﾙﾊﾞﾙﾌﾞｱｯｾﾝ	1	[5SV] INC.1-12
-	50A74-60351		VALVE-ASSY,CONTROL	ｺﾝﾄﾛｰﾙﾊﾞﾙﾌﾞｱｯｾﾝ	1	[5SV/VLS] INC.1-12
-	50A76-70351		VALVE-ASSY,CONTROL	ｺﾝﾄﾛｰﾙﾊﾞﾙﾌﾞｱｯｾﾝ	1	[5SV/VLL][5SV/SIL][5SV/TLH] INC.1-12
1	B-93118-08652		NUT	ﾅｯﾄ	2	[5SV]
2	B-T1121-08110		ROD,TIE	ﾛｯﾄﾞ	2	[5SV]
3	B-93128-10082		NUT	ﾅｯﾄ	1	[5SV]
4	B-T1121-10113		ROD,TIE	ﾛｯﾄﾞ	1	[5SV]
5	B-C0213-31013		SECTION,SPOOL,LIFT	ｽﾌﾟｰﾙｾｸｼｮﾝ	1	[5SV]SEE FIG.157
-	B-C0213-31033		SECTION,SPOOL,LIFT	ｽﾌﾟｰﾙｾｸｼｮﾝ	1	[5SV/VLS]SEE FIG.159
-	B-C0213-31026		SECTION,SPOOL,LIFT	ｽﾌﾟｰﾙｾｸｼｮﾝ	1	[5SV/VLL][5SV/SIL][5SV/TLH] SEE FIG.157
6	B-C0213-31259		SECTION,SPOOL,TILT	ｽﾌﾟｰﾙｾｸｼｮﾝ	1	[5SV]SEE FIG.160
-	B-C0213-31275		SECTION,SPOOL,TILT	ｽﾌﾟｰﾙｾｸｼｮﾝ	1	[5SV/VLS]SEE FIG.162
7	B-C0213-31273		SECTION,SPOOL,ATT	ｽﾌﾟｰﾙｾｸｼｮﾝ	2	[5SV]SEE FIG.163
8	B-C0213-31274		SECTION,SPOOL,ATT	ｽﾌﾟｰﾙｾｸｼｮﾝ	1	[5SV]SEE FIG.164
9	63130-25614		VALVE,MAIN-RELIEF	ﾊﾞﾙﾌﾞ	1	[5SV] INC.10,11
10	B-21001-00036	*	O-RING	Oﾘﾝｸﾞ	1	[5SV]
11	B-95113-01000	*	O-RING	Oﾘﾝｸﾞ	1	[5SV]
12	B-C0003-30301		VALVE,SHUT-OFF	ﾊﾞﾙﾌﾞ	6	[5SV]
-	B-21013-30697		VALVE,RELIEF	ﾊﾞﾙﾌﾞ	6	[5SV/VLS]
13	22N57-32041		BOLT	ﾎﾞﾙﾄ	2	[5SV]
14	216G7-32021		WASHER,PLANE	ﾜｯｼｬ	2	[5SV]
15	22N57-42201		RUBBER,VALVE	ﾗﾊﾞｰ	6	[5SV]
16	22N57-42211		COLLAR	ｶﾗｰ	2	[5SV]
17	20A77-32001		BOLT	ﾎﾞﾙﾄ	1	[5SV]
18	20A77-32011		COLLAR	ｶﾗｰ	1	[5SV]
19	124T3-43041		PLATE	ﾌﾟﾚｰﾄ	1	[5SV]

FIG.143 CONTROL VALVE (TOR-CON):[FIT]

(F7Z17350) ｺﾝﾄﾛｰﾙﾊﾞﾙﾌﾞ

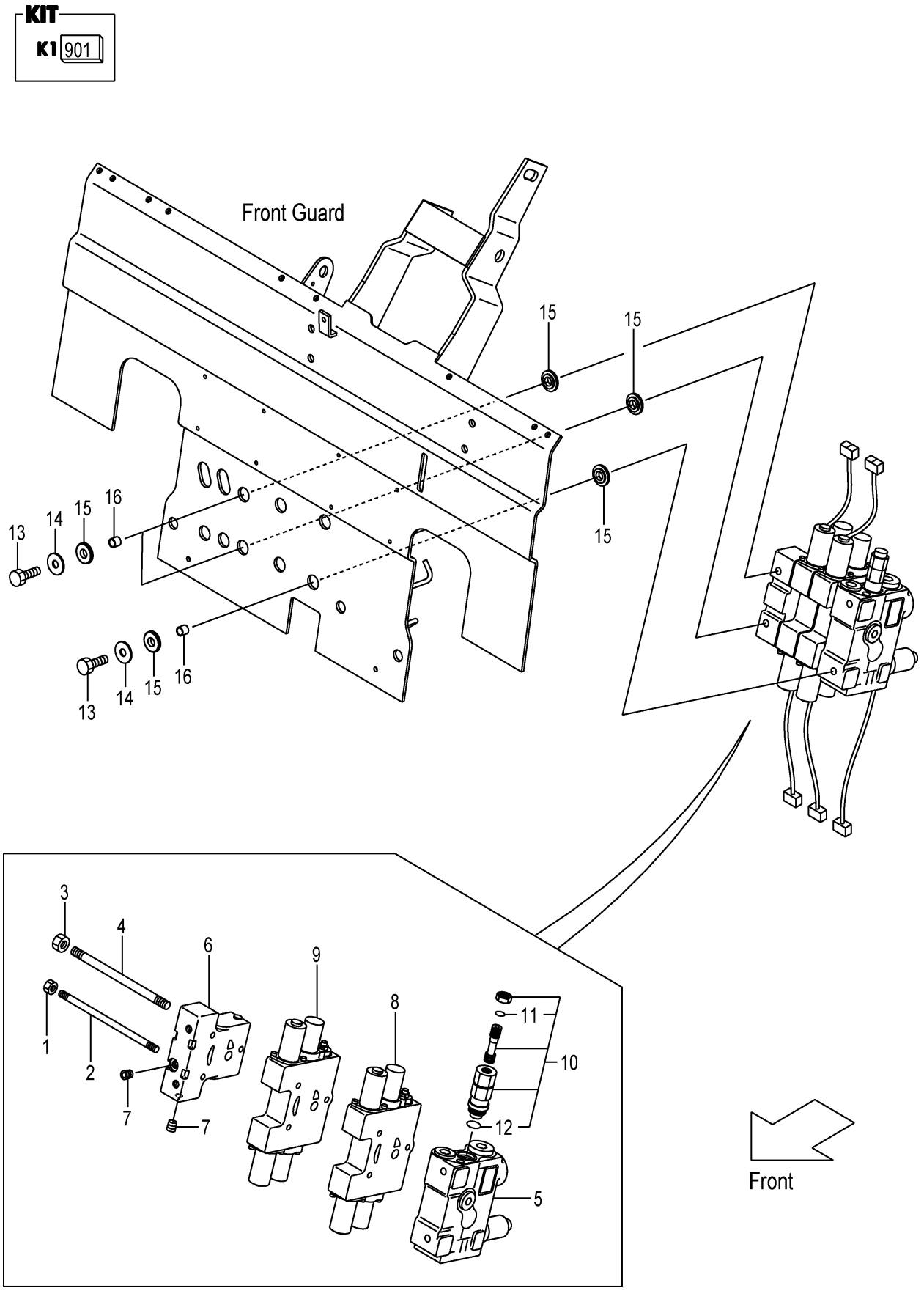

A:FHD15T3Z FHD18T3Z

Item No	Part No.	Mark	Description		Req'd	Remarks : Serial No.
A1	209W7-30201		VALVE-ASSY,CONTROL	ｺﾝﾄﾛｰﾙﾊﾞﾙﾌﾞｱｯｾﾝ	1	[FIT] INC.1-12
901	B-2101A-30016	K1	KIT,SEAL	ｼｰﾙｷｯﾄ	1	[FIT] INC.11,12
1	B-93118-08652		NUT	ﾅｯﾄ	2	[FIT]
2	B-21011-31108		ROD,TIE	ﾛｯﾄﾞ	2	[FIT]
3	B-93128-10082		NUT	ﾅｯﾄ	1	[FIT]
4	B-21011-31107		ROD,TIE	ﾛｯﾄﾞ	1	[FIT]
5	B-C0013-30045		SECTION,INLET	ｲﾝﾚｯﾄｾｸｼｮﾝ	1	[FIT]SEE FIG.165
A2	B-C0013-30203		SECTION-ASSY,OUTLET	ｱｳﾄﾚｯﾄｾｸｼｮﾝｱｯｾﾝ	1	[FIT] INC.6,7
6	NO PART NO.	#	HOUSING,OUTLET	ﾊｳｼﾞﾝｸﾞ	1	[FIT]
7	B-97123-01111		PLUG	ﾌﾟﾗｸﾞ	2	[FIT]
8	B-C0013-31629		SECTION,SPOOL	ｽﾌﾟｰﾙｾｸｼｮﾝ	1	[FIT](LIFT)SEE FIG.158
9	B-C0013-31451		SECTION,SPOOL	ｽﾌﾟｰﾙｾｸｼｮﾝ	1	[FIT](TILT)SEE FIG.161
10	63130-25614		VALVE,MAIN-RELIEF	ﾊﾞﾙﾌﾞ	1	[FIT] INC.11,12
11	NO PART NO.	#*	O-RING	Oﾘﾝｸﾞ	1	[FIT]
12	NO PART NO.	#*	O-RING	Oﾘﾝｸﾞ	1	[FIT]
13	22N57-32041		BOLT	ﾎﾞﾙﾄ	3	[FIT]
14	216G7-32021		WASHER,PLANE	ﾜｯｼｬ	3	[FIT]
15	22N57-42201		RUBBER,VALVE	ﾗﾊﾞｰ	6	[FIT]
16	22N57-42211		COLLAR	ｶﾗｰ	3	[FIT]

FIG.144 CONTROL VALVE (TOR-CON):[3SV/FIT]

(F7Z17360) コントロールバルブ

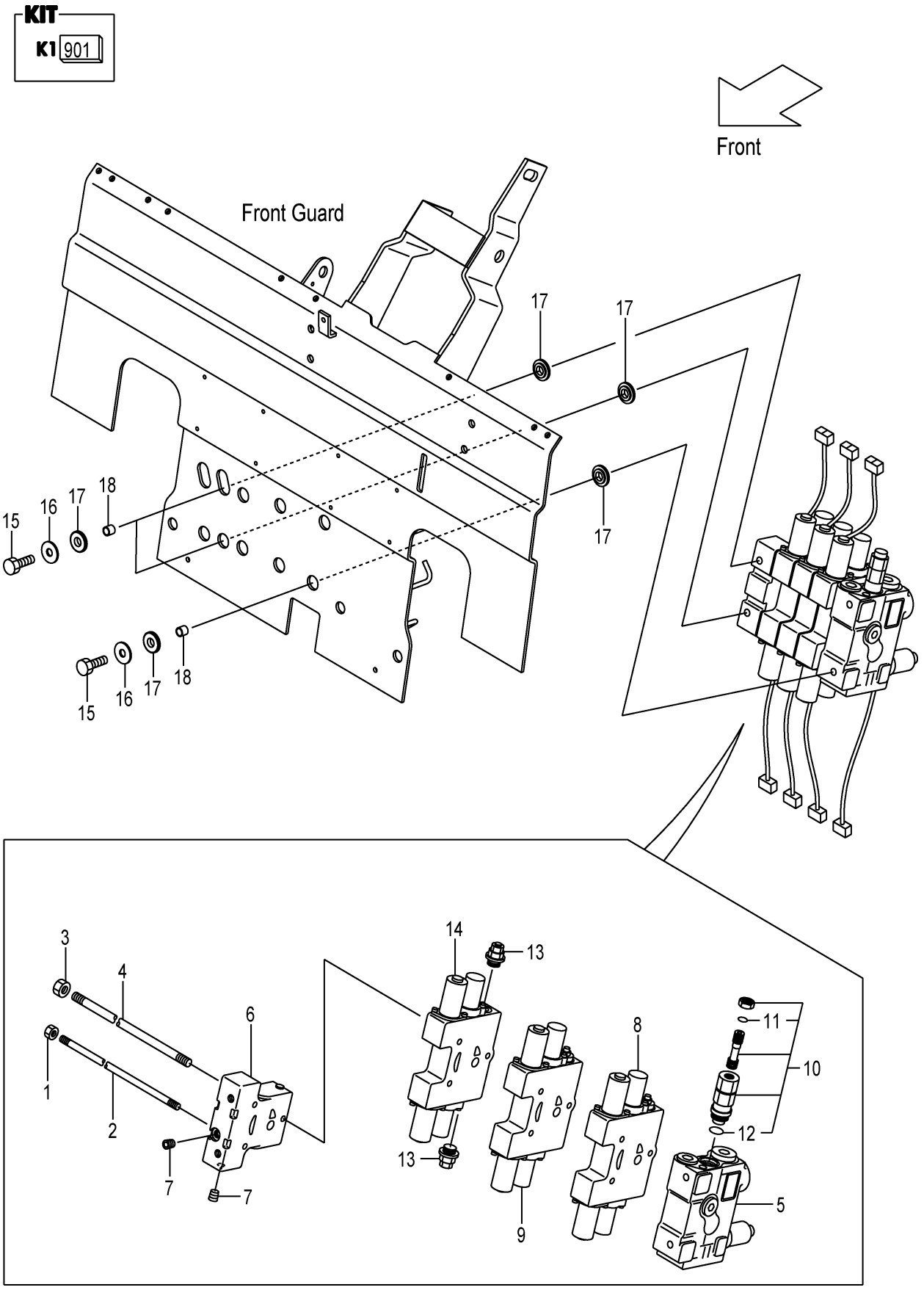

A:FHD15T3Z FHD18T3Z

Item No	Part No.	Mark	Description		Req'd	Remarks : Serial No.
A1	209W7-30301		VALVE-ASSY,CONTROL	ｺﾝﾄﾛｰﾙﾊﾞﾙﾌﾞｱｯｾﾝ	1	[3SV/FIT] INC.1-14
901	B-2101A-30016	K1	KIT,SEAL	ｼｰﾙｷｯﾄ	1	[3SV/FIT] INC.11,12
1	B-93118-08652		NUT	ﾅｯﾄ	2	[3SV/FIT]
2	B-21021-30114		ROD,TIE	ﾛｯﾄﾞ	2	[3SV/FIT]
3	B-93128-10082		NUT	ﾅｯﾄ	1	[3SV/FIT]
4	B-21021-30115		ROD,TIE	ﾛｯﾄﾞ	1	[3SV/FIT]
5	B-C0013-30045		SECTION,INLET	ｲﾝﾚｯﾄｾｸｼｮﾝ	1	[3SV/FIT]SEE FIG.165
A2	B-C0013-30203		SECTION-ASSY,OUTLET	ｱｳﾄﾚｯﾄｾｸｼｮﾝｱｯｾﾝ	1	[3SV/FIT] INC.6,7
6	NO PART NO.	#	HOUSING,OUTLET	ﾊｳｼﾞﾝｸﾞ	1	[3SV/FIT]
7	B-97123-01111		PLUG	ﾌﾟﾗｸﾞ	2	[3SV/FIT]
8	B-C0013-31629		SECTION,SPOOL	ｽﾌﾟｰﾙｾｸｼｮﾝ	1	[3SV/FIT](LIFT)SEE FIG.158
9	B-C0013-31451		SECTION,SPOOL	ｽﾌﾟｰﾙｾｸｼｮﾝ	1	[3SV/FIT](TILT)SEE FIG.161
10	63130-25614		VALVE,MAIN-RELIEF	ﾊﾞﾙﾌﾞ	1	[3SV/FIT] INC.11,12
11	NO PART NO.	#*	O-RING	Oﾘﾝｸﾞ	1	[3SV/FIT]
12	NO PART NO.	#*	O-RING	Oﾘﾝｸﾞ	1	[3SV/FIT]
13	B-C0003-30301		VALVE,SHUT-OFF	ﾊﾞﾙﾌﾞ	2	[3SV/FIT]
14	B-C0013-31638		SECTION,SPOOL	ｽﾌﾟｰﾙｾｸｼｮﾝ	1	[3SV/FIT](ATT)SEE FIG.166
15	22N57-32041		BOLT	ﾎﾞﾙﾄ	3	[3SV/FIT]
16	216G7-32021		WASHER,PLANE	ﾜｯｼｬ	3	[3SV/FIT]
17	22N57-42201		RUBBER,VALVE	ﾗﾊﾞｰ	6	[3SV/FIT]
18	22N57-42211		COLLAR	ｶﾗｰ	3	[3SV/FIT]

FIG.145 CONTROL VALVE (TOR-CON):[4SV/FIT]

(F7Z17370) コントロールバルブ

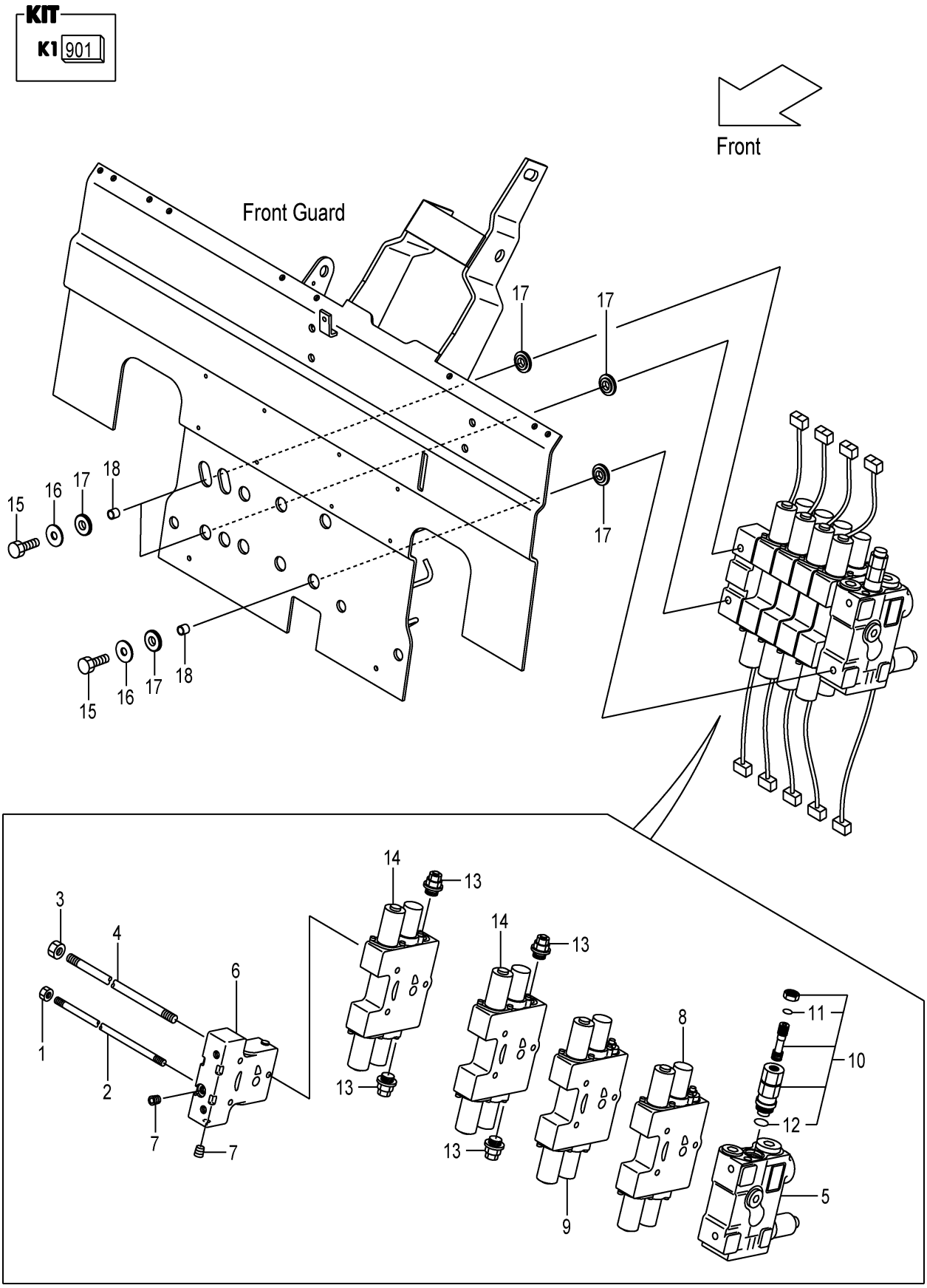

A:FHD15T3Z FHD18T3Z

Item No	Part No.	Mark	Description		Req'd	Remarks : Serial No.
A1	209W7-30401		VALVE-ASSY,CONTROL	ｺﾝﾄﾛｰﾙﾊﾞﾙﾌﾞｱｯｾﾝ	1	[4SV/FIT] INC.1-14
901	B-2101A-30016	K1	KIT,SEAL	ｼｰﾙｷｯﾄ	1	[4SV/FIT] INC.11,12
1	B-93118-08652		NUT	ﾅｯﾄ	2	[4SV/FIT]
2	B-21031-30107		ROD,TIE	ﾛｯﾄﾞ	2	[4SV/FIT]
3	B-93128-10082		NUT	ﾅｯﾄ	1	[4SV/FIT]
4	B-21041-30119		ROD,TIE	ﾛｯﾄﾞ	1	[4SV/FIT]
5	B-C0013-30045		SECTION,INLET	ｲﾝﾚｯﾄｾｸｼｮﾝ	1	[4SV/FIT]SEE FIG.165
A2	B-C0013-30203		SECTION-ASSY,OUTLET	ｱｳﾄﾚｯﾄｾｸｼｮﾝｱｯｾﾝ	1	[4SV/FIT] INC.6,7
6	NO PART NO.	#	HOUSING,OUTLET	ﾊｳｼﾞﾝｸﾞ	1	[4SV/FIT]
7	B-97123-01111		PLUG	ﾌﾟﾗｸﾞ	2	[4SV/FIT]
8	B-C0013-31629		SECTION,SPOOL	ｽﾌﾟｰﾙｾｸｼｮﾝ	1	[4SV/FIT](LIFT)SEE FIG.158
9	B-C0013-31451		SECTION,SPOOL	ｽﾌﾟｰﾙｾｸｼｮﾝ	1	[4SV/FIT](TILT)SEE FIG.161
10	63130-25614		VALVE,MAIN-RELIEF	ﾊﾞﾙﾌﾞ	1	[4SV/FIT] INC.11,12
11	NO PART NO.	#*	O-RING	Oﾘﾝｸﾞ	1	[4SV/FIT]
12	NO PART NO.	#*	O-RING	Oﾘﾝｸﾞ	1	[4SV/FIT]
13	B-C0003-30301		VALVE,SHUT-OFF	ﾊﾞﾙﾌﾞ	4	[4SV/FIT]
14	B-C0013-31638		SECTION,SPOOL	ｽﾌﾟｰﾙｾｸｼｮﾝ	2	[4SV/FIT](ATT)SEE FIG.166
15	22N57-32041		BOLT	ﾎﾞﾙﾄ	3	[4SV/FIT]
16	216G7-32021		WASHER,PLANE	ﾜｯｼｬ	3	[4SV/FIT]
17	22N57-42201		RUBBER,VALVE	ﾗﾊﾞｰ	6	[4SV/FIT]
18	22N57-42211		COLLAR	ｶﾗｰ	3	[4SV/FIT]

FIG.146 CONTROL VALVE FITTING

(F7Z17390) コントロールバルブフィッティング

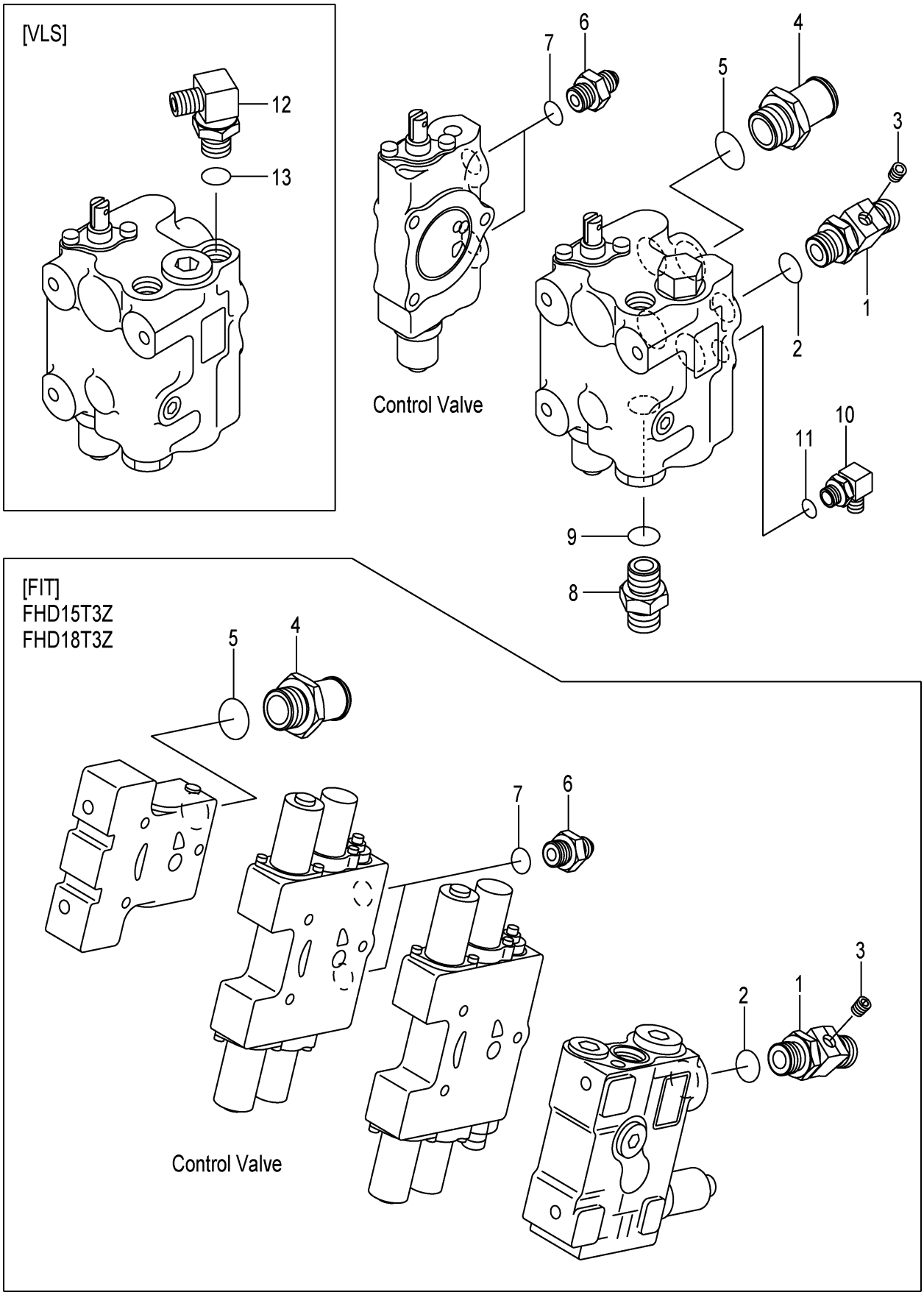

A:FHD15C3Z FHD18C3Z
B:FHD15T3Z FHD18T3Z

Item No	Part No.	Mark	Description		Req'd	Remarks : Serial No.
A1	20A77-62051		ELBOW-ASSY	ｴﾙﾎﾞｱｯｾﾝ	1	INC.1-3
1	NO PART NO.	#	ELBOW	ｴﾙﾎﾞ	1	
2	03320-00180		O-RING	Oﾘﾝｸﾞ	1	
3	23870-52871		PLUG,SUNK	ﾌﾟﾗｸﾞ	1	
A2	20A77-62501		NIPPLE-ASSY	ﾆｯﾌﾟﾙｱｯｾﾝ	1	INC.4,5
-	24237-60411		NIPPLE-ASSY	ﾆｯﾌﾟﾙｱｯｾﾝ	1	B
						[FIT] INC.4,5
4	NO PART NO.	#	NIPPLE	ﾆｯﾌﾟﾙ	1	
-	NO PART NO.	#	NIPPLE	ﾆｯﾌﾟﾙ	1	B
						[FIT]
5	03320-00240		O-RING	Oﾘﾝｸﾞ	1	
-	03320-00180		O-RING	Oﾘﾝｸﾞ	1	B
						[FIT]
A3	277H7-60601		NIPPLE-ASSY	ﾆｯﾌﾟﾙｱｯｾﾝ	2	INC.6,7
6	NO PART NO.	#	NIPPLE	ﾆｯﾌﾟﾙ	2	
7	03320-00140		O-RING	Oﾘﾝｸﾞ	2	
A4	04134-20404		NIPPLE-ASSY	ﾆｯﾌﾟﾙｱｯｾﾝ	1	(WITHOUT FIT) INC.8,9
8	NO PART NO.	#	NIPPLE	ﾆｯﾌﾟﾙ	1	(WITHOUT FIT)
9	03320-00180		O-RING	Oﾘﾝｸﾞ	1	(WITHOUT FIT)
A5	04150-20202		ELBOW-ASSY	ｴﾙﾎﾞｱｯｾﾝ	1	(WITHOUT FIT) INC.10,11
10	NO PART NO.	#	ELBOW	ｴﾙﾎﾞ	1	(WITHOUT FIT)
11	03320-00110		O-RING	Oﾘﾝｸﾞ	1	(WITHOUT FIT)
A6	04150-20303		ELBOW-ASSY	ｴﾙﾎﾞｱｯｾﾝ	1	[VLS] INC.12,13
12	NO PART NO.	#	ELBOW	ｴﾙﾎﾞ	1	[VLS]
13	03320-00140		O-RING	Oﾘﾝｸﾞ	1	[VLS]

FIG.147 VALVE CONTROL

(F7Z173A0) ﾊﾞﾙﾌﾞｺﾝﾄﾛｰﾙ

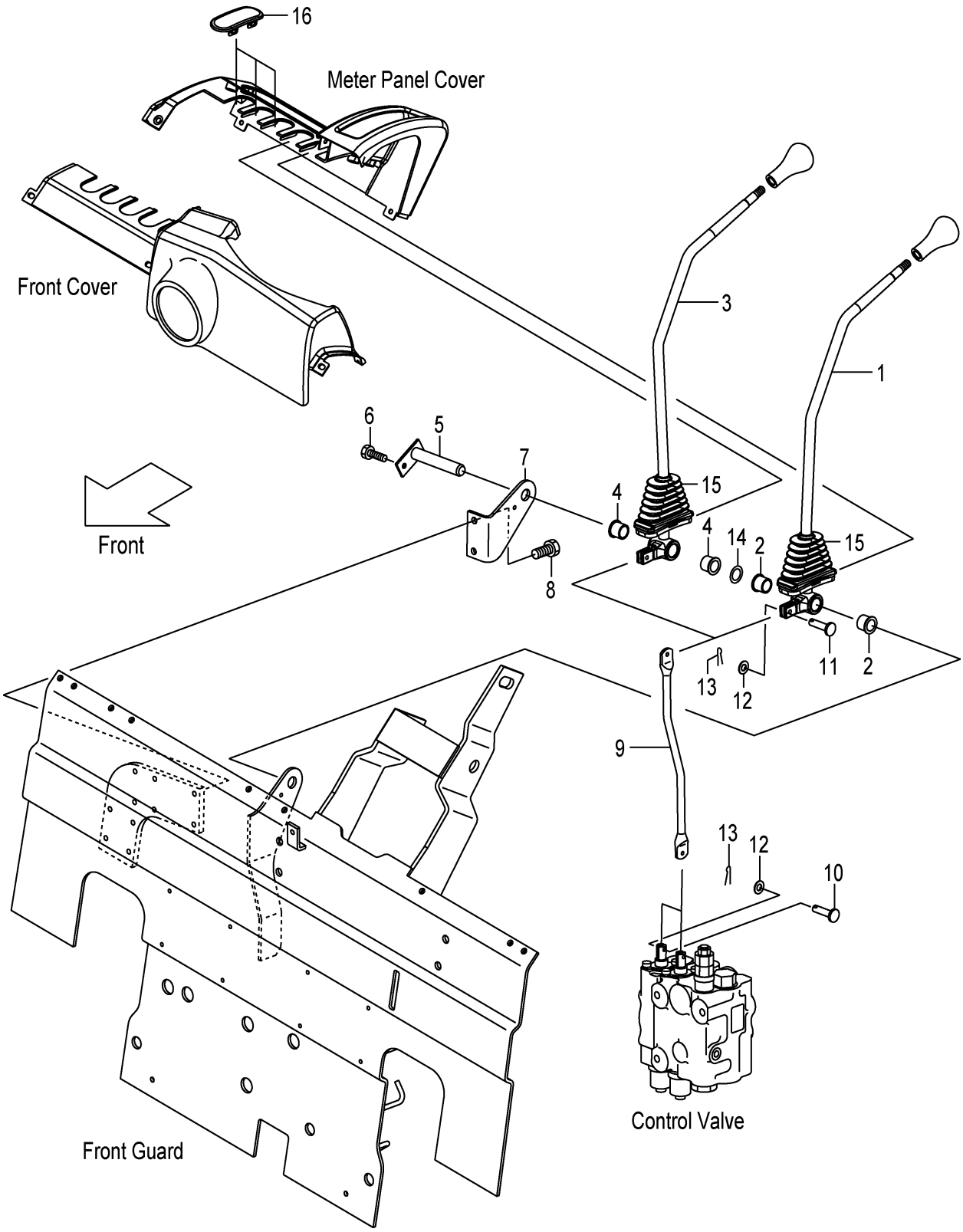

A:FHD15C3Z FHD15T3Z FHD18C3Z FHD18T3Z

Item No	Part No.	Mark	Description		Req'd	Remarks : Serial No.
A1	20A77-40011		LEVER-ASSY,LIFT	ﾘﾌﾄﾚﾊﾞｰｱｯｾﾝ	1	INC.1,2
-	22N57-40011		LEVER-ASSY,LIFT	ﾘﾌﾄﾚﾊﾞｰｱｯｾﾝ	1	[FC] INC.1,2
1	NO PART NO.	#	LEVER,LIFT	ﾚﾊﾞｰ	1	
-	NO PART NO.	#	LEVER,LIFT	ﾚﾊﾞｰ	1	[FC]
2	214A7-42071		BUSHING	ﾌﾞｯｼﾝｸﾞ	2	
A2	20A77-40021		LEVER-ASSY,TILT	ﾃｨﾙﾄﾚﾊﾞｰｱｯｾﾝ	1	INC.3,4
-	22N57-40021		LEVER-ASSY,TILT	ﾃｨﾙﾄﾚﾊﾞｰｱｯｾﾝ	1	[FC] INC.3,4
3	NO PART NO.	#	LEVER,TILT	ﾚﾊﾞｰ	1	
-	NO PART NO.	#	LEVER,TILT	ﾚﾊﾞｰ	1	[FC]
4	214A7-42071		BUSHING	ﾌﾞｯｼﾝｸﾞ	2	
5	23647-40041		SHAFT,2SV-LEVER	ｼｬﾌﾄ	1	
-	529F3-70401		SHAFT,2SV-LEVER	ｼｬﾌﾄ	1	[FC]
6	01183-06012		BOLT	ﾎﾞﾙﾄ	1	
7	22N57-42001		BRACKET,VALVE-LEVER	ﾌﾞﾗｹｯﾄ	1	
8	01183-08012		BOLT	ﾎﾞﾙﾄ	2	
9	20A77-42101		JOINT	ｼﾞｮｲﾝﾄ	2	
10	22717-40061		PIN,CLEVIS	ﾋﾟﾝ	2	
11	22N57-42121		PIN,CLEVIS	ﾋﾟﾝ	2	
12	02000-00005		WASHER	ﾜｯｼｬ	4	
13	02200-16010		PIN,COTTER	ﾋﾟﾝ	4	
14	22517-40051		SHIM,T-0.2	ｼﾑ	3	
15	22N57-42151		BOOT	ﾌﾞｰﾂ	2	
16	22N57-42161		COVER,VALVE-LEVER	ｶﾊﾞｰ	3	

FIG.148 VALVE CONTROL [3SV]

(F7Z173B0) ﾊﾞﾙﾌﾞｺﾝﾄﾛｰﾙ

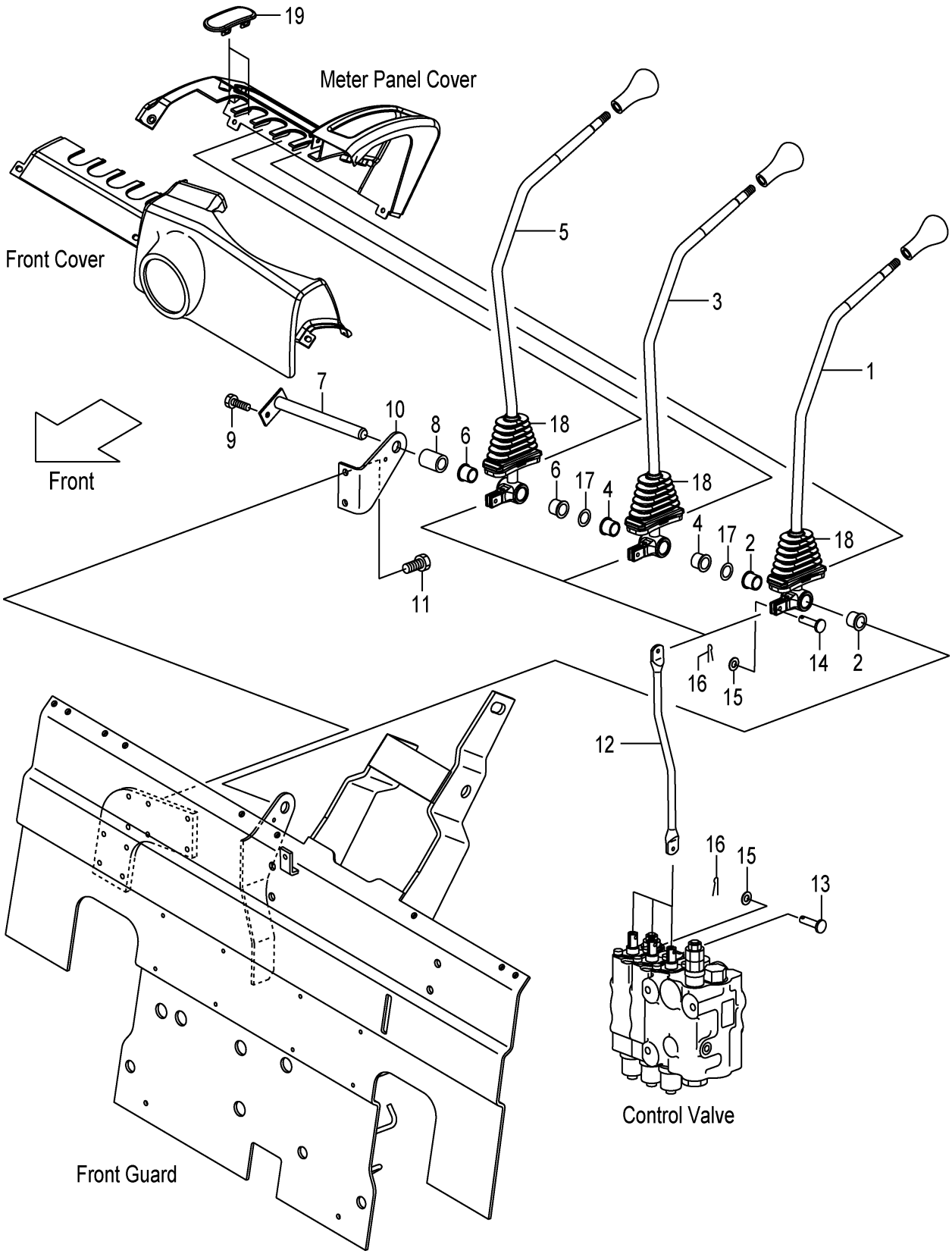

A:FHD15C3Z FHD15T3Z FHD18C3Z FHD18T3Z

Item No	Part No.	Mark	Description		Req'd	Remarks : Serial No.
A1	20A77-40011		LEVER-ASSY,LIFT	ﾘﾌﾄﾚﾊﾞｰｱｯｾﾝ	1	[3SV] INC.1,2
-	22N57-40011		LEVER-ASSY,LIFT	ﾘﾌﾄﾚﾊﾞｰｱｯｾﾝ	1	[3SV/FC] INC.1,2
1	NO PART NO.	#	LEVER,LIFT	ﾚﾊﾞｰ	1	[3SV]
-	NO PART NO.	#	LEVER,LIFT	ﾚﾊﾞｰ	1	[3SV/FC]
2	214A7-42071		BUSHING	ﾌﾞｯｼﾝｸﾞ	2	[3SV]
A2	20A77-40021		LEVER-ASSY,TILT	ﾃｨﾙﾄﾚﾊﾞｰｱｯｾﾝ	1	[3SV] INC.3,4
-	22N57-40021		LEVER-ASSY,TILT	ﾃｨﾙﾄﾚﾊﾞｰｱｯｾﾝ	1	[3SV/FC] INC.3,4
3	NO PART NO.	#	LEVER,TILT	ﾚﾊﾞｰ	1	[3SV]
-	NO PART NO.	#	LEVER,TILT	ﾚﾊﾞｰ	1	[3SV/FC]
4	214A7-42071		BUSHING	ﾌﾞｯｼﾝｸﾞ	2	[3SV]
A3	20A77-40031		LEVER-ASSY,THIRD	ｻｰﾄﾞﾚﾊﾞｰｱｯｾﾝ	1	[3SV] INC.5,6
-	22N57-40031		LEVER-ASSY,THIRD	ｻｰﾄﾞﾚﾊﾞｰｱｯｾﾝ	1	[3SV/FC] INC.5,6
5	NO PART NO.	#	LEVER,THIRD	ﾚﾊﾞｰ	1	[3SV]
-	NO PART NO.	#	LEVER,THIRD	ﾚﾊﾞｰ	1	[3SV/FC]
6	214A7-42071		BUSHING	ﾌﾞｯｼﾝｸﾞ	2	[3SV]
7	23457-42041		SHAFT,3&4SV-LEVER	ｼｬﾌﾄ	1	[3SV]
-	529F3-70411		SHAFT,3&4SV-LEVER	ｼｬﾌﾄ	1	[3SV/FC]
8	23657-42131		COLLAR	ｶﾗｰ	1	[3SV]
9	01183-06012		BOLT	ﾎﾞﾙﾄ	1	[3SV]
10	22N57-42001		BRACKET,VALVE-LEVER	ﾌﾞﾗｹｯﾄ	1	[3SV]
11	01183-08012		BOLT	ﾎﾞﾙﾄ	2	[3SV]
12	20A77-42101		JOINT	ｼﾞｮｲﾝﾄ	3	[3SV]
13	22717-40061		PIN,CLEVIS	ﾋﾟﾝ	3	[3SV]
14	22N57-42121		PIN,CLEVIS	ﾋﾟﾝ	3	[3SV]
15	02000-00005		WASHER	ﾜｯｼｬ	6	[3SV]
16	02200-16010		PIN,COTTER	ﾋﾟﾝ	6	[3SV]
17	22517-40051		SHIM,T-0.2	ｼﾑ	6	[3SV]
18	22N57-42151		BOOT	ﾌﾞｰﾂ	3	[3SV]
19	22N57-42161		COVER,VALVE-LEVER	ｶﾊﾞｰ	2	[3SV]

FIG.149 VALVE CONTROL [4SV]

(F7Z173C0) ﾊﾞﾙﾌﾞｺﾝﾄﾛｰﾙ

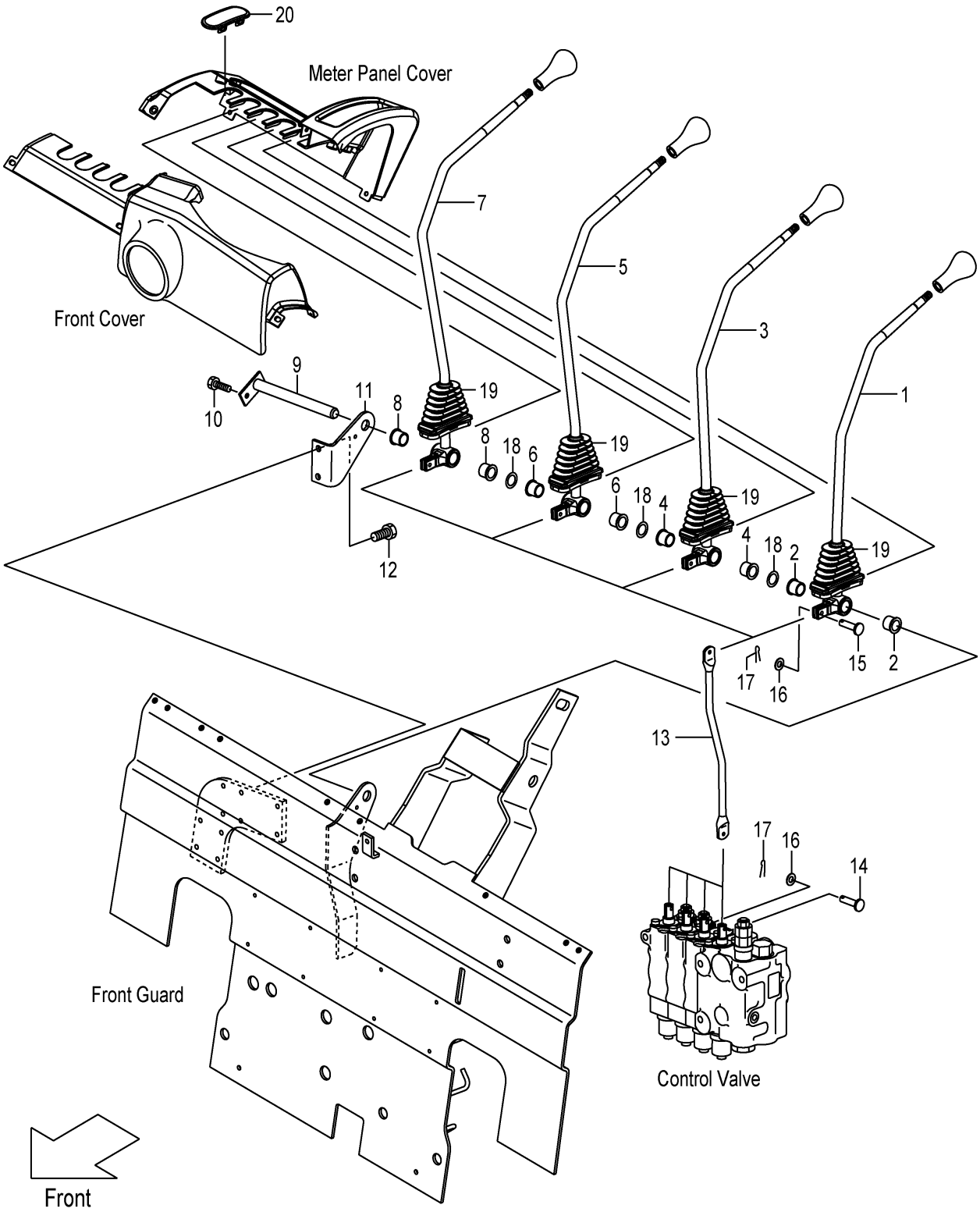

A:FHD15C3Z FHD15T3Z FHD18C3Z FHD18T3Z

Item No	Part No.	Mark	Description		Req'd	Remarks : Serial No.
A1	20A77-40011		LEVER-ASSY,LIFT	ﾘﾌﾄﾚﾊﾞｰｱｯｾﾝ	1	[4SV] INC.1,2
-	22N57-40011		LEVER-ASSY,LIFT	ﾘﾌﾄﾚﾊﾞｰｱｯｾﾝ	1	[4SV/FC] INC.1,2
1	NO PART NO.	#	LEVER,LIFT	ﾚﾊﾞｰ	1	[4SV]
-	NO PART NO.	#	LEVER,LIFT	ﾚﾊﾞｰ	1	[4SV/FC]
2	214A7-42071		BUSHING	ﾌﾞｯｼﾝｸﾞ	2	[4SV]
A2	20A77-40021		LEVER-ASSY,TILT	ﾃｨﾙﾄﾚﾊﾞｰｱｯｾﾝ	1	[4SV] INC.3,4
-	22N57-40021		LEVER-ASSY,TILT	ﾃｨﾙﾄﾚﾊﾞｰｱｯｾﾝ	1	[4SV/FC] INC.3,4
3	NO PART NO.	#	LEVER,TILT	ﾚﾊﾞｰ	1	[4SV]
-	NO PART NO.	#	LEVER,TILT	ﾚﾊﾞｰ	1	[4SV/FC]
4	214A7-42071		BUSHING	ﾌﾞｯｼﾝｸﾞ	2	[4SV]
A3	20A77-40031		LEVER-ASSY,THIRD	ｻｰﾄﾞﾚﾊﾞｰｱｯｾﾝ	1	[4SV] INC.5,6
-	22N57-40031		LEVER-ASSY,THIRD	ｻｰﾄﾞﾚﾊﾞｰｱｯｾﾝ	1	[4SV/FC] INC.5,6
5	NO PART NO.	#	LEVER,THIRD	ﾚﾊﾞｰ	1	[4SV]
-	NO PART NO.	#	LEVER,THIRD	ﾚﾊﾞｰ	1	[4SV/FC]
6	214A7-42071		BUSHING	ﾌﾞｯｼﾝｸﾞ	2	[4SV]
A4	20A77-40041		LEVER-ASSY,FOURTH	ﾌｫｰｽﾚﾊﾞｰｱｯｾﾝ	1	[4SV] INC.7,8
-	22N57-40041		LEVER-ASSY,FOURTH	ﾌｫｰｽﾚﾊﾞｰｱｯｾﾝ	1	[4SV/FC] INC.7,8
7	NO PART NO.	#	LEVER,FOURTH	ﾚﾊﾞｰ	1	[4SV]
-	NO PART NO.	#	LEVER,FOURTH	ﾚﾊﾞｰ	1	[4SV/FC]
8	214A7-42071		BUSHING	ﾌﾞｯｼﾝｸﾞ	2	[4SV]
9	23457-42041		SHAFT,3&4SV-LEVER	ｼｬﾌﾄ	1	[4SV]
-	529F3-70411		SHAFT,3&4SV-LEVER	ｼｬﾌﾄ	1	[4SV/FC]
10	01183-06012		BOLT	ﾎﾞﾙﾄ	1	[4SV]
11	22N57-42001		BRACKET,VALVE-LEVER	ﾌﾞﾗｹｯﾄ	1	[4SV]
12	01183-08012		BOLT	ﾎﾞﾙﾄ	2	[4SV]
13	20A77-42101		JOINT	ｼﾞｮｲﾝﾄ	4	[4SV]
14	22717-40061		PIN,CLEVIS	ﾋﾟﾝ	4	[4SV]
15	22N57-42121		PIN,CLEVIS	ﾋﾟﾝ	4	[4SV]
16	02000-00005		WASHER	ﾜｯｼｬ	8	[4SV]
17	02200-16010		PIN,COTTER	ﾋﾟﾝ	8	[4SV]
18	22517-40051		SHIM,T-0.2	ｼﾑ	9	[4SV]
19	22N57-42151		BOOT	ﾌﾞｰﾂ	4	[4SV]
20	22N57-42161		COVER,VALVE-LEVER	ｶﾊﾞｰ	1	[4SV]

FIG.150 VALVE CONTROL [5SV]

(F7Z173D0) ﾊﾞﾙﾌﾞｺﾝﾄﾛｰﾙ

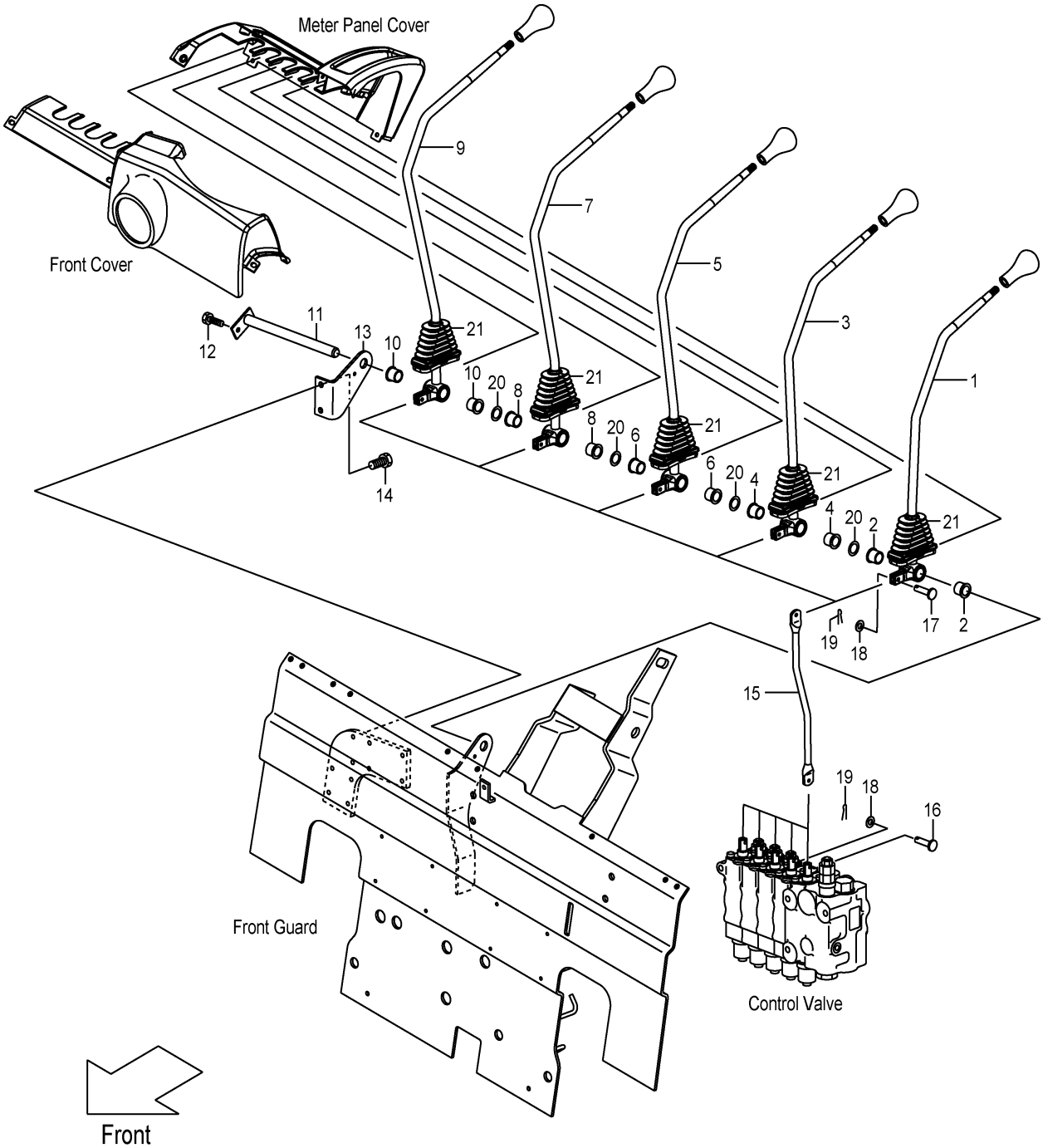

A:FHD15C3Z FHD15T3Z FHD18C3Z FHD18T3Z

Item No	Part No.	Mark	Description		Req'd	Remarks : Serial No.
A1	20A77-40011		LEVER-ASSY,LIFT	ﾘﾌﾄﾚﾊﾞｰｱｯｾﾝ	1	[5SV] INC.1,2
-	22N57-40011		LEVER-ASSY,LIFT	ﾘﾌﾄﾚﾊﾞｰｱｯｾﾝ	1	[5SV/FC] INC.1,2
1	NO PART NO.	#	LEVER,LIFT	ﾚﾊﾞｰ	1	[5SV]
-	NO PART NO.	#	LEVER,LIFT	ﾚﾊﾞｰ	1	[5SV/FC]
2	214A7-42071		BUSHING	ﾌﾞｯｼﾝｸﾞ	2	[5SV]
A2	20A77-40021		LEVER-ASSY,TILT	ﾃｨﾙﾄﾚﾊﾞｰｱｯｾﾝ	1	[5SV] INC.3,4
-	22N57-40021		LEVER-ASSY,TILT	ﾃｨﾙﾄﾚﾊﾞｰｱｯｾﾝ	1	[5SV/FC] INC.3,4
3	NO PART NO.	#	LEVER,TILT	ﾚﾊﾞｰ	1	[5SV]
-	NO PART NO.	#	LEVER,TILT	ﾚﾊﾞｰ	1	[5SV/FC]
4	214A7-42071		BUSHING	ﾌﾞｯｼﾝｸﾞ	2	[5SV]
A3	20A77-40031		LEVER-ASSY,THIRD	ｻｰﾄﾞﾚﾊﾞｰｱｯｾﾝ	1	[5SV] INC.5,6
-	22N57-40031		LEVER-ASSY,THIRD	ｻｰﾄﾞﾚﾊﾞｰｱｯｾﾝ	1	[5SV/FC] INC.5,6
5	NO PART NO.	#	LEVER,THIRD	ﾚﾊﾞｰ	1	[5SV]
-	NO PART NO.	#	LEVER,THIRD	ﾚﾊﾞｰ	1	[5SV/FC]
6	214A7-42071		BUSHING	ﾌﾞｯｼﾝｸﾞ	2	[5SV]
A4	20A77-40041		LEVER-ASSY,FOURTH	ﾌｫｰｽﾚﾊﾞｰｱｯｾﾝ	1	[5SV] INC.7,8
-	22N57-40041		LEVER-ASSY,FOURTH	ﾌｫｰｽﾚﾊﾞｰｱｯｾﾝ	1	[5SV/FC] INC.7,8
7	NO PART NO.	#	LEVER,FOURTH	ﾚﾊﾞｰ	1	[5SV]
-	NO PART NO.	#	LEVER,FOURTH	ﾚﾊﾞｰ	1	[5SV/FC]
8	214A7-42071		BUSHING	ﾌﾞｯｼﾝｸﾞ	2	[5SV]
A5	20A77-40051		LEVER-ASSY,FIFTH	ﾌｨﾌｽﾚﾊﾞｰｱｯｾﾝ	1	[5SV] INC.9,10
-	22N57-40051		LEVER-ASSY,FIFTH	ﾌｨﾌｽﾚﾊﾞｰｱｯｾﾝ	1	[5SV/FC] INC.9,10
9	NO PART NO.	#	LEVER,FIFTH	ﾚﾊﾞｰ	1	[5SV]
-	NO PART NO.	#	LEVER,FIFTH	ﾚﾊﾞｰ	1	[5SV/FC]
10	214A7-42071		BUSHING	ﾌﾞｯｼﾝｸﾞ	2	[5SV]
11	55593-02371		SHAFT,5SV-LEVER	ｼｬﾌﾄ	1	[5SV]
-	529F3-70421		SHAFT,5SV-LEVER	ｼｬﾌﾄ	1	[5SV/FC]
12	01183-06012		BOLT	ﾎﾞﾙﾄ	1	[5SV]
13	22N57-42001		BRACKET,VALVE-LEVER	ﾌﾞﾗｹｯﾄ	1	[5SV]
14	01183-08012		BOLT	ﾎﾞﾙﾄ	2	[5SV]
15	20A77-42101		JOINT	ｼﾞｮｲﾝﾄ	5	[5SV]
16	22717-40061		PIN,CLEVIS	ﾋﾟﾝ	5	[5SV]
17	22N57-42121		PIN,CLEVIS	ﾋﾟﾝ	5	[5SV]
18	02000-00005		WASHER	ﾜｯｼｬ	10	[5SV]
19	02200-16010		PIN,COTTER	ﾋﾟﾝ	10	[5SV]
20	22517-40051		SHIM,T-0.2	ｼﾑ	12	[5SV]
21	22N57-42151		BOOT	ﾌﾞｰﾂ	5	[5SV]

FIG.151 VALVE CONTROL (TOR-CON):[FIT]

(F7Z173E0) ﾊﾞﾙﾌﾞｺﾝﾄﾛｰﾙ

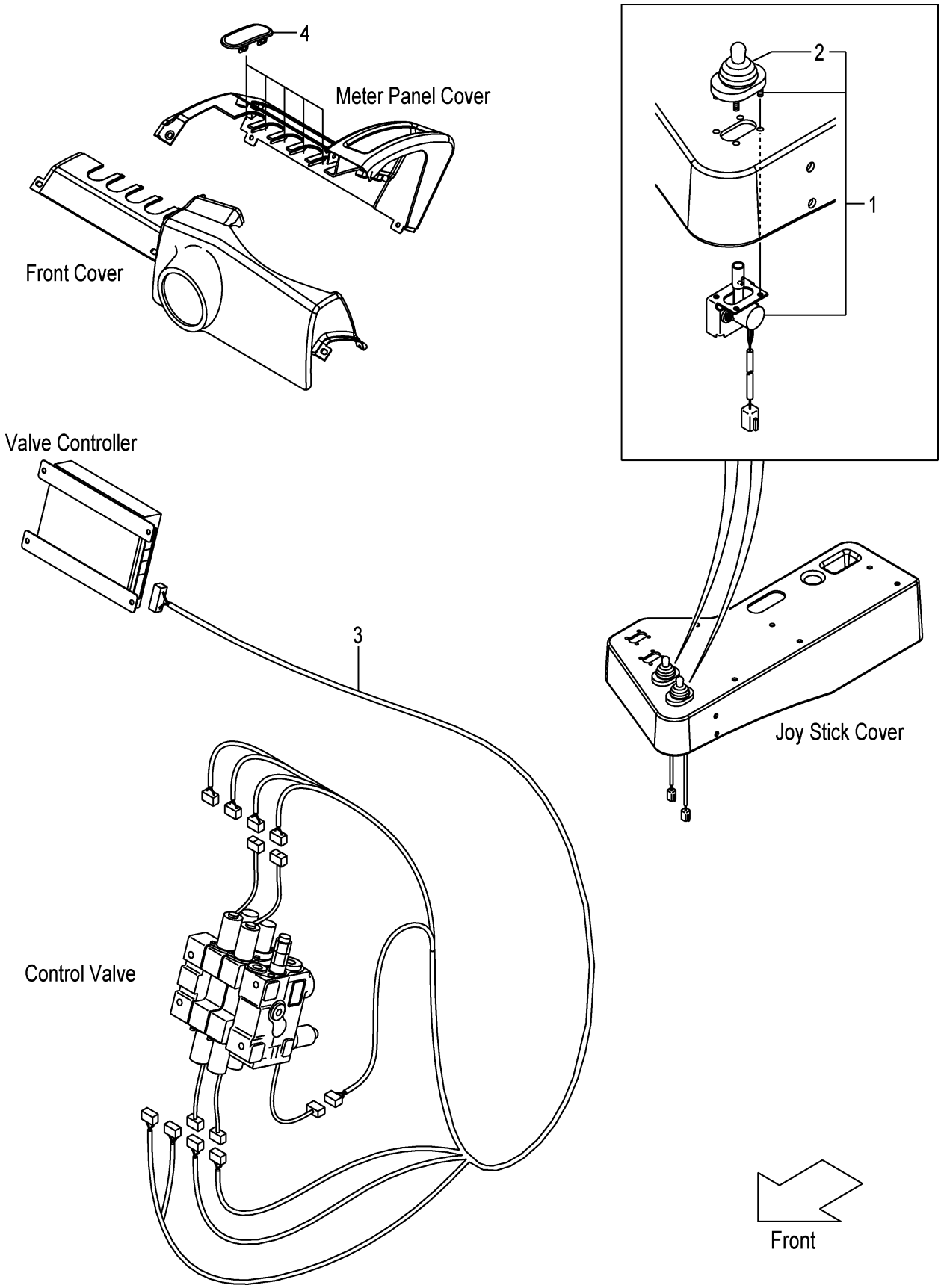

A:FHD15T3Z FHD18T3Z

Item No	Part No.	Mark	Description		Req'd	Remarks : Serial No.
1	209K7-40301		JOY-STICK	ｼﾞｮｲｽﾃｨｯｸ	2	[FIT] INC.2
2	2006-00212		BOOT	ﾌﾞｰﾂ	2	[FIT]
3	52N52-B2342		WIRE-HARNESS,VALVE	ﾜｲﾔﾊｰﾈｽ	1	[FIT]
4	22N57-42161		COVER,VALVE-LEVER	ｶﾊﾞｰ	5	[FIT]

FIG.152 VALVE CONTROL (TOR-CON):[3SV/FIT]

(F7Z173F0) ﾊﾞﾙﾌﾞｺﾝﾄﾛｰﾙ

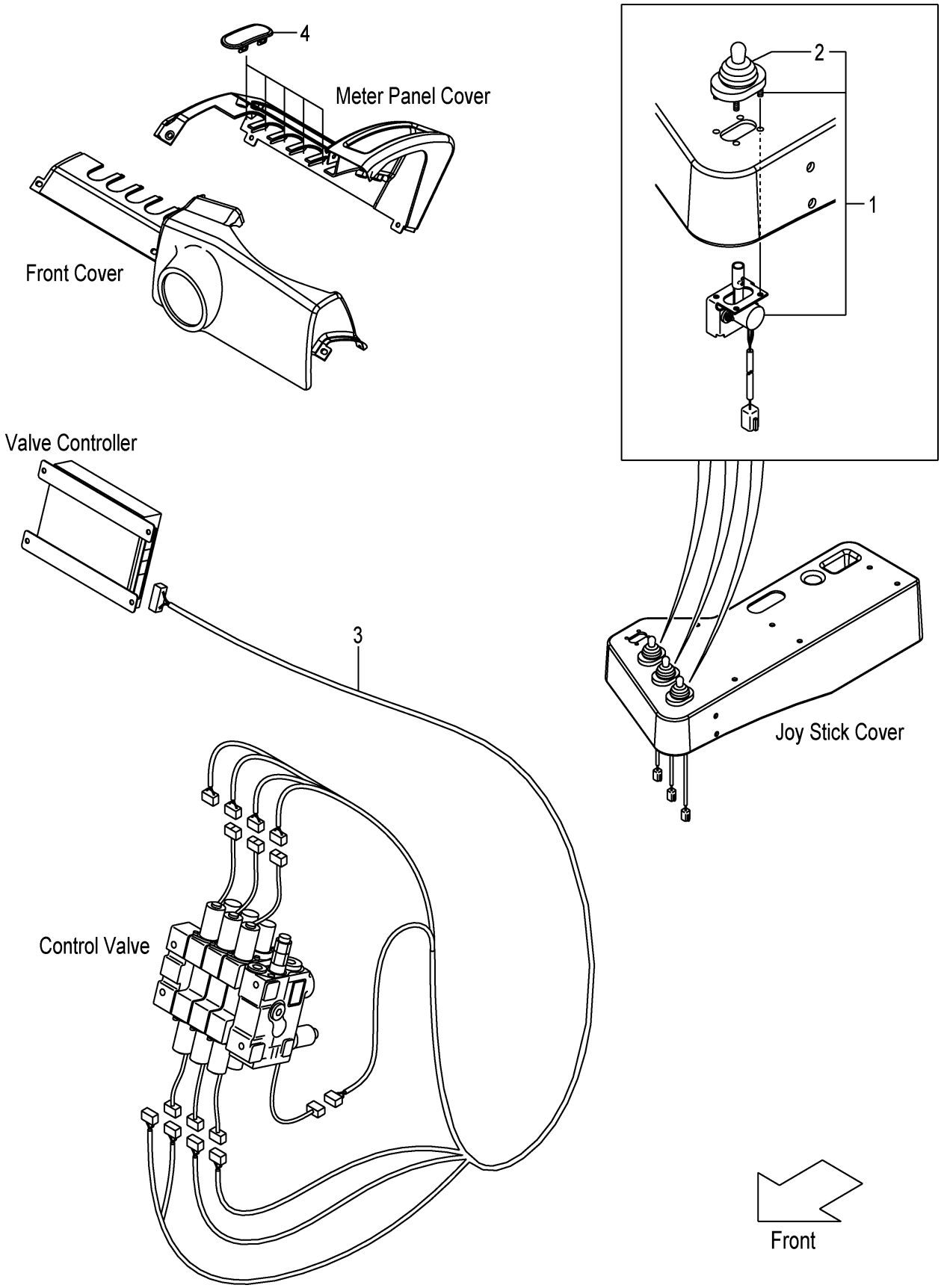

A:FHD15T3Z FHD18T3Z

Item No	Part No.	Mark	Description		Req'd	Remarks : Serial No.
1	209K7-40301		JOY-STICK	ｼﾞｮｲｽﾃｨｯｸ	3	[3SV/FIT] INC.2
2	2006-00212		BOOT	ﾌﾞｰﾂ	3	[3SV/FIT]
3	52N52-B2342		WIRE-HARNESS,VALVE	ﾜｲﾔﾊｰﾈｽ	1	[3SV/FIT]
4	22N57-42161		COVER,VALVE-LEVER	ｶﾊﾞｰ	5	[3SV/FIT]

FIG.153 VALVE CONTROL (TOR-CON):[4SV/FIT]

(F7Z173G0) ﾊﾞﾙﾌﾞｺﾝﾄﾛｰﾙ

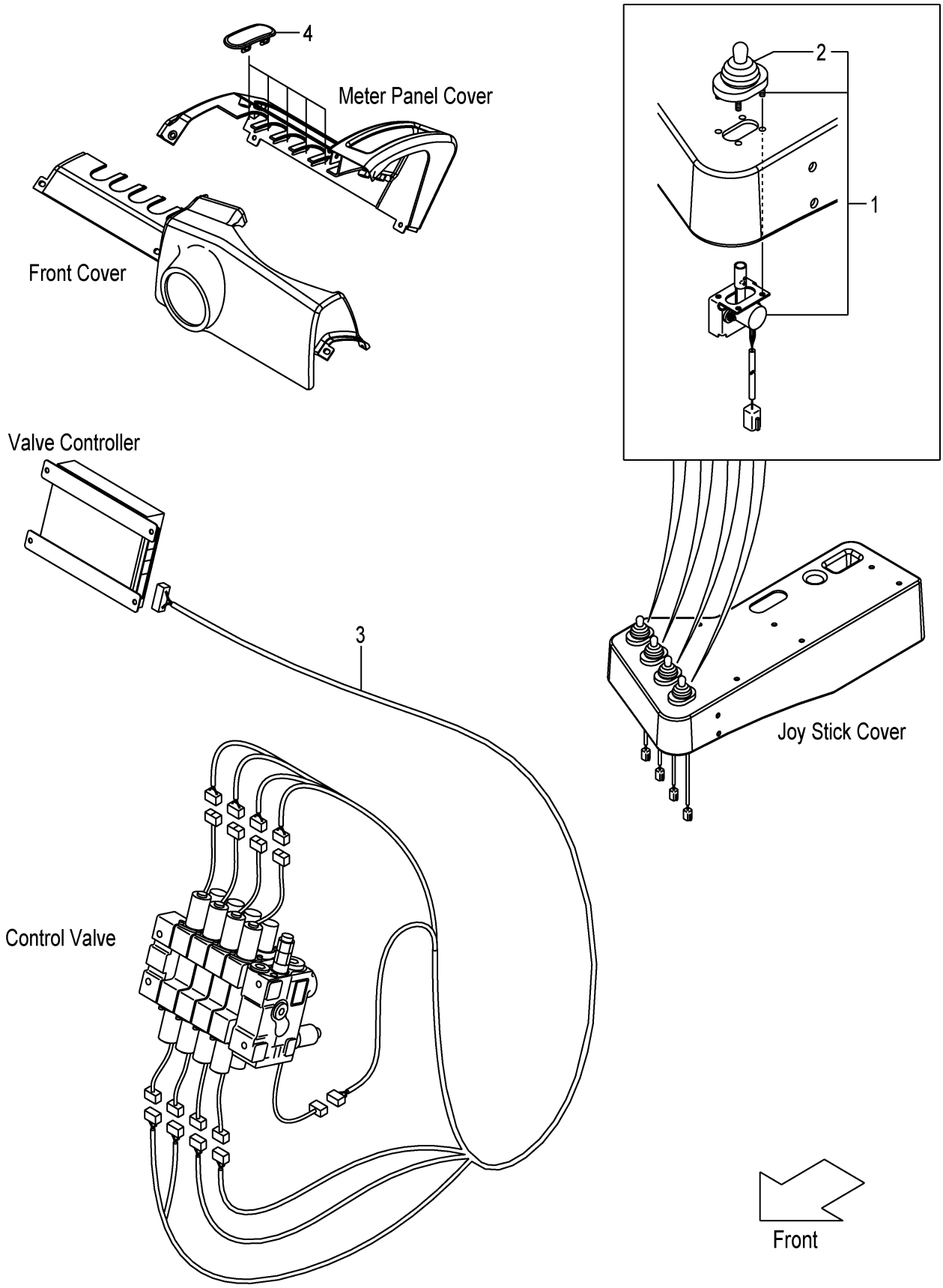

A:FHD15T3Z FHD18T3Z

Item No	Part No.	Mark	Description		Req'd	Remarks : Serial No.
1	209K7-40301		JOY-STICK	ｼﾞｮｲｽﾃｨｯｸ	4	[4SV/FIT] INC.2
2	2006-00212		BOOT	ﾌﾞｰﾂ	4	[4SV/FIT]
3	52N52-B2342		WIRE-HARNESS,VALVE	ﾜｲﾔﾊｰﾈｽ	1	[4SV/FIT]
4	22N57-42161		COVER,VALVE-LEVER	ｶﾊﾞｰ	5	[4SV/FIT]

FIG.154 VALVE CONTROL KNOB

(F7Z173J0) ﾊﾞﾙﾌﾞｺﾝﾄﾛｰﾙﾉﾌﾞ

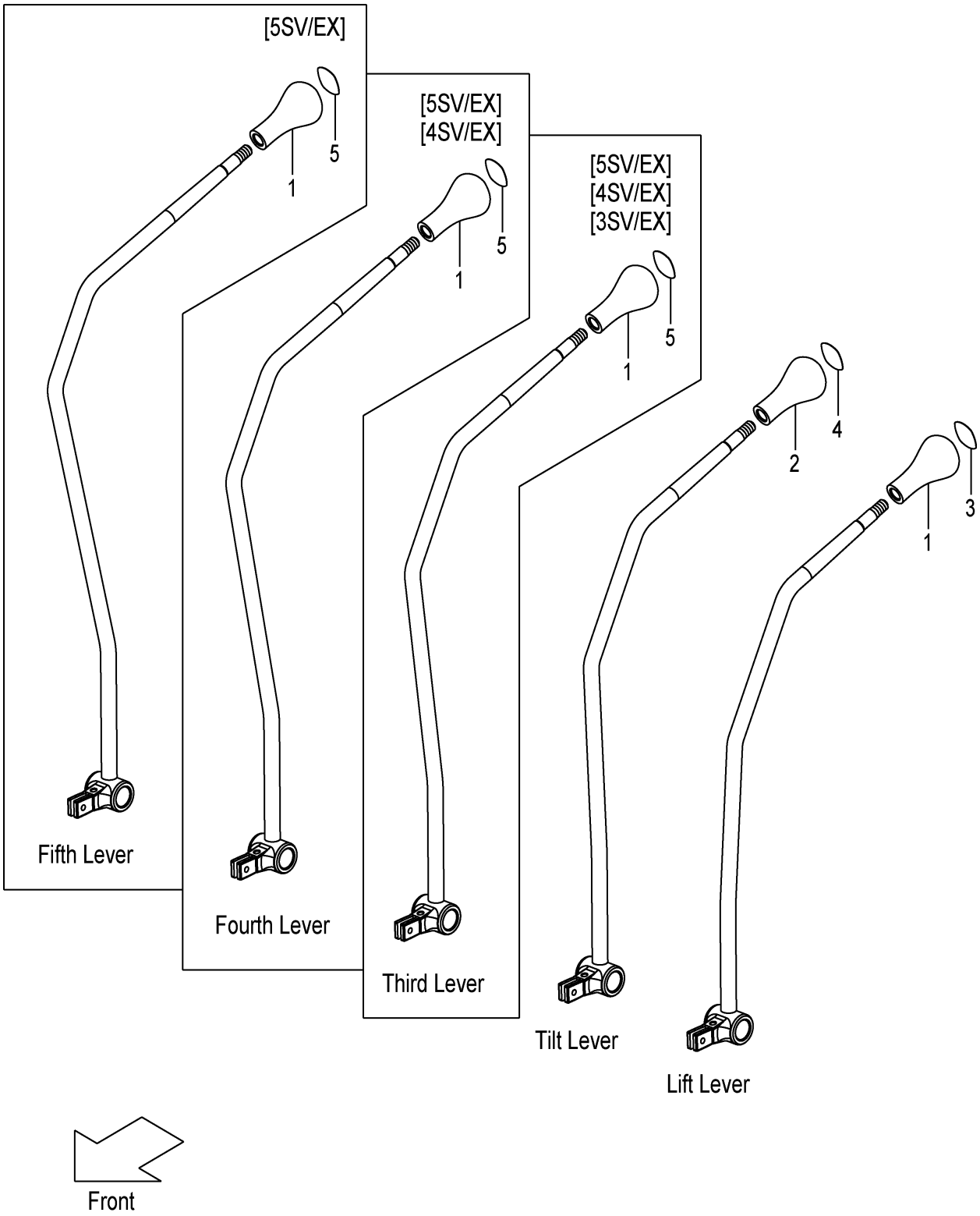

A:FHD15C3Z FHD15T3Z FHD18C3Z FHD18T3Z

Item No	Part No.	Mark	Description	Req'd	Remarks : Serial No.
1	214A7-42181		KNOB,VALVE-LEVER ﾉﾌﾞ	1	
-	214A7-42181		KNOB,VALVE-LEVER ﾉﾌﾞ	2	[3SV/EX]
-	214A7-42181		KNOB,VALVE-LEVER ﾉﾌﾞ	3	[4SV/EX]
-	214A7-42181		KNOB,VALVE-LEVER ﾉﾌﾞ	4	[5SV/EX]
2	281E7-42101		KNOB,VALVE-LEVER ﾉﾌﾞ	1	
3	214A7-42191		DECAL,SYMBOL,LIFT ﾃﾞｶﾙ	1	
4	214A7-42201		DECAL,SYMBOL,TILT ﾃﾞｶﾙ	1	
5	514A2-72411		DECAL,SYMBOL,SPACE ﾃﾞｶﾙ	1	[3SV/EX]
-	514A2-72411		DECAL,SYMBOL,SPACE ﾃﾞｶﾙ	2	[4SV/EX]
-	514A2-72411		DECAL,SYMBOL,SPACE ﾃﾞｶﾙ	3	[5SV/EX]

FIG.155 VALVE CONTROL KNOB (TOR-CON):[FIT]

(F7Z173K0) ﾊﾞﾙﾌﾞｺﾝﾄﾛｰﾙﾉﾌﾞ

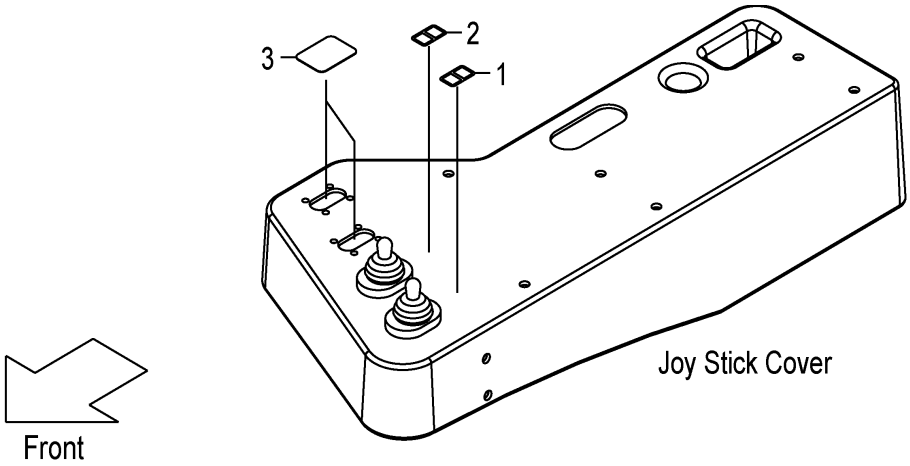

[3SV/FIT]

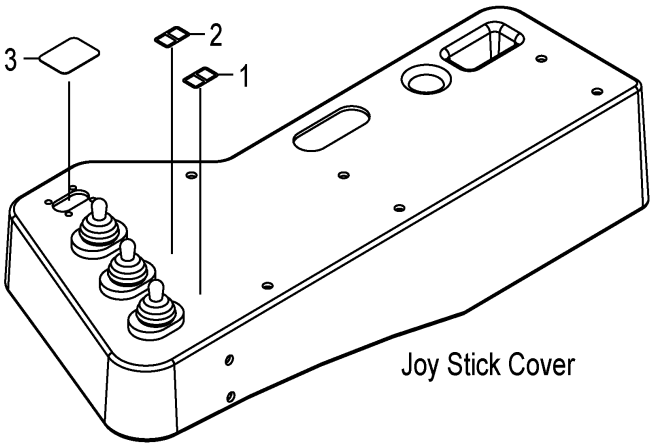

[4SV/FIT]

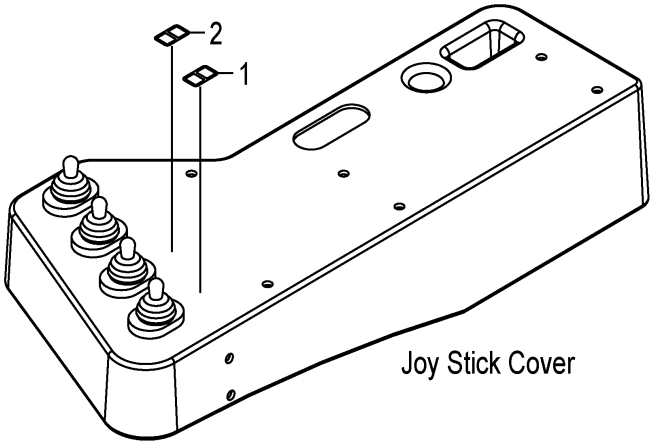

A:FHD15T3Z FHD18T3Z

Item No	Part No.	Mark	Description	Req'd	Remarks : Serial No.
1	209P7-42801		DECAL,SYMBOL,LIFT デカル	1	[FIT]
2	209P7-42811		DECAL,SYMBOL,TIFT デカル	1	[FIT]
3	209P7-42821		SEAL,PANEL-COVER シール	2	[FIT](WITHOUT 4SV/FIT)
-	209P7-42821		SEAL,PANEL-COVER シール	1	[3SV/FIT]

FIG.156 VALVE LEVER BRACKET (TOR-CON):[FIT]

(F7Z173L0) ﾊﾞﾙﾌﾞﾚﾊﾞｰﾌﾞﾗｹｯﾄ

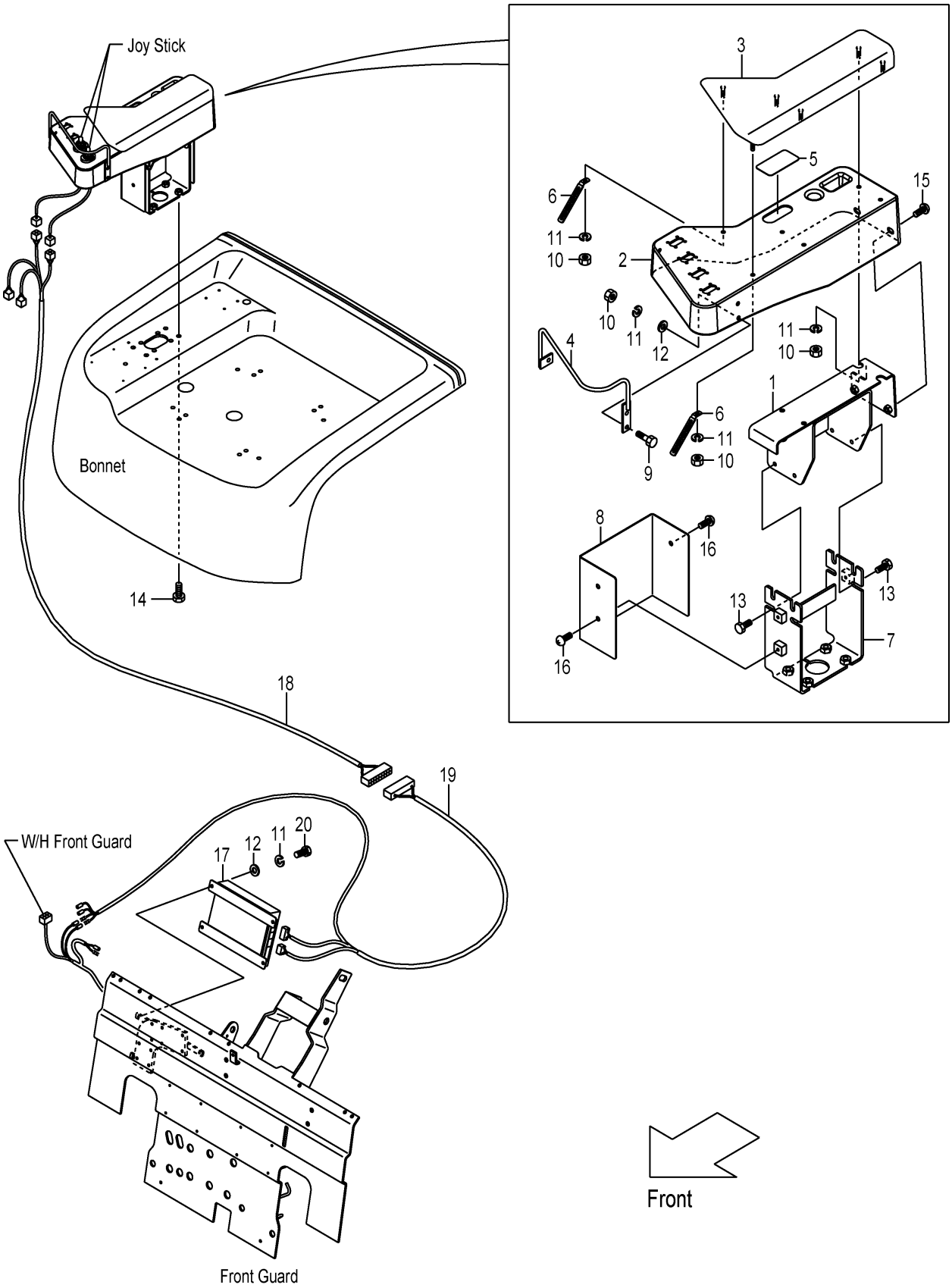

A:FHD15T3Z FHD18T3Z

Item No	Part No.	Mark	Description		Req'd	Remarks : Serial No.
1	583A2-B0401		BRACKET,ARMREST,UP	ﾌﾞﾗｹｯﾄ	1	[FIT]
2	583A2-B2621		COVER,JOY-STICK	ｶﾊﾞｰ	1	[FIT]
3	209P7-42151		ARMREST	ｱｰﾑﾚｽﾄ	1	[FIT]
4	209P7-42691		GUARD	ｶﾞｰﾄﾞ	1	[FIT]
5	209W7-42001		SEAL,PANEL-COVER	ｼｰﾙ	1	[FIT]
6	271A6-42601		CLIP	ｸﾘｯﾌﾟ	2	[FIT]
7	52N52-B0322		BRACKET,ARMREST,LOW	ﾌﾞﾗｹｯﾄ	1	[FIT]
8	52N52-B2071		COVER	ｶﾊﾞｰ	1	[FIT]
9	01181-06020		BOLT	ﾎﾞﾙﾄ	3	[FIT]
10	01400-00006		NUT	ﾅｯﾄ	9	[FIT]
11	02010-00006		WASHER	ﾜｯｼｬ	12	[FIT]
12	02000-00006		WASHER	ﾜｯｼｬ	6	[FIT]
13	01183-08016		BOLT	ﾎﾞﾙﾄ	4	[FIT]
14	01186-10025		BOLT	ﾎﾞﾙﾄ	4	[FIT]
15	278M6-42031		SCREW	ｽｸﾘｭ	2	[FIT]
16	214A6-42771		SCREW	ｽｸﾘｭ	3	[FIT]
17	209W2-40301		CONTROLLER,VALVE	ｺﾝﾄﾛｰﾗ	1	[FIT]
18	52N52-B2302		WIRE-HARNESS,J.STICK	ﾜｲﾔﾊｰﾈｽ	1	[FIT]
19	52N52-B2312		WIRE-HARNESS,CONTROL	ﾜｲﾔﾊｰﾈｽ	1	[FIT]
20	01100-06010		BOLT	ﾎﾞﾙﾄ	3	[FIT]

FIG.157 SPOOL SECTION (LIFT)

(F7Z173M0) スプールセクション

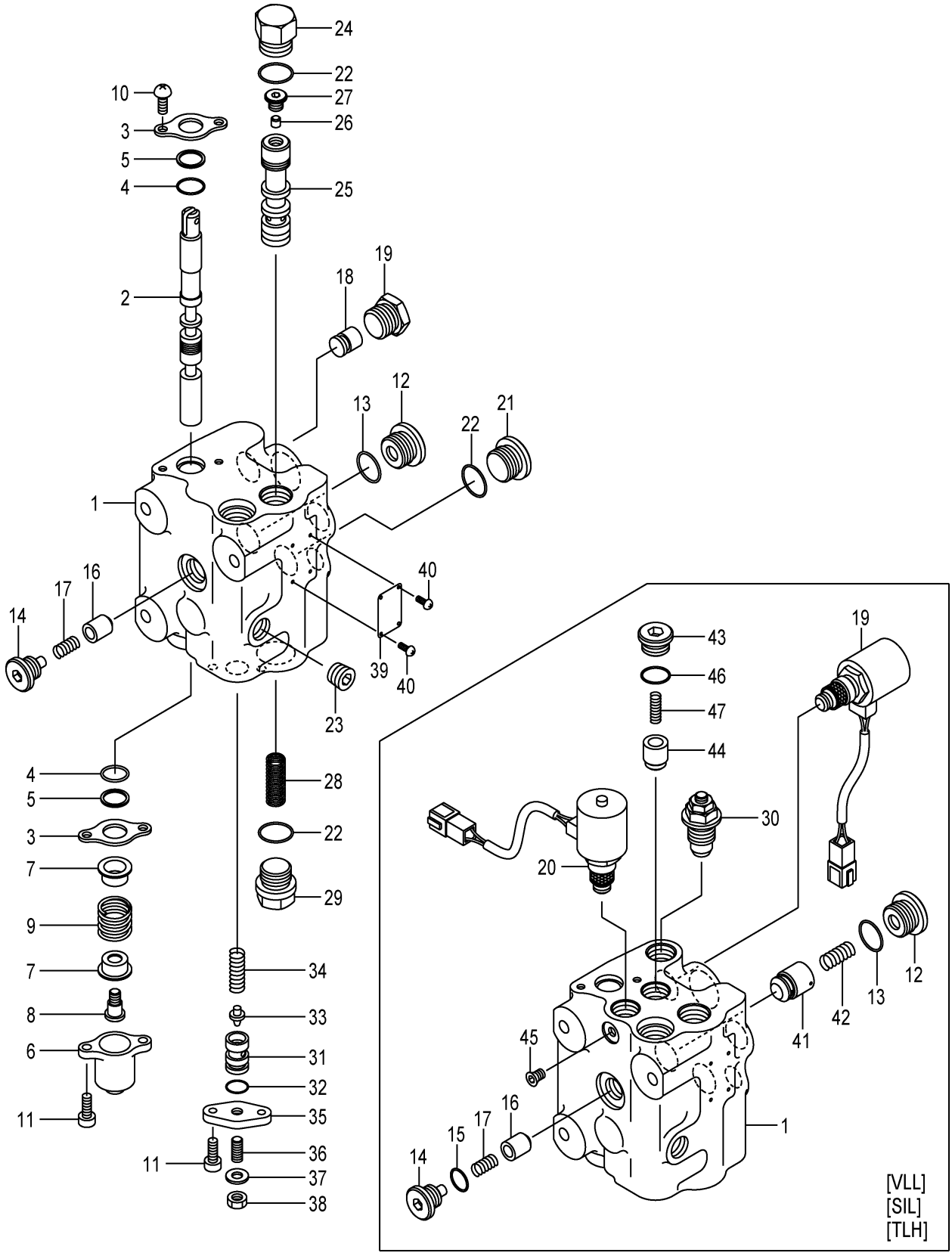

A:FHD15C3Z FHD18C3Z
B:FHD15T3Z FHD18T3Z

Item No	Part No.	Mark	Description		Req'd	Remarks : Serial No.
A1	B-C0213-31013		SECTION-ASSY,SPOOL,LIFT	ｽﾌﾟｰﾙｾｸｼｮﾝｱｯｾﾝ	1	INC.1-14,16-19,21-29,31-40
-	B-C0213-31026		SECTION-ASSY,SPOOL,LIFT	ｽﾌﾟｰﾙｾｸｼｮﾝｱｯｾﾝ	1	[VLL][SIL][TLH] INC.1-17,19-47
1	NO PART NO.	#	HOUSING,VALVE	ﾊｳｼﾞﾝｸﾞ	1	
-	NO PART NO.	#	HOUSING,VALVE	ﾊｳｼﾞﾝｸﾞ	1	[VLL][SIL][TLH]
2	NO PART NO.	#	SPOOL	ｽﾌﾟｰﾙ	1	
-	NO PART NO.	#	SPOOL	ｽﾌﾟｰﾙ	1	[VLL][SIL][TLH]
3	B-21011-31702		PLATE,SEAL	ﾌﾟﾚｰﾄ	2	
4	B-21001-00689		O-RING	Oﾘﾝｸﾞ	2	
5	B-21011-32801		WIPER	ﾜｲﾊﾟ	2	
6	B-21011-31011		CAP	ｷｬｯﾌﾟ	1	
7	B-21011-30702		SEAT,SPRING	ｼｰﾄ	2	
8	B-21011-30507		SCREW,CAP	ｽｸﾘｭ	1	
9	B-21011-30603		SPRING	ｽﾌﾟﾘﾝｸﾞ	1	
10	B-91111-60102		SCREW	ｽｸﾘｭ	2	
11	B-92703-06181		BOLT,SOCKET-HEAD	ﾎﾞﾙﾄ	4	
12	B-21001-90435		PLUG	ﾌﾟﾗｸﾞ	1	
13	B-95113-01800		O-RING	Oﾘﾝｸﾞ	1	
14	B-21003-00383		PLUG	ﾌﾟﾗｸﾞ	1	
-	B-97161-03121		PLUG	ﾌﾟﾗｸﾞ	1	[VLL][SIL][TLH]
15	B-95113-01400		O-RING	Oﾘﾝｸﾞ	1	[VLL][SIL][TLH]
16	B-21111-33114		POPPET	ﾎﾟﾍﾟｯﾄ	1	
17	B-21111-30515		SPRING	ｽﾌﾟﾘﾝｸﾞ	1	
18	B-C0853-00016		SPACER	ｽﾍﾟｰｻ	1	(WITHOUT VLL,SIL,TLH)
19	B-21003-00190		PLUG	ﾌﾟﾗｸﾞ	1	
-	B-C0853-00012		VALVE,SOLENOID	ﾊﾞﾙﾌﾞ	1	[VLL][SIL][TLH]
20	B-C0853-00013		VALVE,SOLENOID	ﾊﾞﾙﾌﾞ	1	[VLL][SIL][TLH]
21	B-20931-70503		PLUG	ﾌﾟﾗｸﾞ	1	
22	B-21001-00036		O-RING	Oﾘﾝｸﾞ	3	
23	B-21003-00381		PLUG	ﾌﾟﾗｸﾞ	1	
24	B-T1152-21302		PLUG	ﾌﾟﾗｸﾞ	1	
25	NO PART NO.	#	SPOOL	ｽﾌﾟｰﾙ	1	
26	B-T1411-06001		VALVE,CHECK	ﾊﾞﾙﾌﾞ	1	
27	B-T1171-09503		PLUG	ﾌﾟﾗｸﾞ	1	
28	B-21731-40501		SPRING	ｽﾌﾟﾘﾝｸﾞ	1	
29	B-T1151-21303		PLUG	ﾌﾟﾗｸﾞ	1	
30	B-C0003-30301		VALVE,SHUT-OFF	ﾊﾞﾙﾌﾞ	1	[VLL][SIL][TLH]
31	B-21731-30703		HOUSING	ﾊｳｼﾞﾝｸﾞ	1	
32	B-95111-01200		O-RING	Oﾘﾝｸﾞ	1	
33	B-21731-30502		POPPET	ﾎﾟﾍﾟｯﾄ	1	
34	B-21731-30306		SPRING	ｽﾌﾟﾘﾝｸﾞ	1	
35	B-21731-30406		PLATE	ﾌﾟﾚｰﾄ	1	
36	B-91511-08180		SCREW,SET	ｽｸﾘｭ	1	
37	B-94341-08162		WASHER	ﾜｯｼｬ	1	
38	B-93364-08052		NUT	ﾅｯﾄ	1	
39	NO PART NO.	#	PLATE,NAME	ﾌﾟﾚｰﾄ	1	
40	NO PART NO.	#	SCREW,DRIVE	ｽｸﾘｭ	2	
41	B-T1411-17003		POPPET	ﾎﾟﾍﾟｯﾄ	1	[VLL][SIL][TLH]
42	B-T1461-10014		SPRING	ｽﾌﾟﾘﾝｸﾞ	1	[VLL][SIL][TLH]
43	B-T1151-19301		PLUG	ﾌﾟﾗｸﾞ	1	[VLL][SIL][TLH]
44	B-T1411-16002		POPPET	ﾎﾟﾍﾟｯﾄ	1	[VLL][SIL][TLH]

FIG.157 SPOOL SECTION (LIFT)

(F7Z173M0) スプールセクション

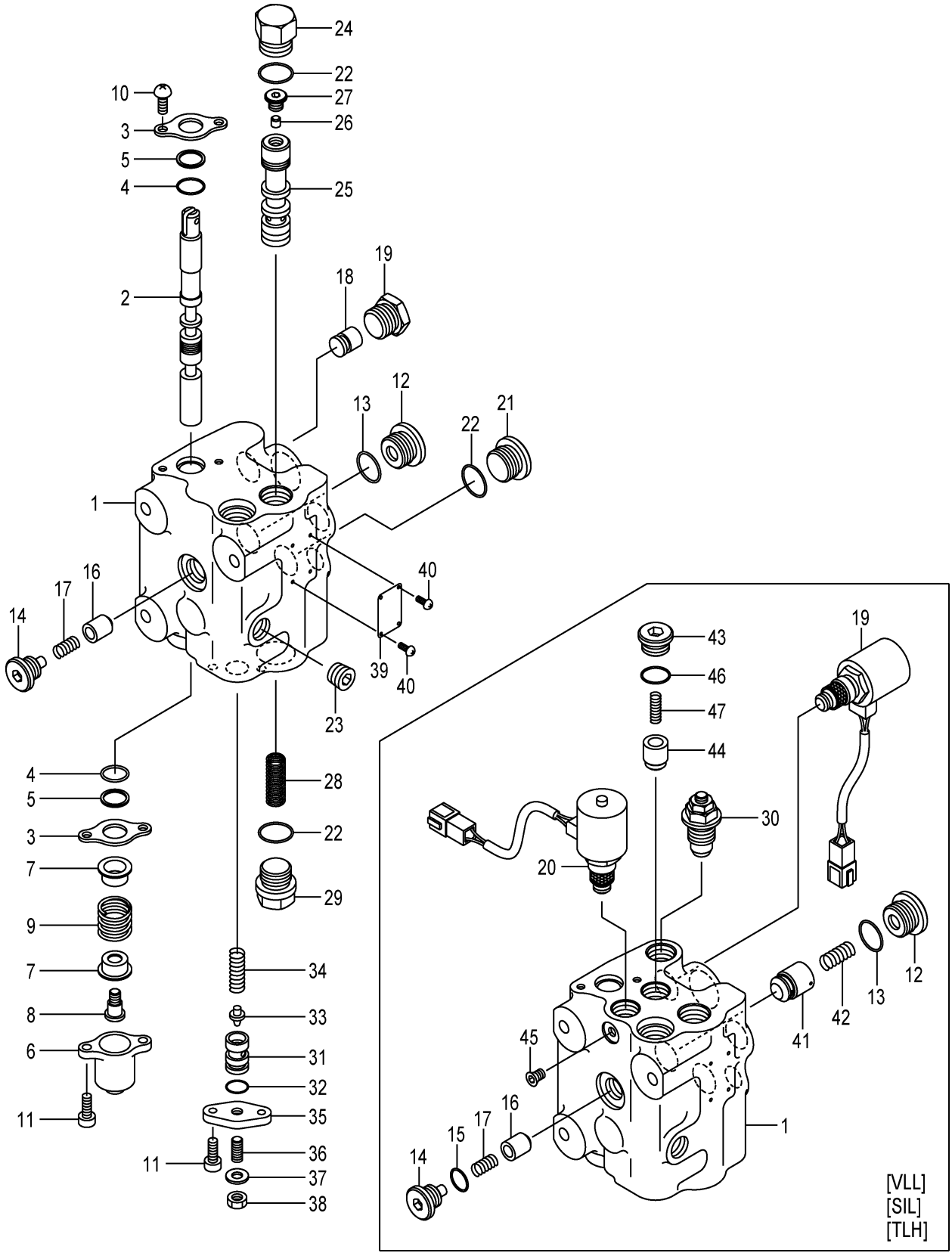

A:FHD15C3Z FHD18C3Z
B:FHD15T3Z FHD18T3Z

Item No	Part No.	Mark	Description		Req'd	Remarks : Serial No.
45	NO PART NO.	#	PLUG	ﾌﾟﾗｸﾞ	1	[VLL][SIL][TLH]
46	B-21001-00035		O-RING	Oﾘﾝｸﾞ	1	[VLL][SIL][TLH]
47	B-T1461-05004		SPRING	ｽﾌﾟﾘﾝｸﾞ	1	[VLL][SIL][TLH]

FIG.158 SPOOL SECTION (LIFT)(TOR-CON):[FIT]

(F7Z173S0) スプールセクション

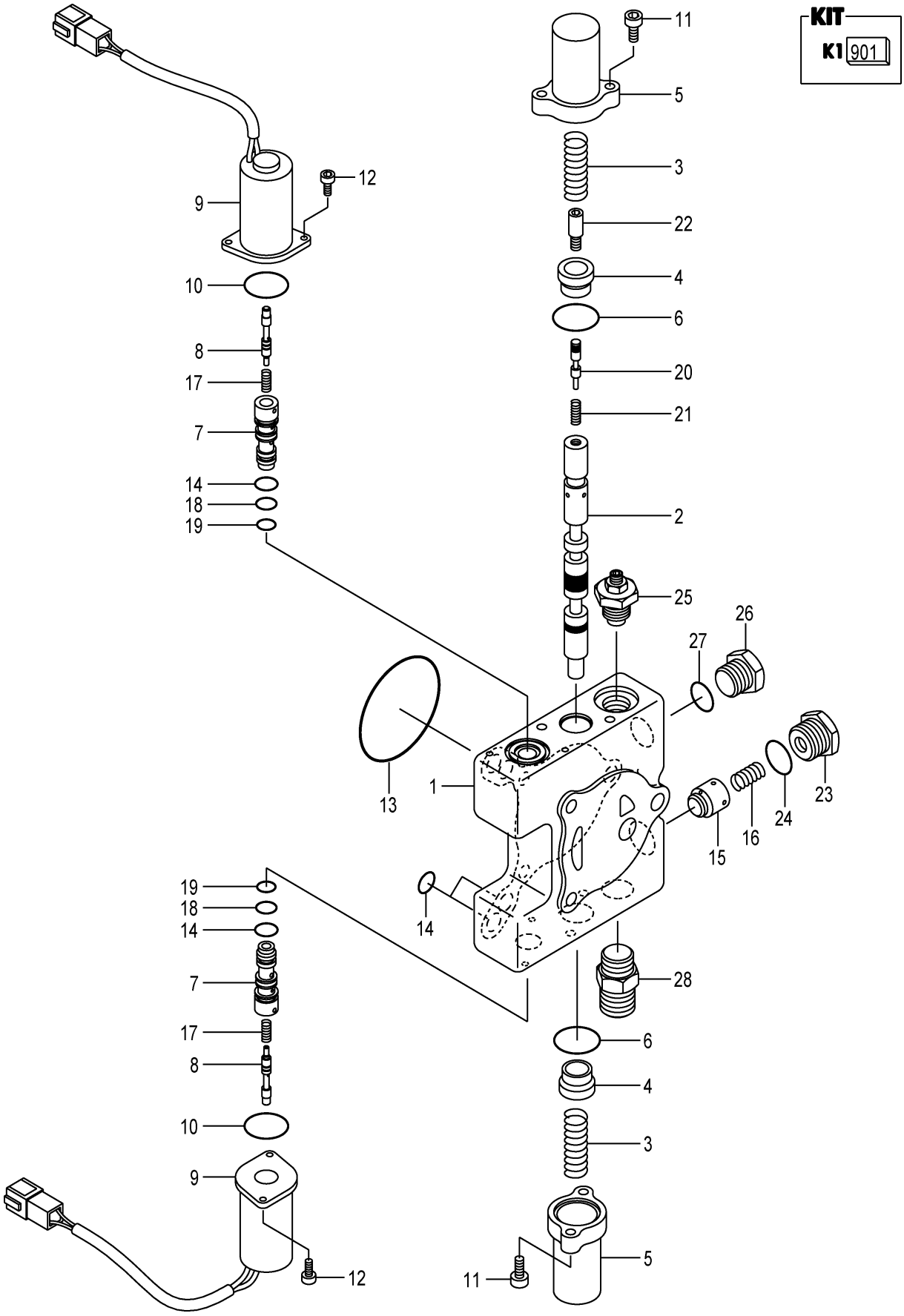

A:FHD15T3Z FHD18T3Z

Item No	Part No.	Mark	Description		Req'd	Remarks : Serial No.
A1	B-C0013-31629		SECTION-ASSY,SPOOL,LIFT	ｽﾌﾟｰﾙｾｸｼｮﾝｱｯｾﾝ	1	[FIT] INC.1-28
901	B-C001B-30087	K1	KIT,SLEEVE	ｽﾘｰﾌﾞｷｯﾄ	2	[FIT] INC.7,8,14,18,19
1	NO PART NO.	#	HOUSING,VALVE	ﾊｳｼﾞﾝｸﾞ	1	[FIT]
2	NO PART NO.	#	SPOOL	ｽﾌﾟｰﾙ	1	[FIT]
3	B-T1461-16006		SPRING	ｽﾌﾟﾘﾝｸﾞ	2	[FIT]
4	B-21011-30740		SEAT,SPRING	ｼｰﾄ	2	[FIT]
5	B-C0001-32029		CAP	ｷｬｯﾌﾟ	2	[FIT]
6	B-95151-02400		O-RING	Oﾘﾝｸﾞ	2	[FIT]
7	B-T1331-11003	*	SLEEVE	ｽﾘｰﾌﾞ	2	[FIT]
8	B-T1441-04001	*	SHUTTLE	ｼｬﾄﾙ	2	[FIT]
9	B-25513-10158		SOLENOID	ｿﾚﾉｲﾄﾞ	2	[FIT]
10	B-95111-02200		O-RING	Oﾘﾝｸﾞ	2	[FIT]
11	B-92703-06181		BOLT,SOCKET-HEAD	ﾎﾞﾙﾄ	4	[FIT]
12	B-92703-05101		BOLT,SOCKET-HEAD	ﾎﾞﾙﾄ	4	[FIT]
13	B-21001-00106		O-RING	Oﾘﾝｸﾞ	1	[FIT]
14	B-95151-00900	*	O-RING	Oﾘﾝｸﾞ	6	[FIT]
15	B-T1411-17004		POPPET	ﾎﾟﾍﾟｯﾄ	1	[FIT]
16	B-21011-36502		SPRING	ｽﾌﾟﾘﾝｸﾞ	1	[FIT]
17	B-T1461-03002		SPRING	ｽﾌﾟﾘﾝｸﾞ	2	[FIT]
18	B-95151-00800	*	O-RING	Oﾘﾝｸﾞ	2	[FIT]
19	B-95151-00700	*	O-RING	Oﾘﾝｸﾞ	2	[FIT]
20	NO PART NO.	#	VALVE	ﾊﾞﾙﾌﾞ	1	[FIT]
21	B-T1461-05002		SPRING	ｽﾌﾟﾘﾝｸﾞ	1	[FIT]
22	B-C0001-32504		HEAD,SPOOL	ﾍｯﾄﾞ	1	[FIT]
23	B-21001-90435		PLUG	ﾌﾟﾗｸﾞ	1	[FIT]
24	B-95113-01800		O-RING	Oﾘﾝｸﾞ	1	[FIT]
25	B-21013-30681		VALVE,SHUT-OFF	ﾊﾞﾙﾌﾞ	1	[FIT]
26	B-21001-00128		PLUG	ﾌﾟﾗｸﾞ	1	[FIT]
27	B-21001-00035		O-RING	Oﾘﾝｸﾞ	1	[FIT]
28	B-C0003-06808		CONNECTOR	ｺﾈｸﾀ	1	[FIT]

FIG.159 SPOOL SECTION (LIFT)[VLS]

(F7Z173V0) スプールセクション

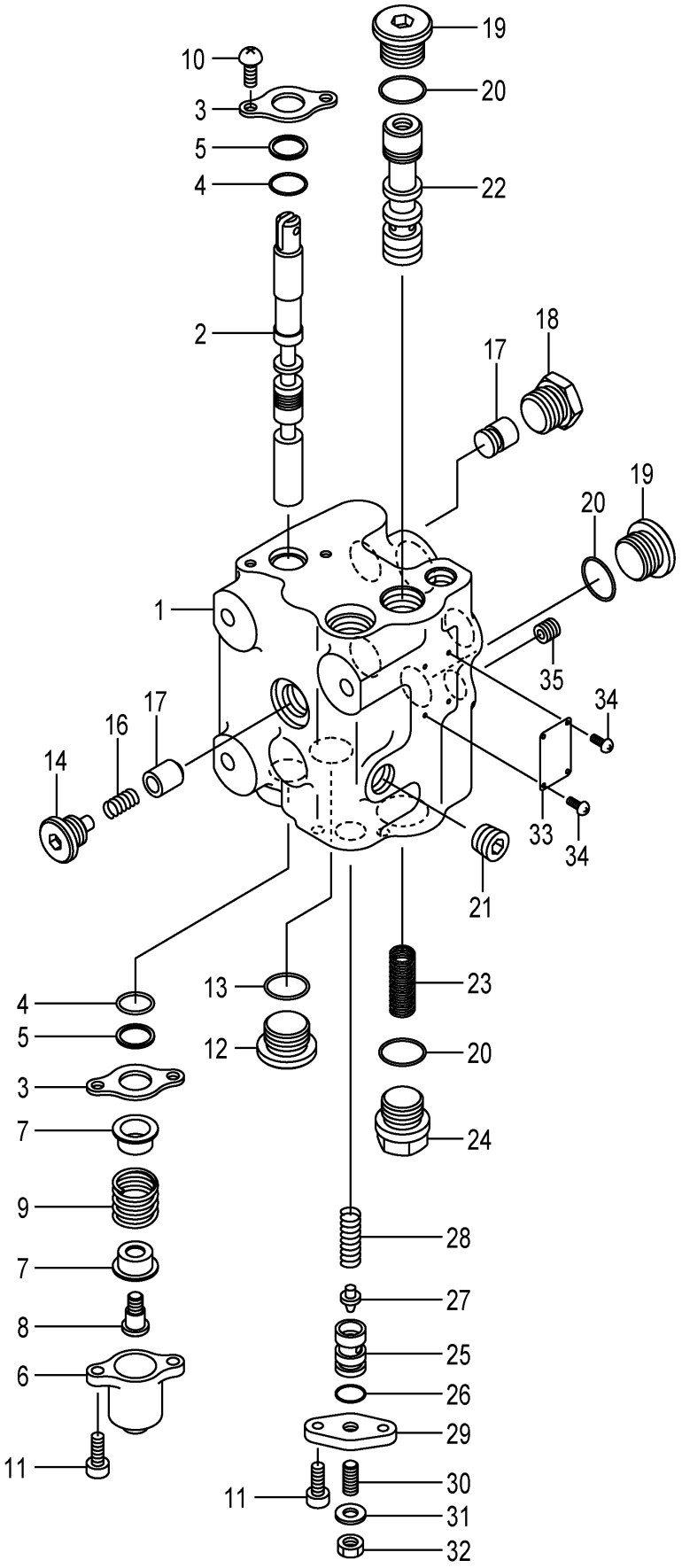

A:FHD15C3Z FHD15T3Z FHD18C3Z FHD18T3Z

Item No	Part No.	Mark	Description		Req'd	Remarks : Serial No.
A1	B-C0213-31033		SECTION-ASSY,SPOOL,LIFT	ｽﾌﾟｰﾙｾｸｼｮﾝｱｯｾﾝ	1	[VLS] INC.1-35
1	NO PART NO.	#	HOUSING,VALVE	ﾊｳｼﾞﾝｸﾞ	1	[VLS]
2	NO PART NO.	#	SPOOL	ｽﾌﾟｰﾙ	1	[VLS]
3	B-21011-31702		PLATE,SEAL	ﾌﾟﾚｰﾄ	2	[VLS]
4	B-21001-00689		O-RING	Oﾘﾝｸﾞ	2	[VLS]
5	B-21011-32801		WIPER	ﾜｲﾊﾟ	2	[VLS]
6	B-21011-31011		CAP	ｷｬｯﾌﾟ	1	[VLS]
7	B-21011-30702		SEAT,SPRING	ｼｰﾄ	2	[VLS]
8	B-21011-30507		SCREW,CAP	ｽｸﾘｭ	1	[VLS]
9	B-21011-30603		SPRING	ｽﾌﾟﾘﾝｸﾞ	1	[VLS]
10	B-91111-60102		SCREW	ｽｸﾘｭ	2	[VLS]
11	B-92703-06181		BOLT,SOCKET-HEAD	ﾎﾞﾙﾄ	4	[VLS]
12	B-97161-04161		PLUG	ﾌﾟﾗｸﾞ	1	[VLS]
13	B-95113-01800		O-RING	Oﾘﾝｸﾞ	1	[VLS]
14	B-21003-00383		PLUG	ﾌﾟﾗｸﾞ	1	[VLS]
15	B-21111-33114		POPPET	ﾎﾟﾍﾟｯﾄ	1	[VLS]
16	B-21111-30515		SPRING	ｽﾌﾟﾘﾝｸﾞ	1	[VLS]
17	B-C0853-00016		SPACER	ｽﾍﾟｰｻ	1	[VLS]
18	B-21003-00190		PLUG	ﾌﾟﾗｸﾞ	1	[VLS]
19	B-20931-70503		PLUG	ﾌﾟﾗｸﾞ	2	[VLS]
20	B-21001-00036		O-RING	Oﾘﾝｸﾞ	3	[VLS]
21	B-21003-00381		PLUG	ﾌﾟﾗｸﾞ	1	[VLS]
22	NO PART NO.	#	SPOOL	ｽﾌﾟｰﾙ	1	[VLS]
23	B-21731-40501		SPRING	ｽﾌﾟﾘﾝｸﾞ	1	[VLS]
24	B-T1151-21303		PLUG	ﾌﾟﾗｸﾞ	1	[VLS]
25	B-21731-30703		HOUSING	ﾊｳｼﾞﾝｸﾞ	1	[VLS]
26	B-95111-01200		O-RING	Oﾘﾝｸﾞ	1	[VLS]
27	B-21731-30502		POPPET	ﾎﾟﾍﾟｯﾄ	1	[VLS]
28	B-21731-30306		SPRING	ｽﾌﾟﾘﾝｸﾞ	1	[VLS]
29	B-21731-30406		PLATE	ﾌﾟﾚｰﾄ	1	[VLS]
30	B-91511-08180		SCREW,SET	ｽｸﾘｭ	1	[VLS]
31	B-94341-08162		WASHER	ﾜｯｼｬ	1	[VLS]
32	B-93364-08052		NUT	ﾅｯﾄ	1	[VLS]
33	NO PART NO.	#	PLATE,NAME	ﾌﾟﾚｰﾄ	1	[VLS]
34	NO PART NO.	#	SCREW,DRIVE	ｽｸﾘｭ	2	[VLS]
35	B-T1172-00608		PLUG,ORIFICE	ﾌﾟﾗｸﾞ	1	[VLS]

FIG.160 SPOOL SECTION (TILT)

(F7Z173N0) スプールセクション

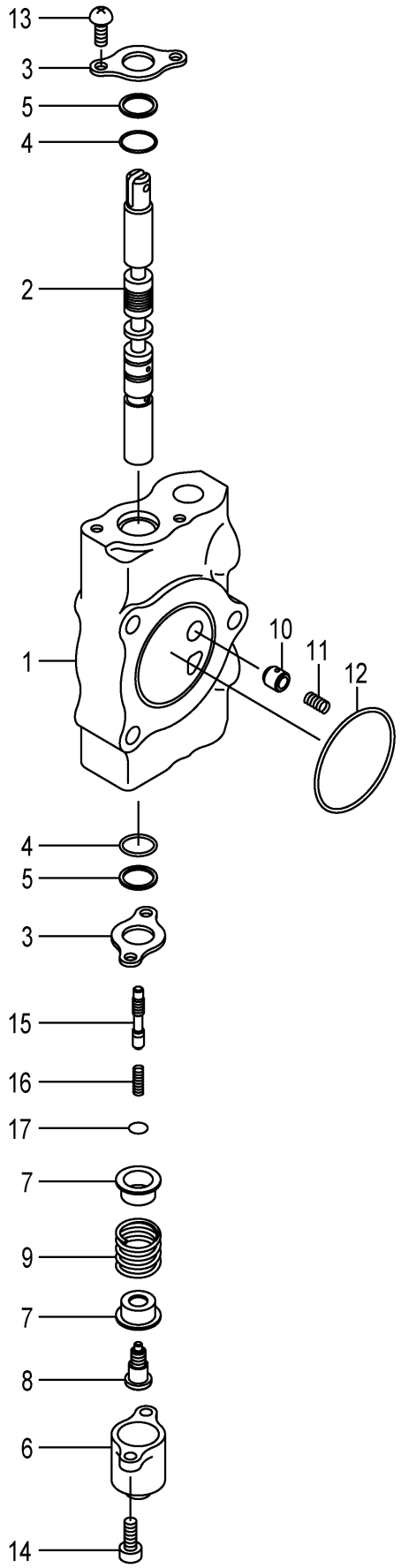

A:FHD15C3Z FHD15T3Z FHD18C3Z FHD18T3Z

Item No	Part No.	Mark	Description		Req'd	Remarks : Serial No.
A1	B-C0213-31272		SECTION-ASSY,SPOOL,TILT	ｽﾌﾟｰﾙｾｸｼｮﾝｱｯｾﾝ	1	INC.1-17
-	B-C0213-31259		SECTION-ASSY,SPOOL,TILT	ｽﾌﾟｰﾙｾｸｼｮﾝｱｯｾﾝ	1	[3SV][4SV][5SV] INC.1-17
1	NO PART NO.	#	HOUSING,VALVE	ﾊｳｼﾞﾝｸﾞ	1	
-	NO PART NO.	#	HOUSING,VALVE	ﾊｳｼﾞﾝｸﾞ	1	[3SV][4SV][5SV]
2	NO PART NO.	#	SPOOL	ｽﾌﾟｰﾙ	1	
3	B-21011-31702		PLATE,SEAL	ﾌﾟﾚｰﾄ	2	
4	B-21001-00689		O-RING	Oﾘﾝｸﾞ	2	
5	B-21011-32801		WIPER	ﾜｲﾊﾟ	2	
6	B-21011-31011		CAP,SPOOL	ｷｬｯﾌﾟ	1	
7	B-21011-30702		SEAT,SPRING	ｼｰﾄ	2	
8	B-21011-30528		SCREW,CAP	ｽｸﾘｭ	1	
9	B-21011-30603		SPRING,SPOOL	ｽﾌﾟﾘﾝｸﾞ	1	
10	B-21011-32404		POPPET,CHECK-VALVE	ﾎﾟﾍﾟｯﾄ	1	
11	B-21011-30604		SPRING,CHECK-VALVE	ｽﾌﾟﾘﾝｸﾞ	1	
12	B-21001-00106		O-RING	Oﾘﾝｸﾞ	1	
13	B-91111-60102		SCREW	ｽｸﾘｭ	2	
14	B-92703-06181		BOLT,SOCKET-HEAD	ﾎﾞﾙﾄ	2	
15	NO PART NO.	#	VALVE	ﾊﾞﾙﾌﾞ	1	
16	B-21011-30618		SPRING	ｽﾌﾟﾘﾝｸﾞ	1	
17	B-95133-00500		O-RING	Oﾘﾝｸﾞ	1	

FIG.161 SPOOL SECTION (TILT)(TOR-CON):[FIT]

(F7Z173T0) スプールセクション

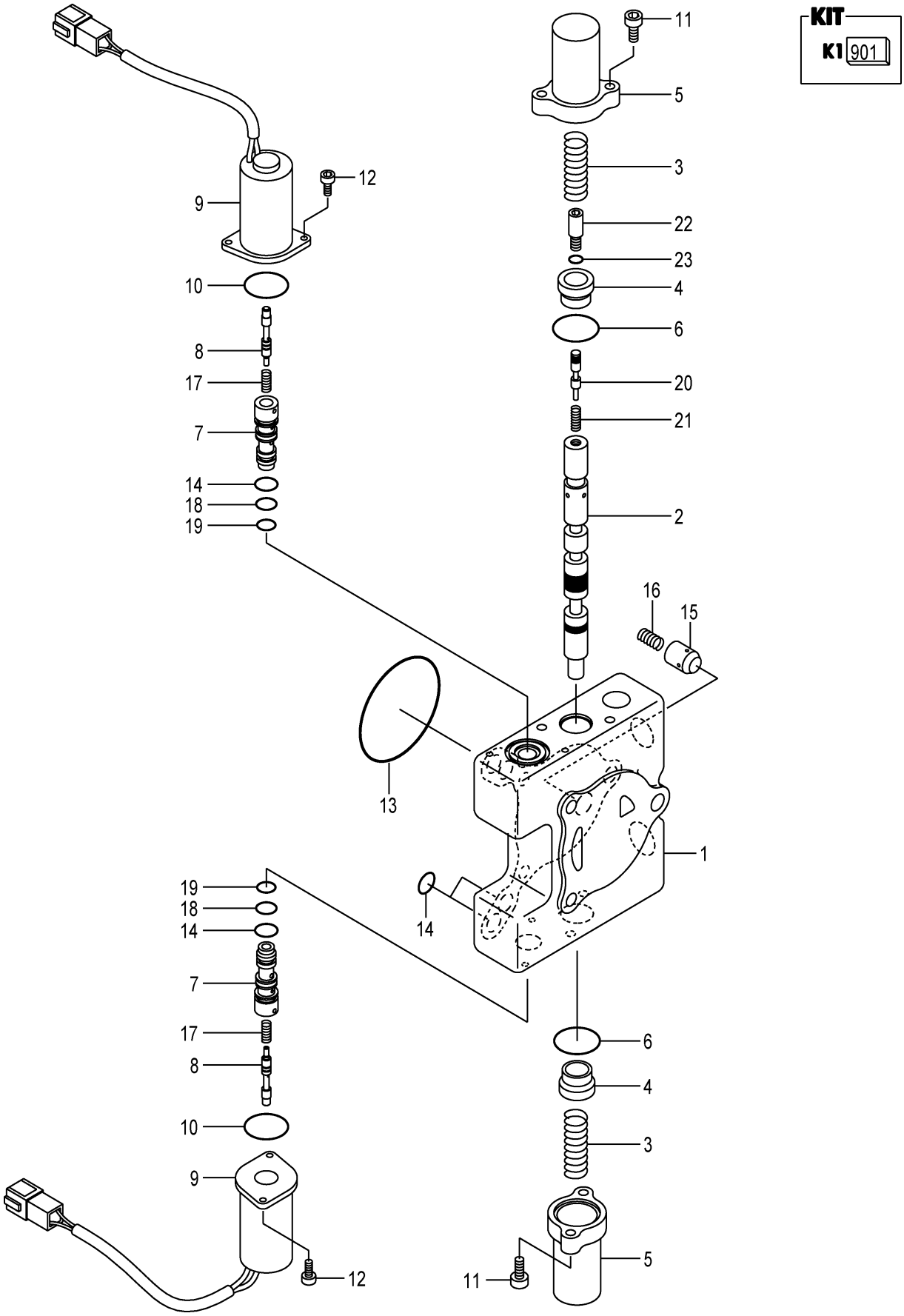

A:FHD15T3Z FHD18T3Z

Item No	Part No.	Mark	Description		Req'd	Remarks : Serial No.
A1	B-C0013-31451		SECTION-ASSY,SPOOL,TILT	ｽﾌﾟｰﾙｾｸｼｮﾝｱｯｾﾝ	1	[FIT] INC.1-23
901	B-C001B-30076	K1	KIT,SLEEVE	ｽﾘｰﾌﾞｷｯﾄ	2	[FIT] INC.7,8,14,18,19
1	NO PART NO.	#	HOUSING,VALVE	ﾊｳｼﾞﾝｸﾞ	1	[FIT]
2	NO PART NO.	#	SPOOL	ｽﾌﾟｰﾙ	1	[FIT]
3	B-T1461-16006		SPRING	ｽﾌﾟﾘﾝｸﾞ	2	[FIT]
4	B-21011-30740		SEAT,SPRING	ｼｰﾄ	2	[FIT]
5	B-C0001-32029		CAP	ｷｬｯﾌﾟ	2	[FIT]
6	B-95151-02400		O-RING	Oﾘﾝｸﾞ	2	[FIT]
7	B-T1331-11001	*	SLEEVE	ｽﾘｰﾌﾞ	2	[FIT]
8	B-T1441-04001	*	SHUTTLE	ｼｬﾄﾙ	2	[FIT]
9	B-25513-10158		SOLENOID	ｿﾚﾉｲﾄﾞ	2	[FIT]
10	B-95111-02200		O-RING	Oﾘﾝｸﾞ	2	[FIT]
11	B-92703-06181		BOLT,SOCKET-HEAD	ﾎﾞﾙﾄ	4	[FIT]
12	B-92703-05101		BOLT,SOCKET-HEAD	ﾎﾞﾙﾄ	4	[FIT]
13	B-21001-00106		O-RING	Oﾘﾝｸﾞ	1	[FIT]
14	B-95151-00900	*	O-RING	Oﾘﾝｸﾞ	6	[FIT]
15	B-21011-32404		POPPET	ﾎﾟﾍﾟｯﾄ	1	[FIT]
16	B-21011-30604		SPRING	ｽﾌﾟﾘﾝｸﾞ	1	[FIT]
17	B-T1461-03002		SPRING	ｽﾌﾟﾘﾝｸﾞ	2	[FIT]
18	B-95151-00800	*	O-RING	Oﾘﾝｸﾞ	2	[FIT]
19	B-95151-00700	*	O-RING	Oﾘﾝｸﾞ	2	[FIT]
20	NO PART NO.	#	VALVE	ﾊﾞﾙﾌﾞ	1	[FIT]
21	B-21011-30618		SPRING	ｽﾌﾟﾘﾝｸﾞ	1	[FIT]
22	B-C0001-32503		HEAD,SPOOL	ﾍｯﾄﾞ	1	[FIT]
23	B-95133-00500		O-RING	Oﾘﾝｸﾞ	1	[FIT]

FIG.162 SPOOL SECTION (TILT)[VLS]

(F7Z173W0) スプールセクション

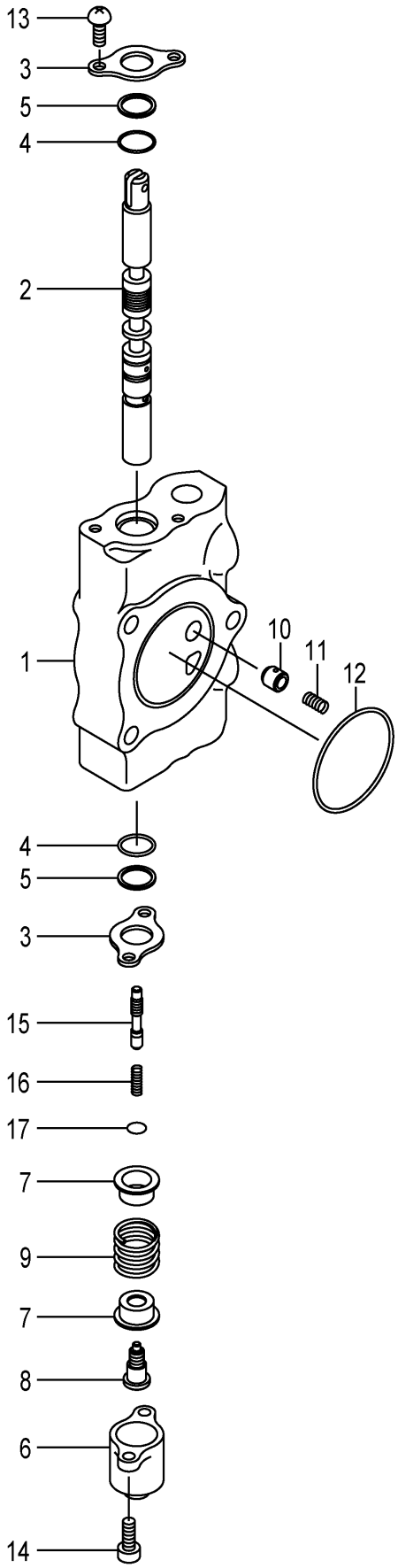

A:FHD15C3Z FHD15T3Z FHD18C3Z FHD18T3Z

Item No	Part No.	Mark	Description		Req'd	Remarks : Serial No.
A1	B-C0213-31276		SECTION-ASSY,SPOOL,TILT	ｽﾌﾟｰﾙｾｸｼｮﾝｱｯｾﾝ	1	[VLS] INC.1-17
-	B-C0213-31275		SECTION-ASSY,SPOOL,TILT	ｽﾌﾟｰﾙｾｸｼｮﾝｱｯｾﾝ	1	[3SV/VLS][4SV/VLS][5SV/VLS] INC.1-17
1	NO PART NO.	#	HOUSING,VALVE	ﾊｳｼﾞﾝｸﾞ	1	[VLS]
-	NO PART NO.	#	HOUSING,VALVE	ﾊｳｼﾞﾝｸﾞ	1	[3SV/VLS][4SV/VLS][5SV/VLS]
2	NO PART NO.	#	SPOOL	ｽﾌﾟｰﾙ	1	[VLS]
3	B-21011-31702		PLATE,SEAL	ﾌﾟﾚｰﾄ	2	[VLS]
4	B-21001-00689		O-RING	Oﾘﾝｸﾞ	2	[VLS]
5	B-21011-32801		WIPER	ﾜｲﾊﾟ	2	[VLS]
6	B-21011-32047		CAP,SPOOL	ｷｬｯﾌﾟ	1	[VLS]
7	B-21011-30702		SEAT,SPRING	ｼｰﾄ	2	[VLS]
8	B-21011-30528		SCREW,CAP	ｽｸﾘｭ	1	[VLS]
9	B-21011-30603		SPRING,SPOOL	ｽﾌﾟﾘﾝｸﾞ	1	[VLS]
10	B-21011-32404		POPPET,CHECK-VALVE	ﾎﾟﾍﾟｯﾄ	1	[VLS]
11	B-21011-30604		SPRING,CHECK-VALVE	ｽﾌﾟﾘﾝｸﾞ	1	[VLS]
12	B-21001-00106		O-RING	Oﾘﾝｸﾞ	1	[VLS]
13	B-91111-60102		SCREW	ｽｸﾘｭ	2	[VLS]
14	B-92703-06181		BOLT,SOCKET-HEAD	ﾎﾞﾙﾄ	2	[VLS]
15	NO PART NO.	#	VALVE	ﾊﾞﾙﾌﾞ	1	[VLS]
16	B-21011-30618		SPRING	ｽﾌﾟﾘﾝｸﾞ	1	[VLS]
17	B-95133-00500		O-RING	Oﾘﾝｸﾞ	1	[VLS]

FIG.163 SPOOL SECTION (ATT)[3SV][4SV][5SV]

(F7Z173P0) スプールセクション

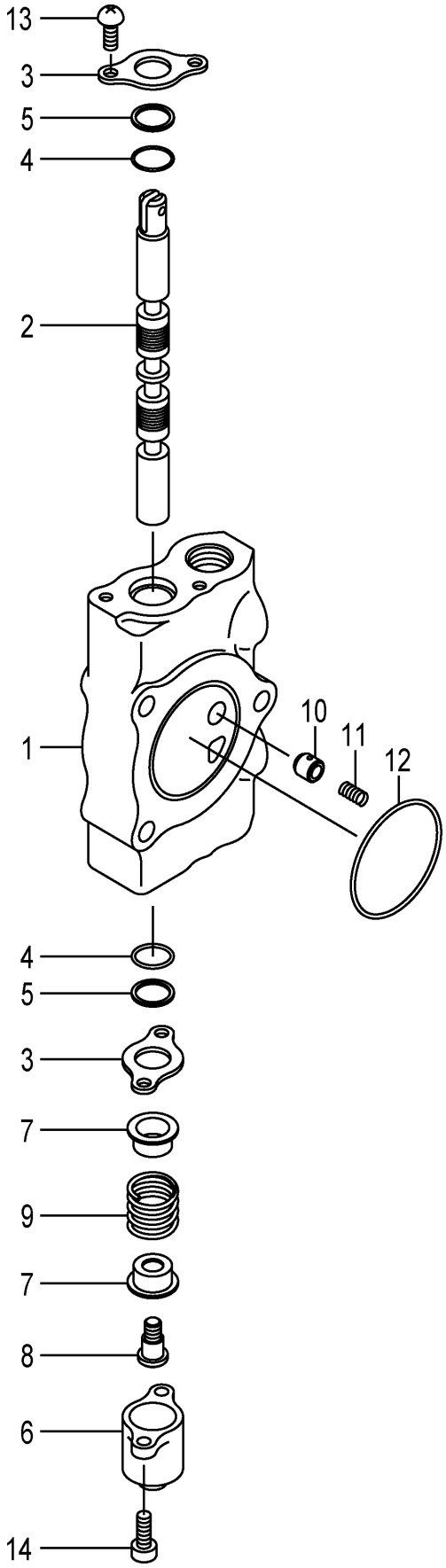

A:FHD15C3Z FHD15T3Z FHD18C3Z FHD18T3Z

Item No	Part No.	Mark	Description		Req'd	Remarks : Serial No.
A1	B-C0213-31260		SECTION-ASSY,SPOOL,ATT	ｽﾌﾟｰﾙｾｸｼｮﾝｱｯｾﾝ	1	[3SV] INC.1-14
-	B-C0213-31273		SECTION-ASSY,SPOOL,ATT	ｽﾌﾟｰﾙｾｸｼｮﾝｱｯｾﾝ	1	[4SV] INC.1-14
-	B-C0213-31273		SECTION-ASSY,SPOOL,ATT	ｽﾌﾟｰﾙｾｸｼｮﾝｱｯｾﾝ	2	[5SV] INC.1-14
1	NO PART NO.	#	HOUSING,VALVE	ﾊｳｼﾞﾝｸﾞ	1	[3SV]
-	NO PART NO.	#	HOUSING,VALVE	ﾊｳｼﾞﾝｸﾞ	1	[4SV]
-	NO PART NO.	#	HOUSING,VALVE	ﾊｳｼﾞﾝｸﾞ	2	[5SV]
2	NO PART NO.	#	SPOOL	ｽﾌﾟｰﾙ	1	[3SV][4SV]
-	NO PART NO.	#	SPOOL	ｽﾌﾟｰﾙ	2	[5SV]
3	B-21011-31702		PLATE,SEAL	ﾌﾟﾚｰﾄ	2	[3SV][4SV]
-	B-21011-31702		PLATE,SEAL	ﾌﾟﾚｰﾄ	4	[5SV]
4	B-21001-00689		O-RING	Oﾘﾝｸﾞ	2	[3SV][4SV]
-	B-21001-00689		O-RING	Oﾘﾝｸﾞ	4	[5SV]
5	B-21011-32801		WIPER	ﾜｲﾊﾟ	2	[3SV][4SV]
-	B-21011-32801		WIPER	ﾜｲﾊﾟ	4	[5SV]
6	B-21011-31011		CAP,SPOOL	ｷｬｯﾌﾟ	1	[3SV][4SV]
-	B-21011-31011		CAP,SPOOL	ｷｬｯﾌﾟ	2	[5SV]
7	B-21011-30702		SEAT,SPRING	ｼｰﾄ	2	[3SV][4SV]
-	B-21011-30702		SEAT,SPRING	ｼｰﾄ	4	[5SV]
8	B-21011-30507		SCREW,CAP	ｽｸﾘｭ	1	[3SV][4SV]
-	B-21011-30507		SCREW,CAP	ｽｸﾘｭ	2	[5SV]
9	B-21011-30603		SPRING,SPOOL	ｽﾌﾟﾘﾝｸﾞ	1	[3SV][4SV]
-	B-21011-30603		SPRING,SPOOL	ｽﾌﾟﾘﾝｸﾞ	2	[5SV]
10	B-21011-32404		POPPET,CHECK-VALVE	ﾎﾟﾍﾟｯﾄ	1	[3SV][4SV]
-	B-21011-32404		POPPET,CHECK-VALVE	ﾎﾟﾍﾟｯﾄ	2	[5SV]
11	B-21011-30604		SPRING,CHECK-VALVE	ｽﾌﾟﾘﾝｸﾞ	1	[3SV][4SV]
-	B-21011-30604		SPRING,CHECK-VALVE	ｽﾌﾟﾘﾝｸﾞ	2	[5SV]
12	B-21001-00106		O-RING	Oﾘﾝｸﾞ	1	[3SV][4SV]
-	B-21001-00106		O-RING	Oﾘﾝｸﾞ	2	[5SV]
13	B-91111-60102		SCREW	ｽｸﾘｭ	2	[3SV][4SV]
-	B-91111-60102		SCREW	ｽｸﾘｭ	4	[5SV]
14	B-92703-06181		BOLT,SOCKET-HEAD	ﾎﾞﾙﾄ	2	[3SV][4SV]
-	B-92703-06181		BOLT,SOCKET-HEAD	ﾎﾞﾙﾄ	4	[5SV]

FIG.164 SPOOL SECTION (ATT)[4SV][5SV]

(F7Z173Q0) スプールセクション

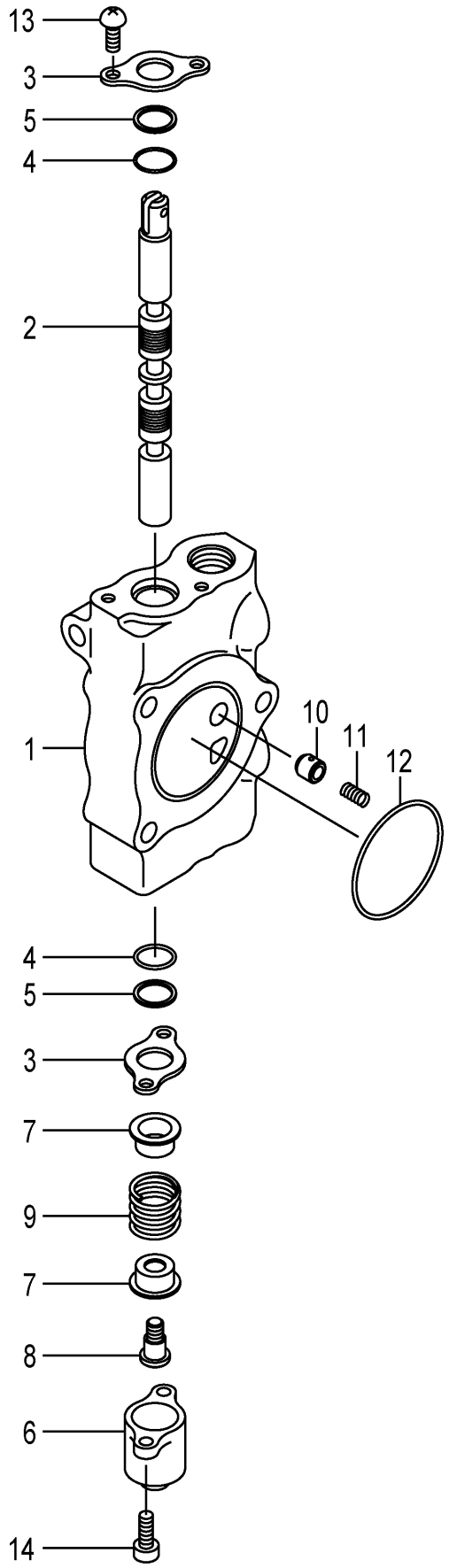

A:FHD15C3Z FHD15T3Z FHD18C3Z FHD18T3Z

Item No	Part No.	Mark	Description		Req'd	Remarks : Serial No.
A1	B-C0213-31274		SECTION-ASSY,SPOOL,ATT	ｽﾌﾟｰﾙｾｸｼｮﾝｱｯｾﾝ	1	[4SV][5SV](WITHOUT 4SV/FIT) INC.1-14
1	NO PART NO.	#	HOUSING,VALVE	ﾊｳｼﾞﾝｸﾞ	1	[4SV][5SV](WITHOUT 4SV/FIT)
2	NO PART NO.	#	SPOOL	ｽﾌﾟｰﾙ	1	[4SV][5SV](WITHOUT 4SV/FIT)
3	B-21011-31702		PLATE,SEAL	ﾌﾟﾚｰﾄ	2	[4SV][5SV](WITHOUT 4SV/FIT)
4	B-21001-00689		O-RING	Oﾘﾝｸﾞ	2	[4SV][5SV](WITHOUT 4SV/FIT)
5	B-21011-32801		WIPER	ﾜｲﾊﾟ	2	[4SV][5SV](WITHOUT 4SV/FIT)
6	B-21011-31011		CAP,SPOOL	ｷｬｯﾌﾟ	1	[4SV][5SV](WITHOUT 4SV/FIT)
7	B-21011-30702		SEAT,SPRING	ｼｰﾄ	2	[4SV][5SV](WITHOUT 4SV/FIT)
8	B-21011-30507		SCREW,CAP	ｽｸﾘｭ	1	[4SV][5SV](WITHOUT 4SV/FIT)
9	B-21011-30603		SPRING,SPOOL	ｽﾌﾟﾘﾝｸﾞ	1	[4SV][5SV](WITHOUT 4SV/FIT)
10	B-21011-32404		POPPET,CHECK-VALVE	ﾎﾟﾍﾟｯﾄ	1	[4SV][5SV](WITHOUT 4SV/FIT)
11	B-21011-30604		SPRING,CHECK-VALVE	ｽﾌﾟﾘﾝｸﾞ	1	[4SV][5SV](WITHOUT 4SV/FIT)
12	B-21001-00106		O-RING	Oﾘﾝｸﾞ	1	[4SV][5SV](WITHOUT 4SV/FIT)
13	B-91111-60102		SCREW	ｽｸﾘｭ	2	[4SV][5SV](WITHOUT 4SV/FIT)
14	B-92703-06181		BOLT,SOCKET-HEAD	ﾎﾞﾙﾄ	2	[4SV][5SV](WITHOUT 4SV/FIT)

FIG.165 INLET SECTION (TOR-CON):[FIT]

(F7Z173R0) インレットセクション

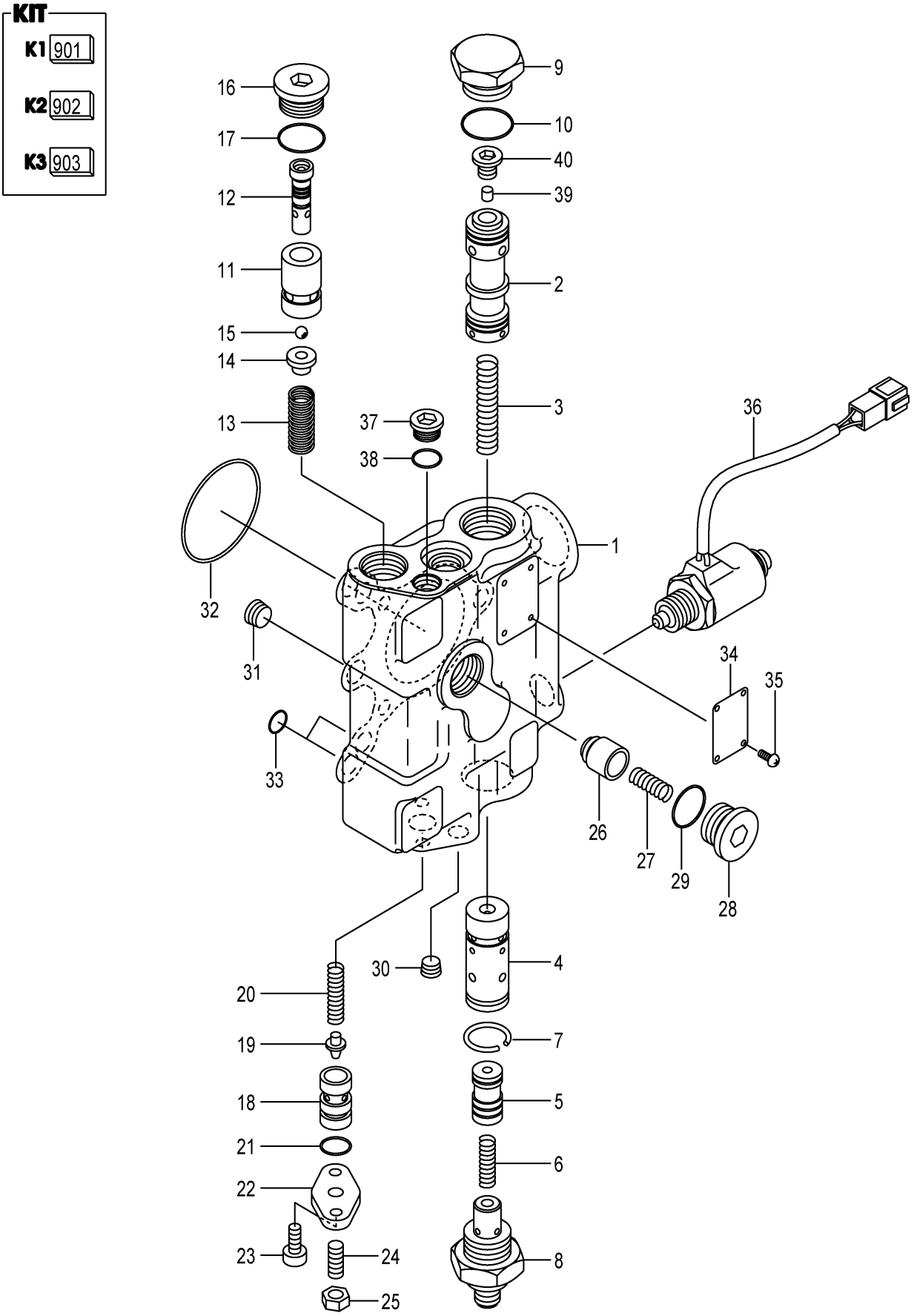

A:FHD15T3Z FHD18T3Z

Item No	Part No.	Mark	Description		Req'd	Remarks : Serial No.
A1	B-C0013-30045		SECTION-ASSY,INLET	ｲﾝﾚｯﾄｾｸｼｮﾝｱｯｾﾝ	1	[FIT] INC.1-40
901	B-2101B-31009	K1	KIT,RELIEF	ﾘﾘｰﾌｷｯﾄ	1	[FIT] INC.18,19,21
902	B-2101B-30124	K2	KIT,SEAT,SPRING	ｼｰﾄｷｯﾄ	1	[FIT] INC.14,15
903	B-2093B-92002	K3	KIT,HOUSING	ﾊｳｼﾞﾝｸﾞｷｯﾄ	1	[FIT] INC.18,19
1	NO PART NO.	#	HOUSING,INLET	ﾊｳｼﾞﾝｸﾞ	1	[FIT]
2	NO PART NO.	#	SPOOL	ｽﾌﾟｰﾙ	1	[FIT]
3	B-21731-30802		SPRING	ｽﾌﾟﾘﾝｸﾞ	1	[FIT]
4	NO PART NO.	#	SLEEVE	ｽﾘｰﾌﾞ	1	[FIT]
5	NO PART NO.	#	PISTON	ﾋﾟｽﾄﾝ	1	[FIT]
6	B-21731-30304		SPRING	ｽﾌﾟﾘﾝｸﾞ	1	[FIT]
7	B-21001-01452		RING,SNAP	ｽﾅｯﾌﾟﾘﾝｸﾞ	1	[FIT]
8	B-C0733-40010		CONNECTOR	ｺﾈｸﾀ	1	[FIT]
9	B-T1152-27502		PLUG	ﾌﾟﾗｸﾞ	1	[FIT]
10	B-95113-02400		O-RING	Oﾘﾝｸﾞ	1	[FIT]
11	NO PART NO.	#	SLEEVE	ｽﾘｰﾌﾞ	1	[FIT]
12	NO PART NO.	#	SHUTTLE	ｼｬﾄﾙ	1	[FIT]
13	B-21641-11002		SPRING	ｽﾌﾟﾘﾝｸﾞ	1	[FIT]
14	B-21641-10957	*	SEAT,SPRING	ｼｰﾄ	1	[FIT]
15	B-96321-05550	*	BALL,STEEL	ﾎﾞｰﾙ	1	[FIT]
16	B-21001-90434		PLUG	ﾌﾟﾗｸﾞ	1	[FIT]
17	B-21001-00036		O-RING	Oﾘﾝｸﾞ	1	[FIT]
18	B-21731-30703	*	HOUSING	ﾊｳｼﾞﾝｸﾞ	1	[FIT]
19	B-21731-30502	*	POPPET	ﾎﾟﾍﾟｯﾄ	1	[FIT]
20	B-21731-30306		SPRING	ｽﾌﾟﾘﾝｸﾞ	1	[FIT]
21	B-95111-01200	*	O-RING	Oﾘﾝｸﾞ	1	[FIT]
22	B-21731-30406		PLATE	ﾌﾟﾚｰﾄ	1	[FIT]
23	B-92703-06181		BOLT,SOCKET-HEAD	ﾎﾞﾙﾄ	2	[FIT]
24	B-91511-08180		SCREW	ｽｸﾘｭ	1	[FIT]
25	B-93364-08052		NUT	ﾅｯﾄ	1	[FIT]
26	B-21011-32495		POPPET	ﾎﾟﾍﾟｯﾄ	1	[FIT]
27	B-21011-36502		SPRING	ｽﾌﾟﾘﾝｸﾞ	1	[FIT]
28	B-21001-90435		PLUG	ﾌﾟﾗｸﾞ	1	[FIT]
29	B-95113-01800		O-RING	Oﾘﾝｸﾞ	1	[FIT]
30	B-97123-01111		PLUG	ﾌﾟﾗｸﾞ	1	[FIT]
31	B-97123-02111		PLUG	ﾌﾟﾗｸﾞ	1	[FIT]
32	B-21001-00106		O-RING	Oﾘﾝｸﾞ	1	[FIT]
33	B-95151-00900		O-RING	Oﾘﾝｸﾞ	4	[FIT]
34	NO PART NO.	#	PLATE,NAME	ﾌﾟﾚｰﾄ	1	[FIT]
35	NO PART NO.	#	SCREW	ｽｸﾘｭ	2	[FIT]
36	B-25010-13104		VALVE,SOLENOID	ﾊﾞﾙﾌﾞ	1	[FIT]
37	B-21001-90112		PLUG	ﾌﾟﾗｸﾞ	1	[FIT]
38	B-95113-00800		O-RING	Oﾘﾝｸﾞ	1	[FIT]
39	B-T1411-06001		VALVE,CHECK	ﾊﾞﾙﾌﾞ	1	[FIT]
40	B-T1171-09503		PLUG	ﾌﾟﾗｸﾞ	1	[FIT]

FIG.166 SPOOL SECTION (ATT)(TOR-CON):[3SV/FIT][4SV/FIT]

(F7Z173U0) スプールセクション

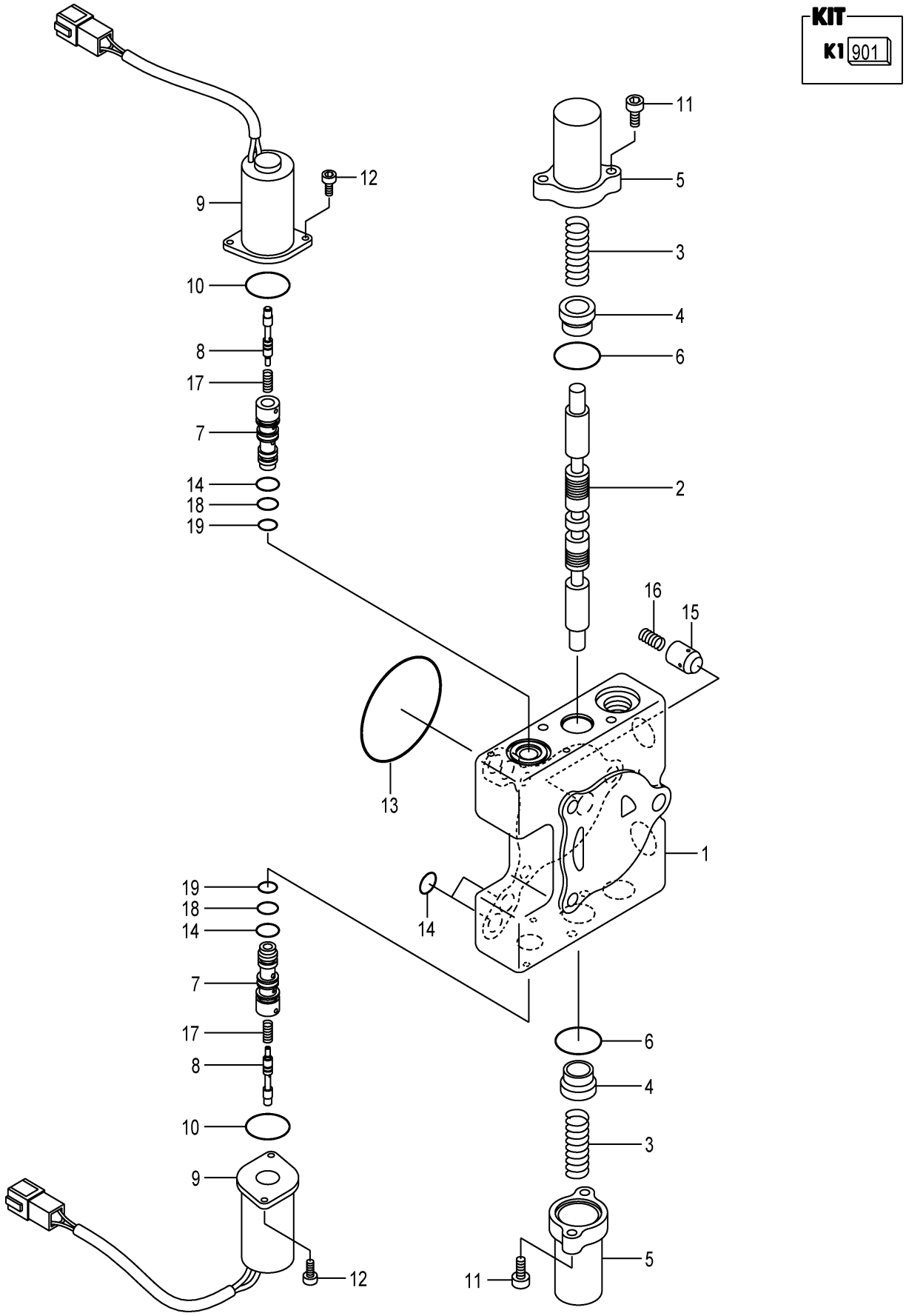

A:FHD15T3Z FHD18T3Z

Item No	Part No.	Mark	Description		Req'd	Remarks : Serial No.
A1	B-C0013-31638		SECTION-ASSY,SPOOL,ATT	ｽﾌﾟｰﾙｾｸｼｮﾝｱｯｾﾝ	1	[3SV/FIT] INC.1-19
-	B-C0013-31638		SECTION-ASSY,SPOOL,ATT	ｽﾌﾟｰﾙｾｸｼｮﾝｱｯｾﾝ	2	[4SV/FIT] INC.1-19
901	B-C001B-30076	K1	KIT,SLEEVE	ｽﾘｰﾌﾞｷｯﾄ	2	[3SV/FIT] INC.7,8,14,18,19
-	B-C001B-30076	K1	KIT,SLEEVE	ｽﾘｰﾌﾞｷｯﾄ	4	[4SV/FIT] INC.7,8,14,18,19
1	NO PART NO.	#	HOUSING,VALVE	ﾊｳｼﾞﾝｸﾞ	1	[3SV/FIT]
-	NO PART NO.	#	HOUSING,VALVE	ﾊｳｼﾞﾝｸﾞ	2	[4SV/FIT]
2	NO PART NO.	#	SPOOL	ｽﾌﾟｰﾙ	1	[3SV/FIT]
-	NO PART NO.	#	SPOOL	ｽﾌﾟｰﾙ	2	[4SV/FIT]
3	B-T1461-16006		SPRING	ｽﾌﾟﾘﾝｸﾞ	2	[3SV/FIT]
-	B-T1461-16006		SPRING	ｽﾌﾟﾘﾝｸﾞ	4	[4SV/FIT]
4	B-21011-30740		SEAT,SPRING	ｼｰﾄ	2	[3SV/FIT]
-	B-21011-30740		SEAT,SPRING	ｼｰﾄ	4	[4SV/FIT]
5	B-C0001-32029		CAP	ｷｬｯﾌﾟ	2	[3SV/FIT]
-	B-C0001-32029		CAP	ｷｬｯﾌﾟ	4	[4SV/FIT]
6	B-95151-02400		O-RING	Oﾘﾝｸﾞ	2	[3SV/FIT]
-	B-95151-02400		O-RING	Oﾘﾝｸﾞ	4	[4SV/FIT]
7	B-T1331-11001	*	SLEEVE	ｽﾘｰﾌﾞ	2	[3SV/FIT]
-	B-T1331-11001	*	SLEEVE	ｽﾘｰﾌﾞ	4	[4SV/FIT]
8	B-T1441-04001	*	SHUTTLE	ｼｬﾄﾙ	2	[3SV/FIT]
-	B-T1441-04001	*	SHUTTLE	ｼｬﾄﾙ	4	[4SV/FIT]
9	B-25513-10158		SOLENOID	ｿﾚﾉｲﾄﾞ	2	[3SV/FIT]
-	B-25513-10158		SOLENOID	ｿﾚﾉｲﾄﾞ	4	[4SV/FIT]
10	B-95111-02200		O-RING	Oﾘﾝｸﾞ	2	[3SV/FIT]
-	B-95111-02200		O-RING	Oﾘﾝｸﾞ	4	[4SV/FIT]
11	B-92703-06181		BOLT,SOCKET-HEAD	ﾎﾞﾙﾄ	4	[3SV/FIT]
-	B-92703-06181		BOLT,SOCKET-HEAD	ﾎﾞﾙﾄ	8	[4SV/FIT]
12	B-92703-05101		BOLT,SOCKET-HEAD	ﾎﾞﾙﾄ	4	[3SV/FIT]
-	B-92703-05101		BOLT,SOCKET-HEAD	ﾎﾞﾙﾄ	8	[4SV/FIT]
13	B-21001-00106		O-RING	Oﾘﾝｸﾞ	1	[3SV/FIT]
-	B-21001-00106		O-RING	Oﾘﾝｸﾞ	2	[4SV/FIT]
14	B-95151-00900	*	O-RING	Oﾘﾝｸﾞ	6	[3SV/FIT]
-	B-95151-00900	*	O-RING	Oﾘﾝｸﾞ	12	[4SV/FIT]
15	B-21011-32404		POPPET	ﾎﾟﾍﾟｯﾄ	1	[3SV/FIT]
-	B-21011-32404		POPPET	ﾎﾟﾍﾟｯﾄ	2	[4SV/FIT]
16	B-21011-30604		SPRING	ｽﾌﾟﾘﾝｸﾞ	1	[3SV/FIT]
-	B-21011-30604		SPRING	ｽﾌﾟﾘﾝｸﾞ	2	[4SV/FIT]
17	B-T1461-03002		SPRING	ｽﾌﾟﾘﾝｸﾞ	2	[3SV/FIT]
-	B-T1461-03002		SPRING	ｽﾌﾟﾘﾝｸﾞ	4	[4SV/FIT]
18	B-95151-00800	*	O-RING	Oﾘﾝｸﾞ	2	[3SV/FIT]
-	B-95151-00800	*	O-RING	Oﾘﾝｸﾞ	4	[4SV/FIT]
19	B-95151-00700	*	O-RING	Oﾘﾝｸﾞ	2	[3SV/FIT]
-	B-95151-00700	*	O-RING	Oﾘﾝｸﾞ	4	[4SV/FIT]

FIG.167 HYDRAULIC LINE (MAIN)(1/4)

(F7Z17630) ﾊｲﾄﾞﾛﾘｯｸﾗｲﾝ(ﾒｲﾝ)(1/4)

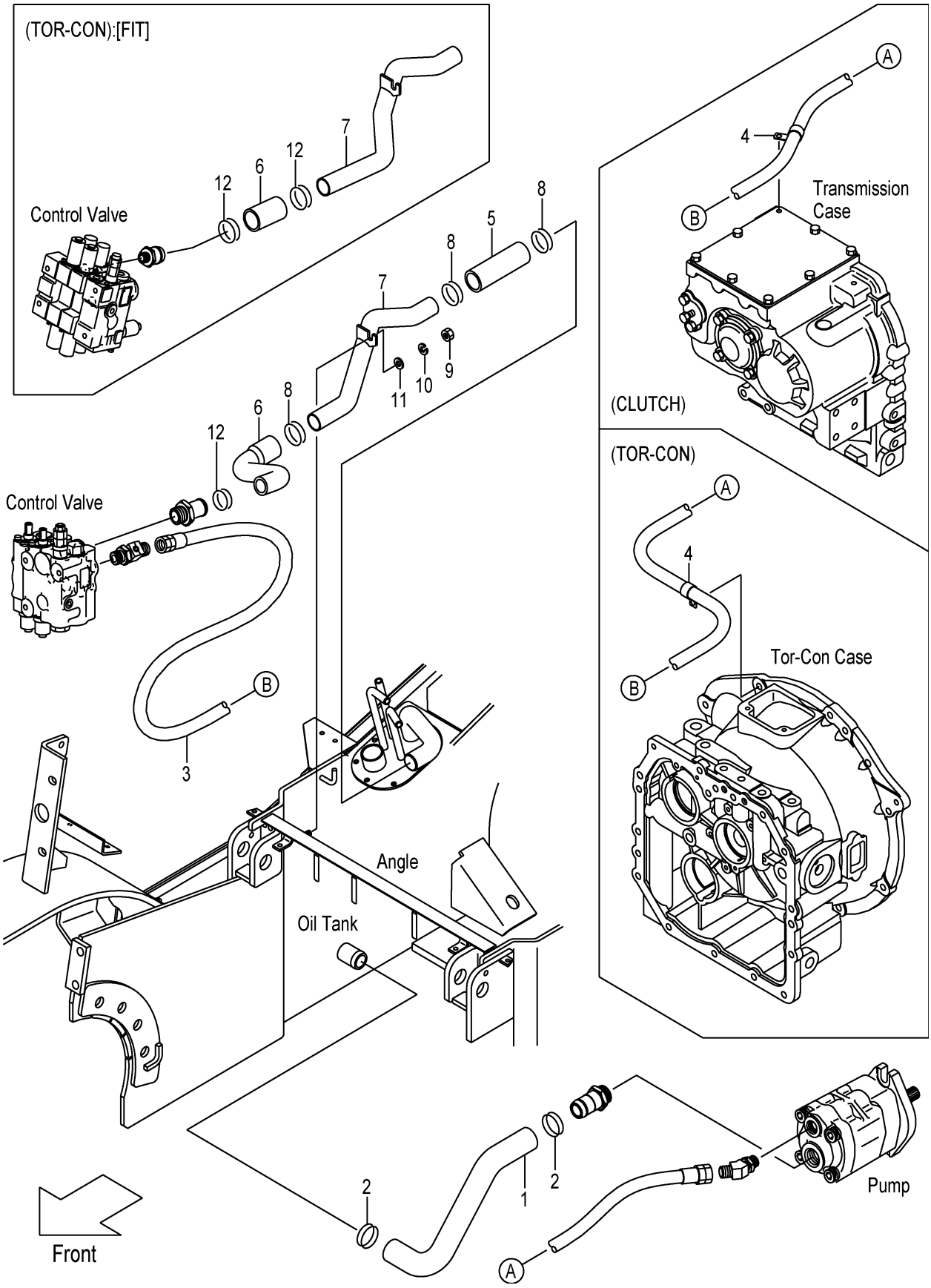

A:FHD15C3Z FHD18C3Z
B:FHD15T3Z FHD18T3Z

Item No	Part No.	Mark	Description		Req'd	Remarks : Serial No.
1	20L77-62001		HOSE,SUCTION	ﾎｰｽ	1	
2	04911-00046		CLIP	ｸﾘｯﾌﾟ	2	
3	20A77-62201		HOSE	ﾎｰｽ	1	
4	214A2-42711		CLIP	ｸﾘｯﾌﾟ	1	
5	20A77-62111		HOSE,RETURN	ﾎｰｽ	1	
6	20A77-62122		HOSE,RETURN	ﾎｰｽ	1	
-	04700-12008		HOSE	ﾎｰｽ	1	B [FIT]
-	04710-12020		HOSE	ﾎｰｽ	1	B [3SV/FIT][4SV/FIT]
7	20A77-62132		PIPE,RETURN	ﾊﾟｲﾌﾟ	1	
-	50A72-B0421		PIPE,RETURN	ﾊﾟｲﾌﾟ	1	B [FIT]
-	50A72-B0431		PIPE,RETURN	ﾊﾟｲﾌﾟ	1	B [3SV/FIT][4SV/FIT]
8	04911-00044		CLIP	ｸﾘｯﾌﾟ	3	
-	04911-00044		CLIP	ｸﾘｯﾌﾟ	2	B [FIT]
9	01400-00010		NUT	ﾅｯﾄ	1	
10	02010-00010		WASHER	ﾜｯｼｬ	1	
11	02000-00010		WASHER	ﾜｯｼｬ	1	
12	04911-00036		CLIP	ｸﾘｯﾌﾟ	1	
-	04911-00050		CLIP	ｸﾘｯﾌﾟ	2	B [FIT]

FIG.168 HYDRAULIC LINE (MAIN)(2/4)

(F7Z17650) ﾊｲﾄﾞﾛﾘｯｸﾗｲﾝ(ﾒｲﾝ)(2/4)

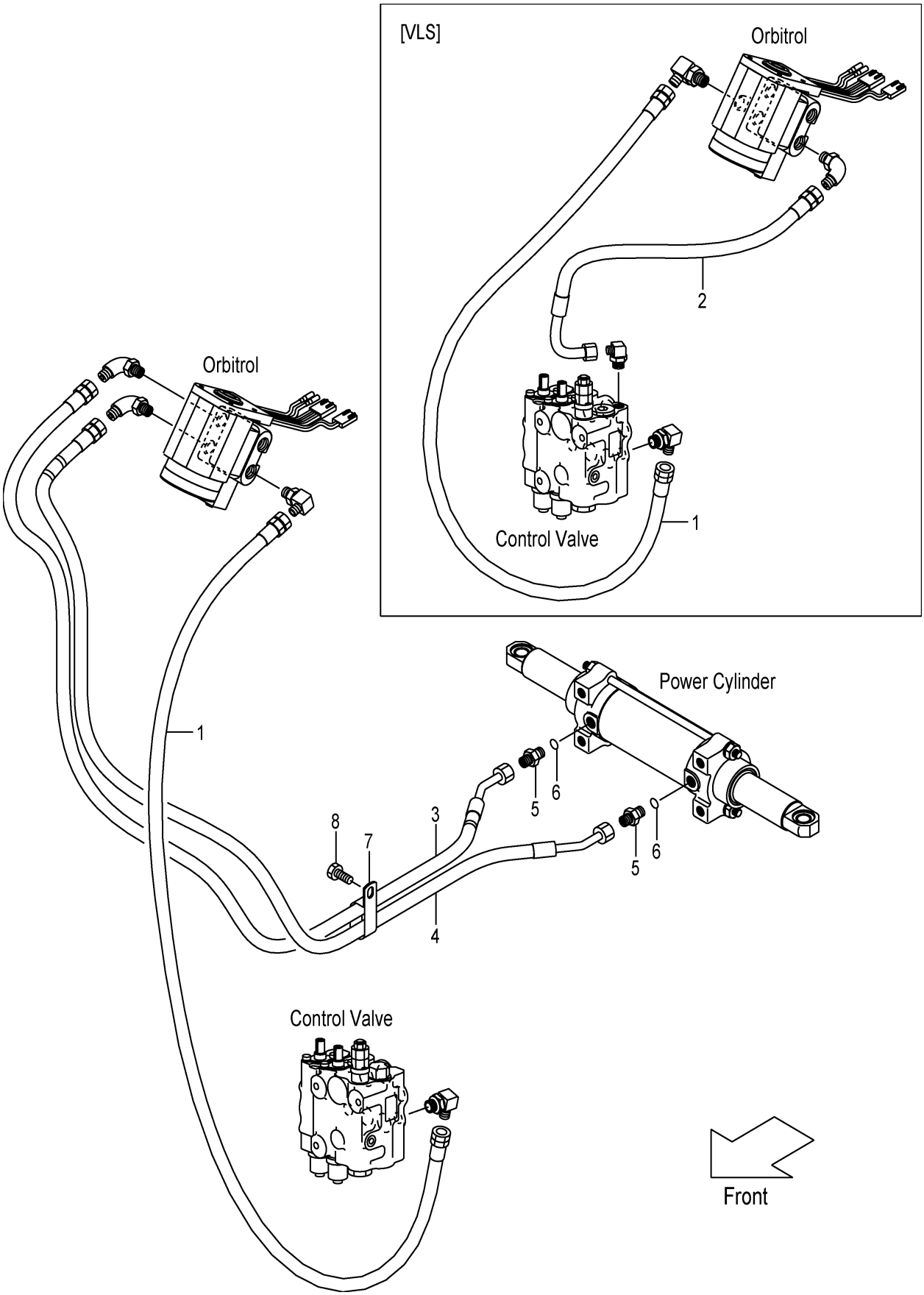

FIG.168

(F7Z17650)

A:FHD15C3Z FHD15T3Z FHD18C3Z FHD18T3Z

Item No	Part No.	Mark	Description		Req'd	Remarks : Serial No.
1	04691-02075		HOSE	ﾎｰｽ	1	
2	50A74-62011		HOSE	ﾎｰｽ	1	[VLS]
3	20A77-62381		HOSE,PS,FRONT	ﾎｰｽ	1	
4	20A77-62391		HOSE,PS,FRONT	ﾎｰｽ	1	
A1	04134-20303		NIPPLE-ASSY	ﾆｯﾌﾟﾙｱｯｾﾝ	2	INC.5,6
5	NO PART NO.	#	NIPPLE	ﾆｯﾌﾟﾙ	2	
6	03320-00140		O-RING	Oﾘﾝｸﾞ	2	
7	26602-42221		CLIP	ｸﾘｯﾌﾟ	1	
8	01185-08016		BOLT	ﾎﾞﾙﾄ	1	

FIG.169 HYDRAULIC LINE (MAIN)(3/4)

(F7Z17660) ﾊｲﾄﾞﾛﾘｯｸﾗｲﾝ(ﾒｲﾝ)(3/4)

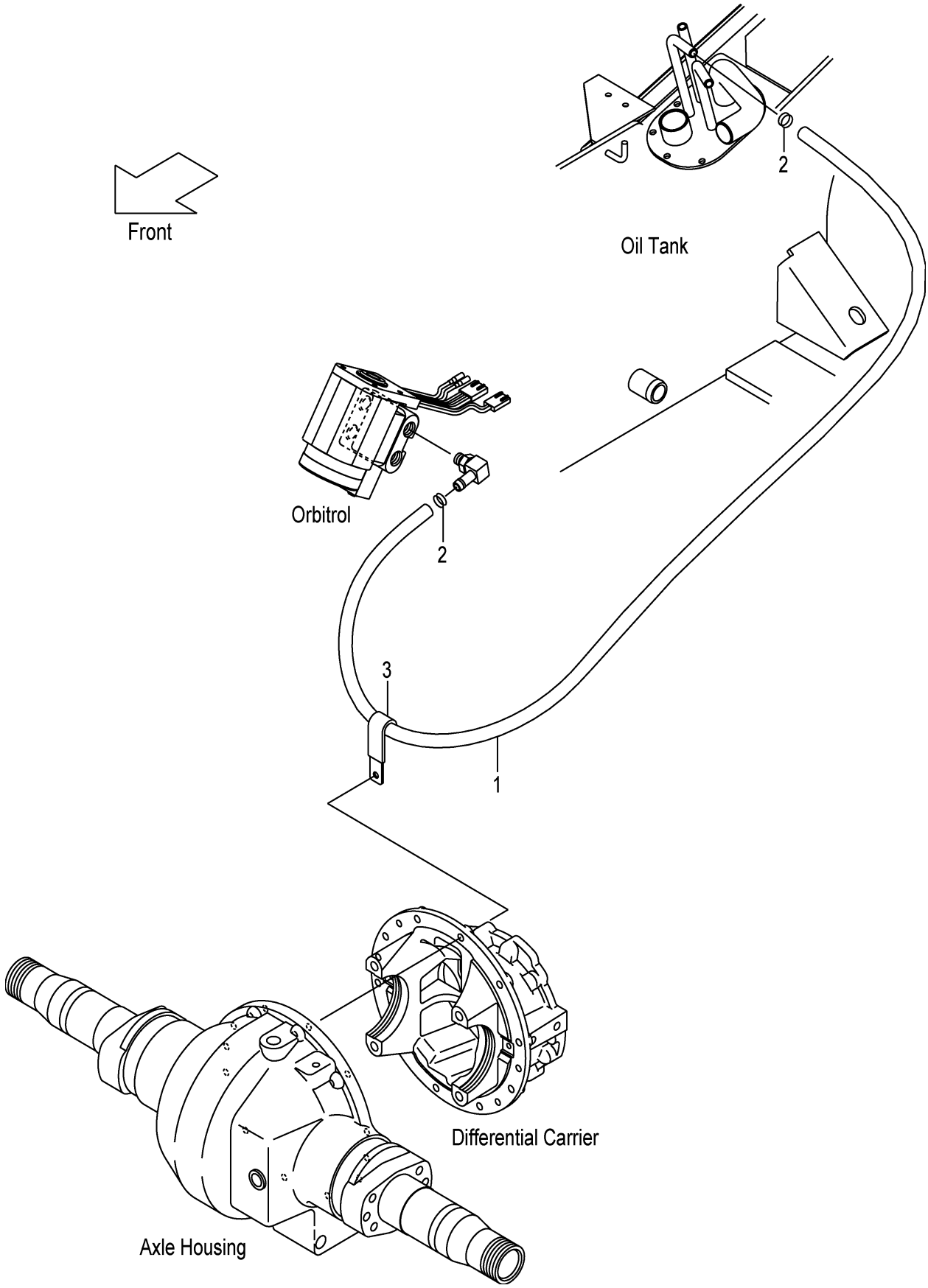

FIG.169

(F7Z17660)

A:FHD15C3Z FHD15T3Z FHD18C3Z FHD18T3Z

Item No	Part No.	Mark	Description	Req'd	Remarks : Serial No.
1	04710-04210		HOSE ﾎｰｽ	1	
2	04911-00020		CLIP ｸﾘｯﾌﾟ	2	
3	22N55-42191		CLIP ｸﾘｯﾌﾟ	1	

FIG.170 HYDRAULIC LINE (MAIN)(4/4)

(F7Z17690) ﾊｲﾄﾞﾛﾘｯｸﾗｲﾝ(ﾒｲﾝ)(4/4)

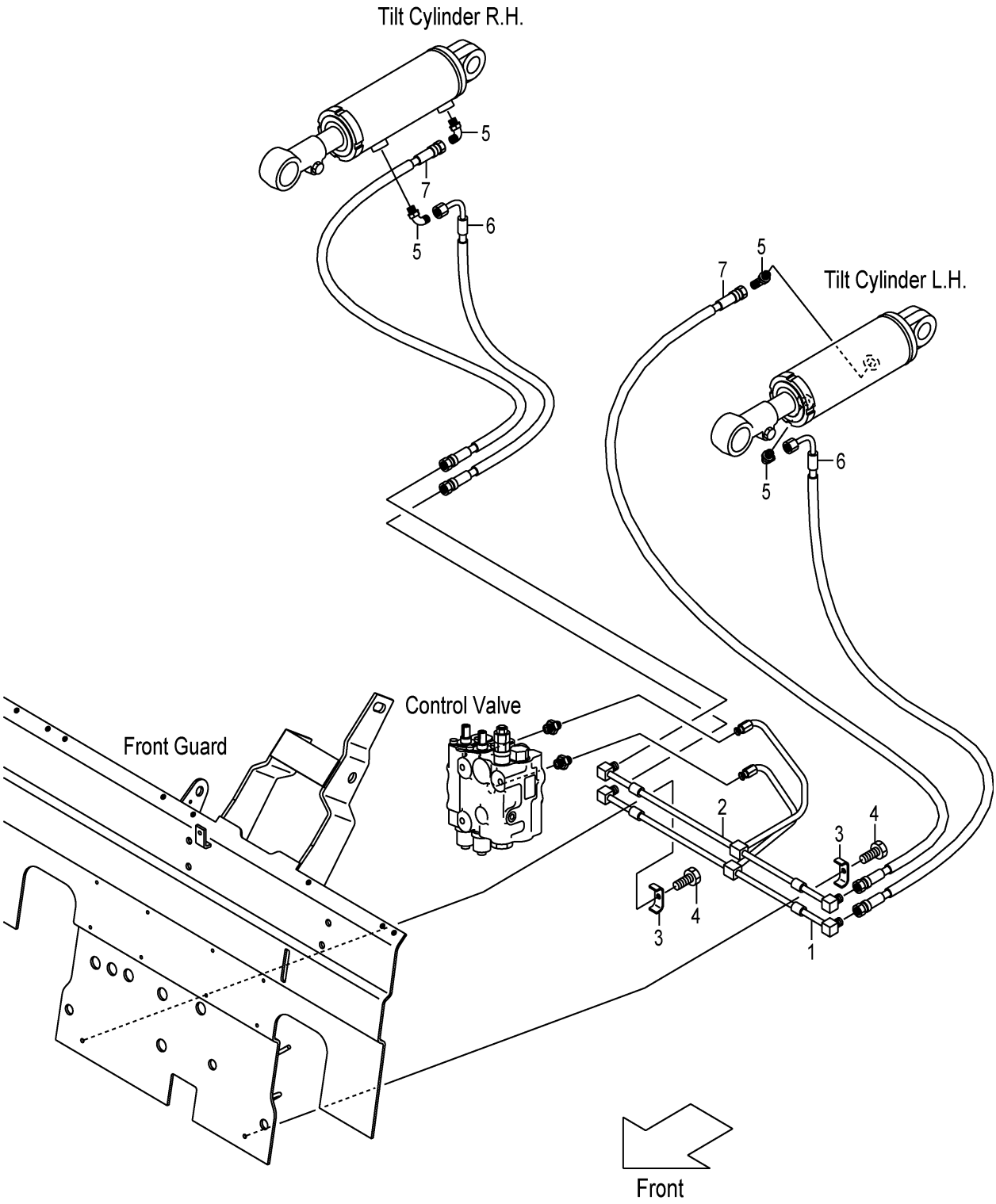

A:FHD15C3Z FHD18C3Z
B:FHD15T3Z FHD18T3Z

Item No	Part No.	Mark	Description		Req'd	Remarks : Serial No.
1	20A77-62401		PIPE,TILT-CYL,FRONT	ﾊﾟｲﾌﾟ	1	
-	50A72-B2401		PIPE,TILT-CYL,FRONT	ﾊﾟｲﾌﾟ	1	B
						[FIT]
2	20A77-62451		PIPE,TILT-CYL,REAR	ﾊﾟｲﾌﾟ	1	
-	50A72-B2451		PIPE,TILT-CYL,REAR	ﾊﾟｲﾌﾟ	1	B
						[FIT]
3	281E7-62041		CLIP,HOSE	ｸﾘｯﾌﾟ	2	
4	01183-08025		BOLT	ﾎﾞﾙﾄ	2	
5	22N57-62221		ELBOW	ｴﾙﾎﾞ	4	
6	20A77-62481		HOSE,TILT-CYL	ﾎｰｽ	2	
7	22N57-63151		HOSE,TILT-CYL	ﾎｰｽ	2	

FIG.171 HYDRAULIC LINE (TOR-CON)

(F7Z176A0) ﾊｲﾄﾞﾛﾘｯｸﾗｲﾝ(ﾄﾙｺﾝ)

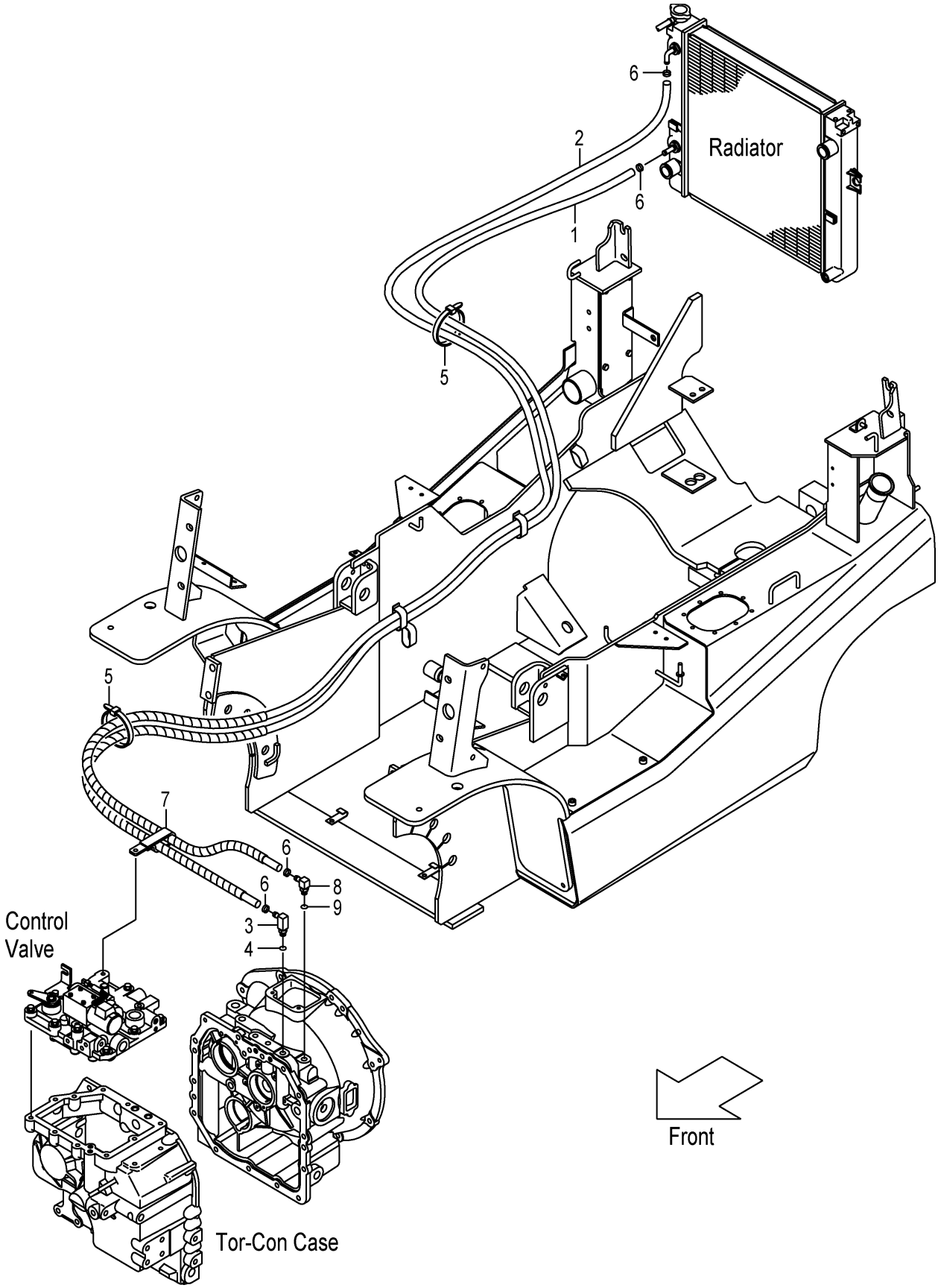

A:FHD15T3Z FHD18T3Z

Item No	Part No.	Mark	Description		Req'd	Remarks : Serial No.
1	216H7-82111		HOSE,OIL-COOLER	ﾎｰｽ	1	
2	22S57-82001		HOSE,OIL-COOLER	ﾎｰｽ	1	
A1	22N57-80201		FITTING-ASSY,HOSE	ﾎｰｽﾌｨｯﾃｨﾝｸﾞｱｯｾﾝ	1	INC.3,4
3	NO PART NO.	#	FITTING,HOSE	ﾌｨｯﾃｨﾝｸﾞ	1	
4	03320-00140		O-RING	Oﾘﾝｸﾞ	1	
5	27042-42322		BAND	ﾊﾞﾝﾄﾞ	2	
6	04911-00023		CLIP	ｸﾘｯﾌﾟ	4	
7	209P7-62531		CLIP,HOSE	ｸﾘｯﾌﾟ	1	
A2	22N57-80301		FITTING-ASSY,HOSE	ﾎｰｽﾌｨｯﾃｨﾝｸﾞｱｯｾﾝ	1	INC.8,9
8	NO PART NO.	#	FITTING,HOSE	ﾌｨｯﾃｨﾝｸﾞ	1	
9	03320-00140		O-RING	Oﾘﾝｸﾞ	1	

FIG.172 TILT CYLINDER

(F7Z18510) ﾃｨﾙﾄｼﾘﾝﾀﾞ

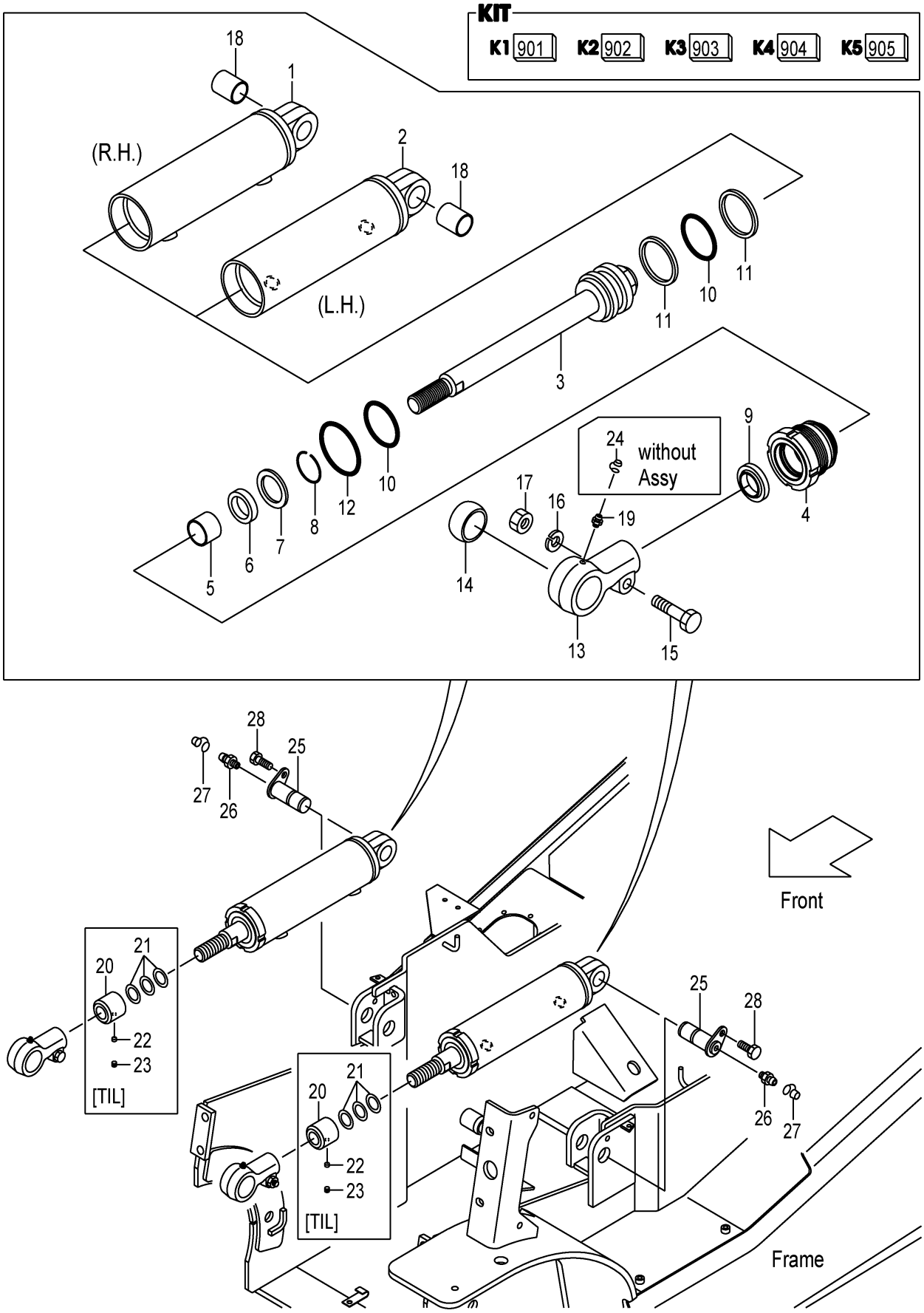

A:FHD15C3Z FHD15T3Z FHD18C3Z FHD18T3Z

Item No	Part No.	Mark	Description		Req'd	Remarks : Serial No.
A1	20A78-50101		CYL-ASSY,TILT,RH	ﾃｨﾙﾄｼﾘﾝﾀﾞｱｯｾﾝ	1	INC.1,3-19
A2	20A78-50111		CYL-ASSY,TILT,LH	ﾃｨﾙﾄｼﾘﾝﾀﾞｱｯｾﾝ	1	INC.2-19
901	216G8-52501	K1	KIT,REPAIR	ﾘﾍﾟｱｷｯﾄ	2	INC.6,9-12
902	NO PART NO.	K2	KIT,CYL-BODY,RH	ｼﾘﾝﾀﾞﾎﾞﾃﾞｨｷｯﾄ	1	INC.1,18
903	NO PART NO.	K3	KIT,CYL-BODY,LH	ｼﾘﾝﾀﾞﾎﾞﾃﾞｨｷｯﾄ	1	INC.2,18
904	NO PART NO.	K4	KIT,ROD-HEAD	ﾛｯﾄﾞﾍｯﾄﾞｷｯﾄ	2	INC.13,14
905	B-3065B-00139	K5	KIT,CYL-HEAD	ｼﾘﾝﾀﾞﾍｯﾄﾞｷｯﾄ	2	INC.4,5
1	NO PART NO.	#*	BODY,CYL,RH	ﾎﾞﾃﾞｨ	1	
2	NO PART NO.	#*	BODY,CYL,LH	ﾎﾞﾃﾞｨ	1	
3	NO PART NO.		ROD,PISTON	ﾛｯﾄﾞ	2	
4	NO PART NO.	#*	HEAD,CYL	ﾍｯﾄﾞ	2	
5	B-30131-03003	*	BUSHING	ﾌﾞｯｼﾝｸﾞ	2	
6	B-30961-03012	*	U-RING	Uﾘﾝｸﾞ	2	
7	B-30151-03006		SPACER	ｽﾍﾟｰｻ	2	
8	B-30141-35012		RING,SNAP	ｽﾅｯﾌﾟﾘﾝｸﾞ	2	
9	B-30191-30025	*	RING,WIPER	ﾘﾝｸﾞ	2	
10	B-95112-05500	*	O-RING	Oﾘﾝｸﾞ	4	
11	B-95713-05500	*	RING,BACK-UP	ﾘﾝｸﾞ	4	
12	B-95121-06500	*	O-RING	Oﾘﾝｸﾞ	2	
13	NO PART NO.	#*	HEAD,ROD	ﾍｯﾄﾞ	2	
14	B-30431-35009	*	BUSHING,PIN	ﾌﾞｯｼﾝｸﾞ	2	
15	B-B6341-01401		BOLT	ﾎﾞﾙﾄ	2	
16	B-30311-01403		WASHER	ﾜｯｼｬ	2	
17	B-B6351-01401		NUT	ﾅｯﾄ	2	
18	B-30421-30005	*	BUSHING,PIN	ﾌﾞｯｼﾝｸﾞ	2	
19	B-96111-10613		NIPPLE,GREASE	ﾆｯﾌﾟﾙ	2	
20	281E8-52211		SPACER,L-108	ｽﾍﾟｰｻ	2	[TIL013](3-3 DEG.)
-	281E8-52201		SPACER,L-88	ｽﾍﾟｰｻ	2	[TIL014](3-6 DEG.)
-	281E8-52201		SPACER,L-88	ｽﾍﾟｰｻ	2	[TIL016](6-6 DEG.)
-	20A78-52001		SPACER,L-58	ｽﾍﾟｰｻ	2	[TIL017](6-10 DEG.)
21	23658-52101		SHIM,T-0.5	ｼﾑ	6	[TIL013][TIL017]
						(3-3,6-10 DEG.)
-	23658-52101		SHIM,T-0.5	ｼﾑ	8	[TIL014][TIL016]
						(3-6,6-6 DEG.)
22	01066-10012		SCREW,SET	ｽｸﾘｭ	2	[TIL013][TIL017]
						(3-3,6-10 DEG.)
-	01066-10012		SCREW,SET	ｽｸﾘｭ	2	[TIL014][TIL016]
						(3-6,6-6 DEG.)
23	23658-52401		PLUG,NYLON	ﾌﾟﾗｸﾞ	2	[TIL013][TIL017]
						(3-3,6-10 DEG.)
-	23658-52401		PLUG,NYLON	ﾌﾟﾗｸﾞ	2	[TIL014][TIL016]
						(3-6,6-6 DEG.)
24	22199-12401		CAP,NIPPLE	ｷｬｯﾌﾟ	2	
25	216G8-52201		PIN	ﾋﾟﾝ	2	
26	04901-00100		FITTING	ﾌｨｯﾃｨﾝｸﾞ	2	
27	22199-12401		CAP,NIPPLE	ｷｬｯﾌﾟ	2	
28	216G8-52301		BOLT & WASHER	ﾎﾞﾙﾄ&ﾜｯｼｬ	2	

FIG.173 TILT BOOT [TLB][FC]

(F7Z18520) ﾃｨﾙﾄﾌﾞｰﾂ

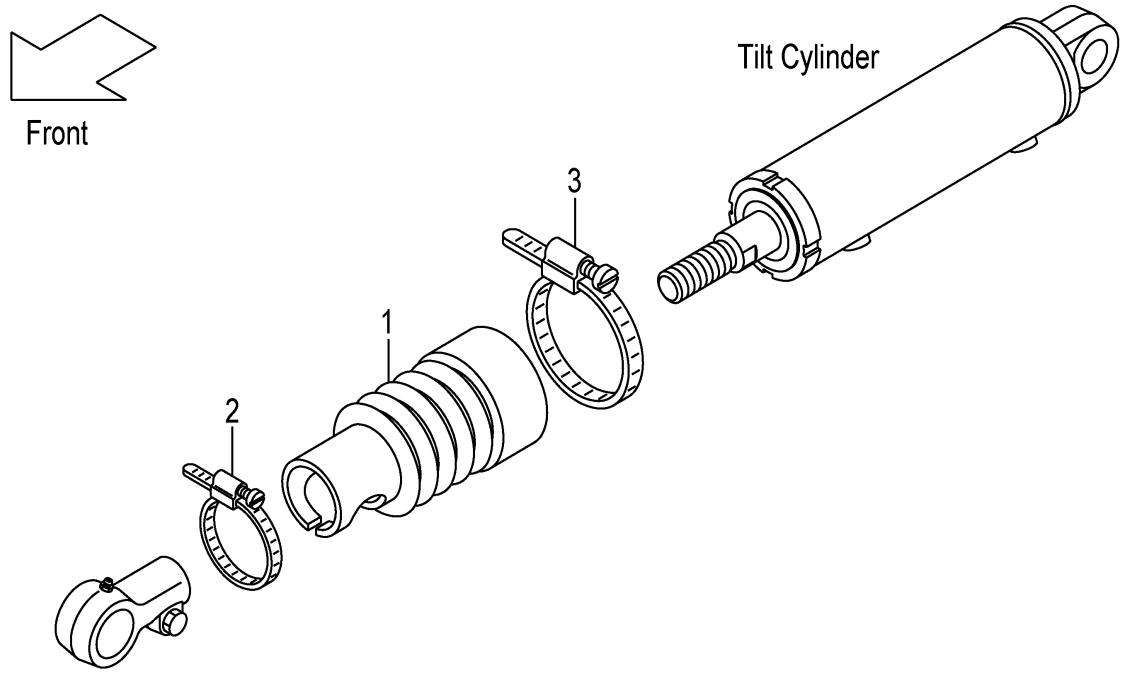

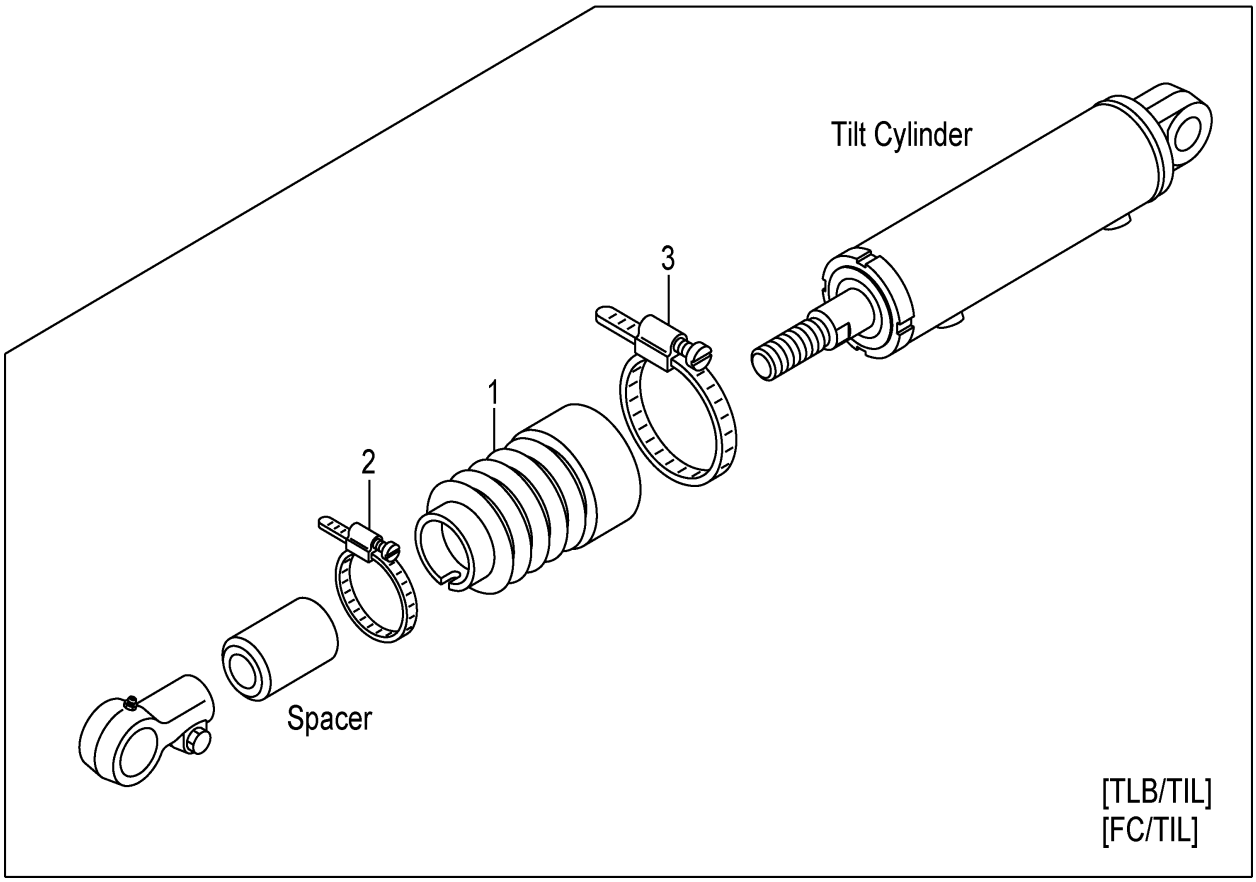

A:FHD15C3Z FHD15T3Z FHD18C3Z FHD18T3Z

Item No	Part No.	Mark	Description		Req'd	Remarks : Serial No.
A1	216G8-51001		BOOT-ASSY,TILT-CYL	ﾃｨﾙﾄｼﾘﾝﾀﾞﾌﾞｰﾂｱｯｾﾝ	2	[TLB][FC](6-12 DEG.) INC.1-3
-	216G8-51011		BOOT-ASSY,TILT-CYL	ﾃｨﾙﾄｼﾘﾝﾀﾞﾌﾞｰﾂｱｯｾﾝ	2	[TLB/TIL013&014] (3-3,3-6 DEG.) INC.1-3
-	216G8-51011		BOOT-ASSY,TILT-CYL	ﾃｨﾙﾄｼﾘﾝﾀﾞﾌﾞｰﾂｱｯｾﾝ	2	[TLB/TIL016&017] (6-6,6-10 DEG.) INC.1-3
-	216G8-51011		BOOT-ASSY,TILT-CYL	ﾃｨﾙﾄｼﾘﾝﾀﾞﾌﾞｰﾂｱｯｾﾝ	2	[FC/TIL013&014](3-3,3-6 DEG.) INC.1-3
-	216G8-51011		BOOT-ASSY,TILT-CYL	ﾃｨﾙﾄｼﾘﾝﾀﾞﾌﾞｰﾂｱｯｾﾝ	2	[FC/TIL016&017] (6-6,6-10 DEG.) INC.1-3
1	216G8-52251		BOOT,TILT-CYL	ﾌﾞｰﾂ	2	[TLB][FC](6-12 DEG.)
-	216G8-52261		BOOT,TILT-CYL	ﾌﾞｰﾂ	2	[TLB/TIL013&014] [FC/TIL013&014](3-3,3-6 DEG.)
-	216G8-52261		BOOT,TILT-CYL	ﾌﾞｰﾂ	2	[TLB/TIL016&017] [FC/TIL016&017] (6-6,6-10 DEG.)
2	216G8-53001		BAND,50	ﾊﾞﾝﾄﾞ	2	[TLB][FC](6-12 DEG.)
-	216G8-53011		BAND,55	ﾊﾞﾝﾄﾞ	(2)	[TLB][FC](6-12 DEG.)
-	216G8-53021		BAND,65	ﾊﾞﾝﾄﾞ	2	[TLB/TIL013&014] [FC/TIL013&014](3-3,3-6 DEG.)
-	216G8-53031		BAND,70	ﾊﾞﾝﾄﾞ	(2)	[TLB/TIL013&014] [FC/TIL013&014](3-3,3-6 DEG.)
-	216G8-53021		BAND,65	ﾊﾞﾝﾄﾞ	2	[TLB/TIL016&017] [FC/TIL016&017] (6-6,6-10 DEG.)
-	216G8-53031		BAND,70	ﾊﾞﾝﾄﾞ	(2)	[TLB/TIL016&017] [FC/TIL016&017] (6-6,6-10 DEG.)
3	216G8-53041		BAND,85	ﾊﾞﾝﾄﾞ	2	[TLB][FC]
-	216G8-53051		BAND,90	ﾊﾞﾝﾄﾞ	(2)	[TLB][FC]

FIG.174 DECAL (1/2)

(F7Z19110) ﾃﾞｶﾙ(1/2)

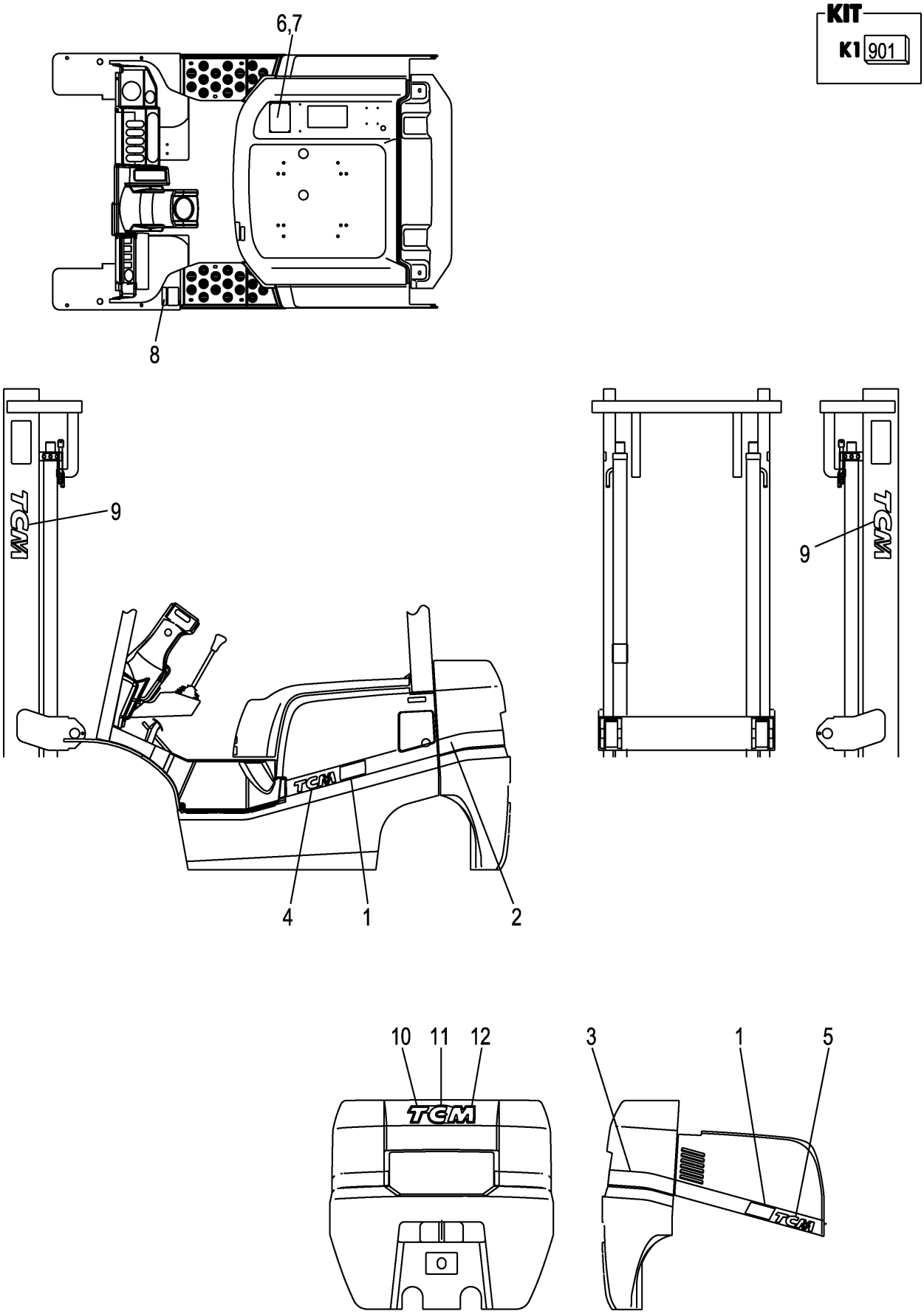

A:FHD15C3Z FHD15T3Z
B:FHD18C3Z FHD18T3Z

Item No	Part No.	Mark	Description		Req'd	Remarks : Serial No.
901	C-11452-0H7-D	K1	KIT,DECAL,JPN	ﾃﾞｶﾙｷｯﾄ	1	INC.8,9,FIG.175:3-16
-	C-11452-0H7-E	K1	KIT,DECAL,ENGLISH	ﾃﾞｶﾙｷｯﾄ	1	[EXB/ENGLISH] INC.8,9,FIG.176:3-11,16-24
-	C-11452-0H7-S	K1	KIT,DECAL,SPANISH	ﾃﾞｶﾙｷｯﾄ	1	[EXB/SPANISH] INC.8,9,FIG.176:3-11,15-24
-	C-11452-0H7-BF	K1	KIT,DECAL,FRENCH	ﾃﾞｶﾙｷｯﾄ	1	[EXB/FRENCH] INC.8,9,FIG.176:3-11,15-24
-	C-11452-0J7-P	K1	KIT,DECAL,PORTUGUESE	ﾃﾞｶﾙｷｯﾄ	1	[EXB/PORTUGUESE] INC.8,9,FIG.176:3-11,15-24
-	C-11452-0J7-C	K1	KIT,DECAL,CHINESE	ﾃﾞｶﾙｷｯﾄ	1	[EXB/CHINESE] INC.8,9,FIG.176:3-12, 15-21,23,24
-	C-11452-0J7-R	K1	KIT,DECAL,RUSSIAN	ﾃﾞｶﾙｷｯﾄ	1	[EXB/RUSSIAN] INC.8,9,FIG.176:3-11,13-24
1	20A79-12281		DECAL,MODEL-MARK,15	ﾃﾞｶﾙ	2	A
-	20A99-12281		DECAL,MODEL-MARK,18	ﾃﾞｶﾙ	2	B
2	20A79-12151		LINE,WEIGHT,LH	ﾗｲﾝ	1	A
-	20A99-12151		LINE,WEIGHT,LH	ﾗｲﾝ	1	B
3	20A79-12161		LINE,WEIGHT,RH	ﾗｲﾝ	1	A
-	20A99-12161		LINE,WEIGHT,RH	ﾗｲﾝ	1	B
4	20A79-12101		LINE,COVER,LH	ﾗｲﾝ	1	
5	20A79-12111		LINE,COVER,RH	ﾗｲﾝ	1	
6	27399-12051		CHART,CAPACITY	ﾁｬｰﾄ	1	A (VM200-500)
-	27399-12091		CHART,CAPACITY	ﾁｬｰﾄ	1	A (VM550-600)
-	21279-12001		CHART,CAPACITY	ﾁｬｰﾄ	1	B (VM200-500)
-	21279-12011		CHART,CAPACITY	ﾁｬｰﾄ	1	B (VM550-600)
-	514A3-82331		CHART,CAPACITY	ﾁｬｰﾄ	1	[EXB/SPANISH]
-	514A3-82341		CHART,CAPACITY	ﾁｬｰﾄ	1	[EXB/FRENCH]
-	51232-82141		CHART,CAPACITY	ﾁｬｰﾄ	1	A [EXB/CHINESE](VM200-500)
-	51232-82151		CHART,CAPACITY	ﾁｬｰﾄ	1	A [EXB/CHINESE](VM550-600)
-	51272-82141		CHART,CAPACITY	ﾁｬｰﾄ	1	B [EXB/CHINESE](VM200-500)
-	51272-82151		CHART,CAPACITY	ﾁｬｰﾄ	1	B [EXB/CHINESE](VM550-600)
-	211S9-12011		CHART,CAPACITY	ﾁｬｰﾄ	1	A [EXB/RUSSIAN](VM200-500)
-	211S9-12021		CHART,CAPACITY	ﾁｬｰﾄ	1	A [EXB/RUSSIAN](VM550-600)
-	217Y9-12001		CHART,CAPACITY	ﾁｬｰﾄ	1	B [EXB/RUSSIAN](VM200-500)
-	217Y9-12011		CHART,CAPACITY	ﾁｬｰﾄ	1	B [EXB/RUSSIAN](VM550-600)
-	514A3-82391		CHART,CAPACITY	ﾁｬｰﾄ	1	[EXB/PORTUGUESE]
7	02432-01008		RIVET	ﾘﾍﾞｯﾄ	4	

FIG.174 DECAL (1/2)

(F7Z19110) ﾃﾞｶﾙ(1/2)

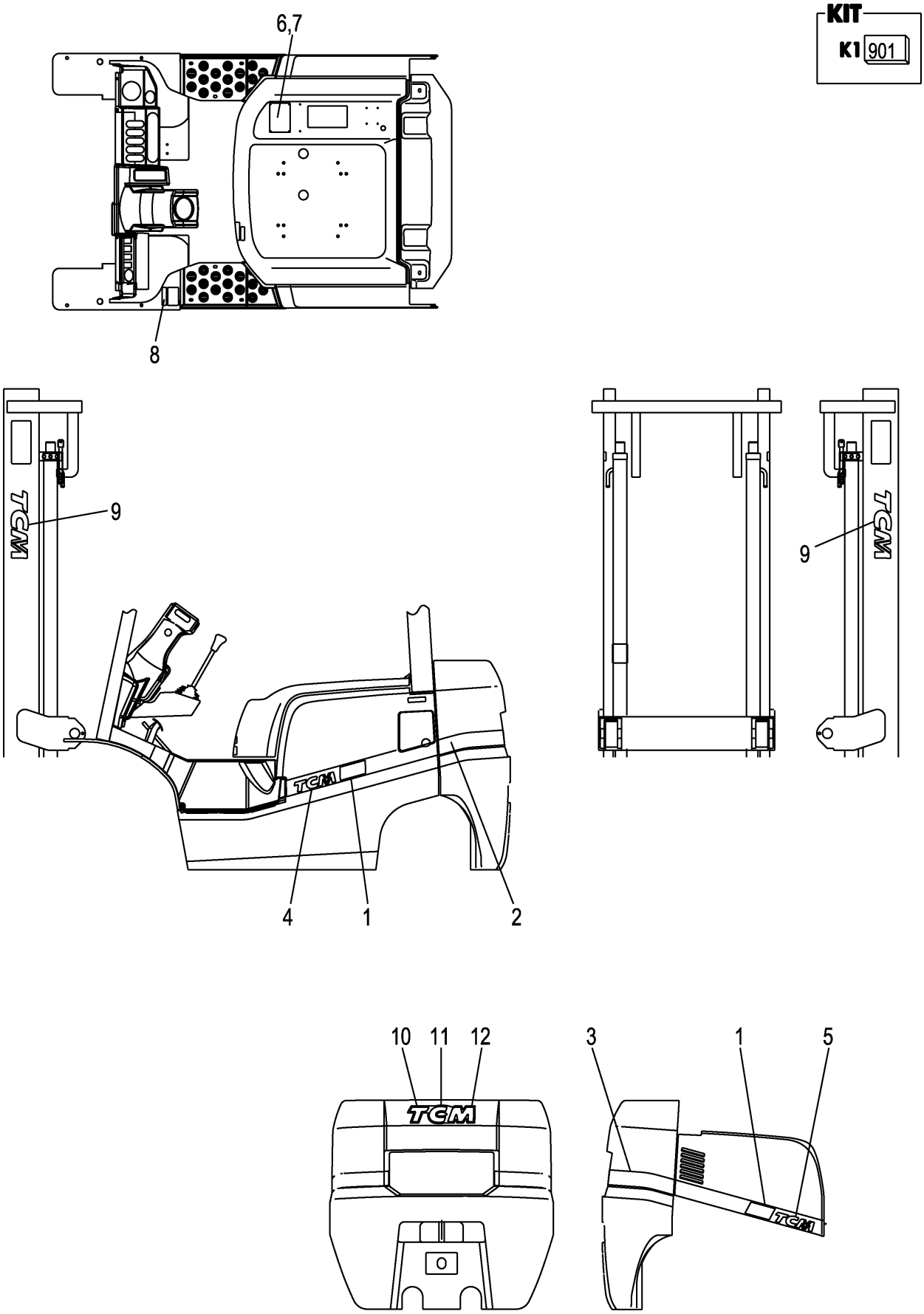

A:FHD15C3Z FHD15T3Z
B:FHD18C3Z FHD18T3Z

Item No	Part No.	Mark	Description	Req'd	Remarks : Serial No.
8	216G9-12142	*	DECAL,AIR-PRESSURE デカル	1	
-	217U9-12002	*	DECAL,AIR-PRESSURE デカル	1	[EXB/RUSSIAN]
9	273A9-12242	*	DECAL,TCM デカル	2	
-	214A9-12142		DECAL,TCM デカル	2	[DLB]
10	22N59-12041		DECAL,B/WEIGHT,T デカル	1	
-	52N59-72141		DECAL,B/WEIGHT,T デカル	1	[DLB]
-	52N59-72041		DECAL,B/WEIGHT,T デカル	1	[DLW]
11	22N59-12051		DECAL,B/WEIGHT,C デカル	1	
-	52N59-72151		DECAL,B/WEIGHT,C デカル	1	[DLB]
-	52N59-72051		DECAL,B/WEIGHT,C デカル	1	[DLW]
12	22N59-12061		DECAL,B/WEIGHT,M デカル	1	
-	52N59-72161		DECAL,B/WEIGHT,M デカル	1	[DLB]
-	52N59-72061		DECAL,B/WEIGHT,M デカル	1	[DLW]

FIG.175 DECAL (2/2)

(F7Z19120) ﾃﾞｶﾙ(2/2)

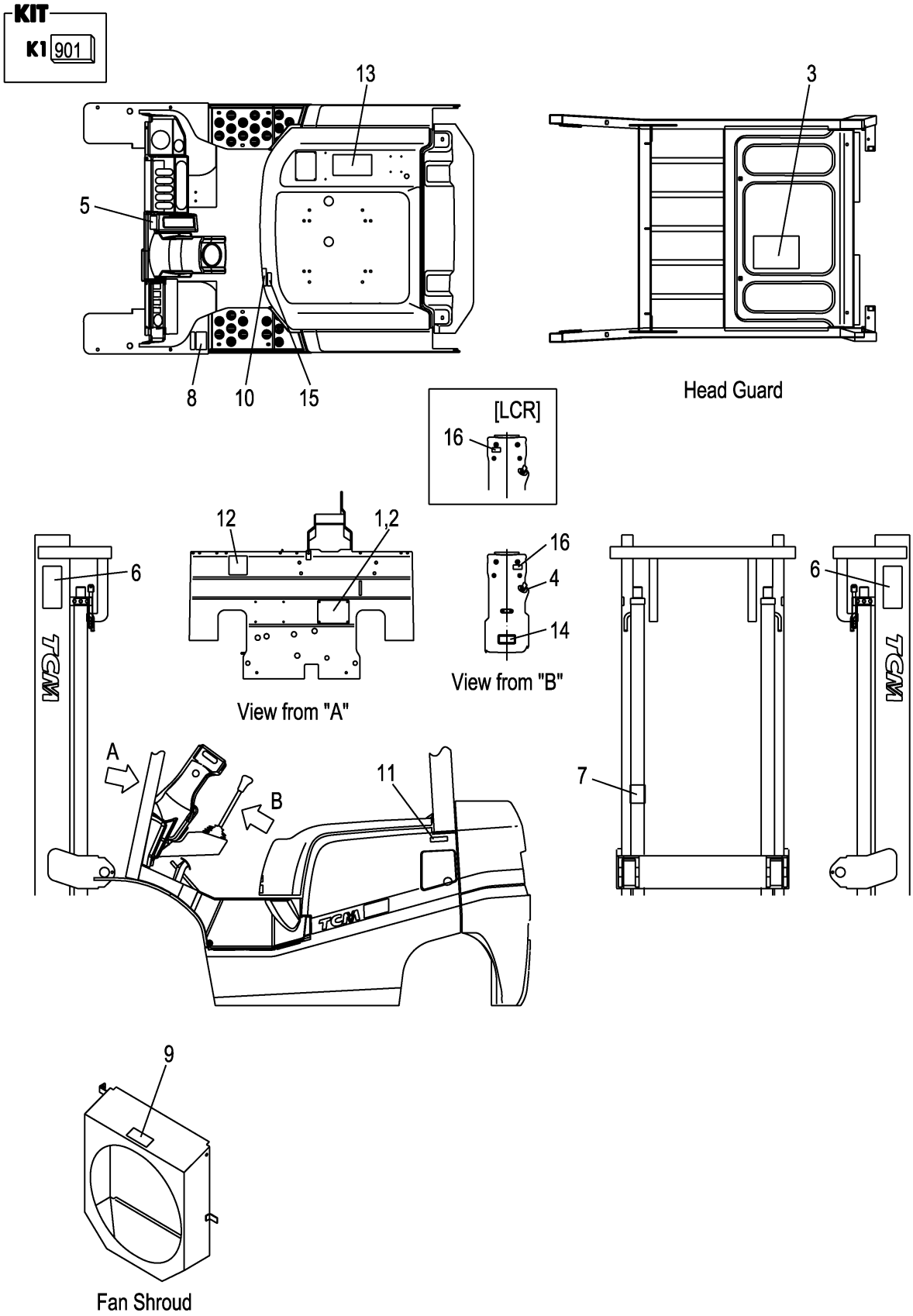

A:FHD15C3Z FHD15T3Z FHD18C3Z FHD18T3Z

Item No	Part No.	Mark	Description		Req'd	Remarks : Serial No.
901	C-11452-0H7-D	K1	KIT,DECAL,JPN	ﾃﾞｶﾙｷｯﾄ	1	INC.3-16,FIG.174:8,9
1	NO PART NO.	#	PLATE,NAME	ﾌﾟﾚｰﾄ	1	
2	216G9-12131		RIVET	ﾘﾍﾞｯﾄ	4	
3	22N59-12261	*	DECAL,LUBRICATION	ﾃﾞｶﾙ	1	
4	216G9-12071	*	DECAL,STARTER-SWITCH	ﾃﾞｶﾙ	1	
5	214A5-53012	*	DECAL,BRAKE-LEVER	ﾃﾞｶﾙ	1	
6	27419-12062	*	DECAL,MAST-CAUTION	ﾃﾞｶﾙ	2	
7	27419-12072	*	DECAL,CROSS-BEAM	ﾃﾞｶﾙ	1	
8	216G9-12062	*	DECAL,TIRE-CAUTION	ﾃﾞｶﾙ	1	
9	216G9-12052	*	DECAL,FAN-CAUTION	ﾃﾞｶﾙ	1	
10	218G9-12072	*	DECAL,FUEL-CAPACITY	ﾃﾞｶﾙ	1	
11	239A9-12051	*	DECAL,LIGHT-OIL	ﾃﾞｶﾙ	1	
12	271A9-12251	*	DECAL,CAUTION	ﾃﾞｶﾙ	1	
13	239A9-12301	*	DECAL,WARNING-PLATE	ﾃﾞｶﾙ	1	
14	26519-12281	*	DECAL,HOSE	ﾃﾞｶﾙ	1	
15	22N59-12351	*	DECAL,BONNET-CAUTION	ﾃﾞｶﾙ	1	
16	214A2-42141	*	DECAL,TURN-SIGNAL	ﾃﾞｶﾙ	1	325-

FIG.176 DECAL (2/2)[EXB]

(F7Z191B0) ﾃﾞｶﾙ(2/2)

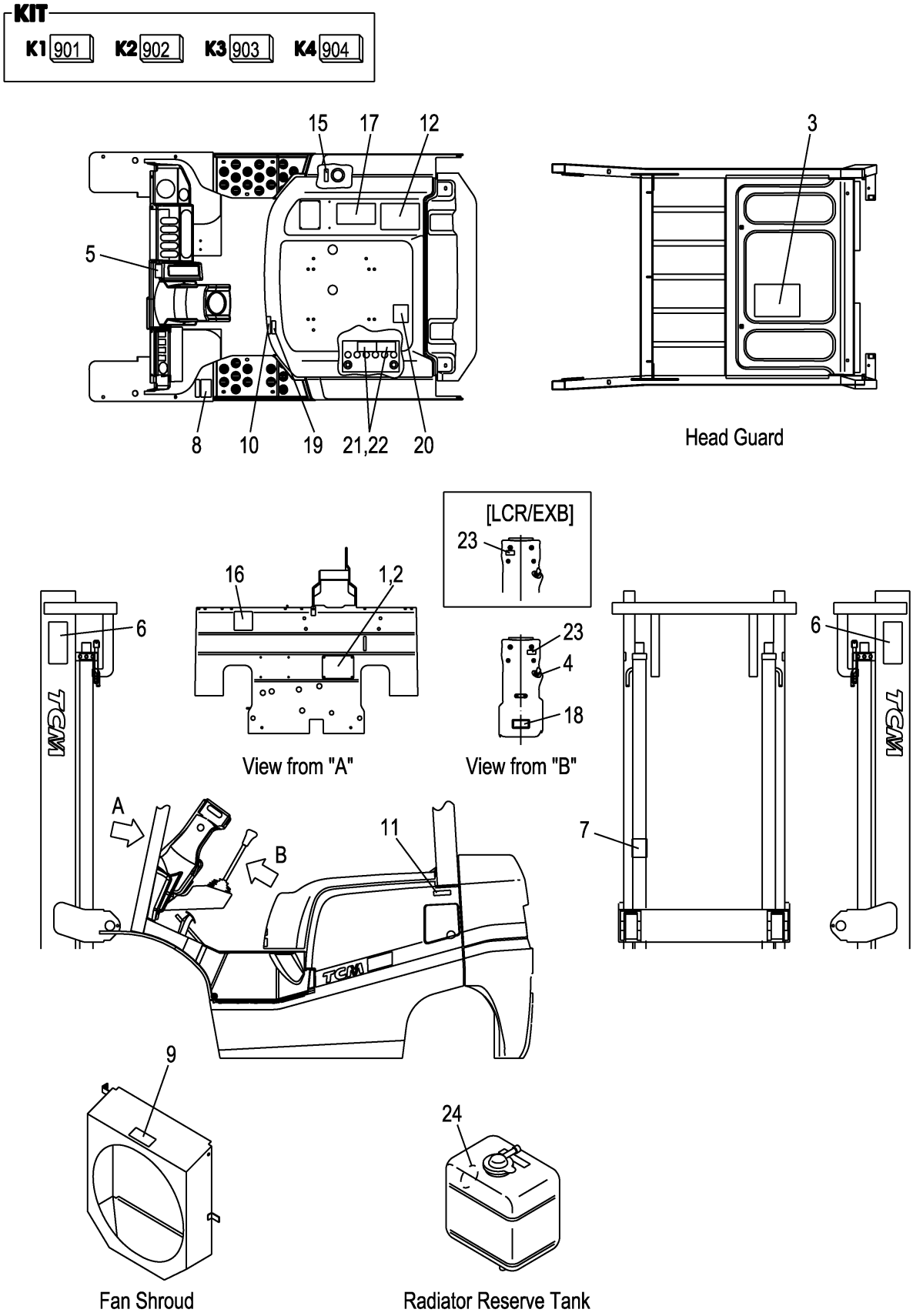

A:FHD15C3Z FHD15T3Z FHD18C3Z FHD18T3Z

Item No	Part No.	Mark	Description		Req'd	Remarks : Serial No.
901	C-11452-0H7-E	K1	KIT,DECAL,ENGLISH	ﾃﾞｶﾙｷｯﾄ	1	[EXB/ENGLISH]
						INC.3-11,16-24,FIG.174:8,9
902	C-11452-0H7-S	K2	KIT,DECAL,SPANISH	ﾃﾞｶﾙｷｯﾄ	1	[EXB/SPANISH]
						INC.3-11,15-24,FIG.174:8,9
-	C-11452-0H7-BF	K2	KIT,DECAL,FRENCH	ﾃﾞｶﾙｷｯﾄ	1	[EXB/FRENCH]
						INC.3-11,15-24,FIG.174:8,9
-	C-11452-0J7-P	K2	KIT,DECAL,PORTUGUESE	ﾃﾞｶﾙｷｯﾄ	1	[EXB/PORTUGUESE]
						INC.8,9,FIG.176:3-11,15-24
903	C-11452-0J7-C	K3	KIT,DECAL,CHINESE	ﾃﾞｶﾙｷｯﾄ	1	[EXB/CHINESE]
						INC.3-12,15-21,23,24,
						FIG.174:8,9
904	C-11452-0J7-R	K4	KIT,DECAL,RUSSIAN	ﾃﾞｶﾙｷｯﾄ	1	[EXB/RUSSIAN]
						INC.3-11,13-24,FIG.174:8,9
1	NO PART NO.	#	PLATE,NAME	ﾌﾟﾚｰﾄ	1	[EXB/ENGLISH]
-	NO PART NO.	#	PLATE,NAME	ﾌﾟﾚｰﾄ	1	[EXB/SPANISH]
-	NO PART NO.	#	PLATE,NAME	ﾌﾟﾚｰﾄ	1	[EXB/FRENCH]
-	NO PART NO.	#	PLATE,NAME	ﾌﾟﾚｰﾄ	1	[EXB/CHINESE]
-	NO PART NO.	#	PLATE,NAME	ﾌﾟﾚｰﾄ	1	[EXB/RUSSIAN]
-	NO PART NO.	#	PLATE,NAME	ﾌﾟﾚｰﾄ	1	[EXB/PORTUGUESE]
2	216G9-12131		RIVET	ﾘﾍﾞｯﾄ	4	[EXB]
3	52N52-72101	*	CHART,LUBRICATION	ﾁｬｰﾄ	1	[EXB/ENGLISH]
-	52N53-82101	*	CHART,LUBRICATION	ﾁｬｰﾄ	1	[EXB/SPANISH]
-	52N53-82111	*	CHART,LUBRICATION	ﾁｬｰﾄ	1	[EXB/FRENCH]
-	52N52-82401	*	CHART,LUBRICATION	ﾁｬｰﾄ	1	[EXB/CHINESE]
-	52N52-82411	*	CHART,LUBRICATION	ﾁｬｰﾄ	1	[EXB/RUSSIAN]
-	52N53-82171	*	CHART,LUBRICATION	ﾁｬｰﾄ	1	[EXB/PORTUGUESE]
4	216G9-12071	*	DECAL,STARTER-SWITCH	ﾃﾞｶﾙ	1	[EXB]
-	516G3-82011	*	DECAL,STARTER-SWITCH	ﾃﾞｶﾙ	1	[EXB/SPANISH]
-	232W9-12001	*	DECAL,STARTER-SWITCH	ﾃﾞｶﾙ	1	[EXB/RUSSIAN]
5	514A3-82002	*	DECAL,BRAKE-LEVER	ﾃﾞｶﾙ	1	[EXB/ENGLISH]
-	514A3-82012	*	DECAL,BRAKE-LEVER	ﾃﾞｶﾙ	1	[EXB/SPANISH]
-	514A3-82022	*	DECAL,BRAKE-LEVER	ﾃﾞｶﾙ	1	[EXB/FRENCH]
-	514A2-82012	*	DECAL,BRAKE-LEVER	ﾃﾞｶﾙ	1	[EXB/CHINESE]
-	225R9-12112	*	DECAL,BRAKE-LEVER	ﾃﾞｶﾙ	1	[EXB/RUSSIAN]
-	514A3-82072	*	DECAL,BRAKE-LEVER	ﾃﾞｶﾙ	1	[EXB/PORTUGUESE]
6	27419-12061	*	DECAL,MAST-CAUTION	ﾃﾞｶﾙ	2	[EXB]
7	27419-12071	*	DECAL,CROSS-BEAM	ﾃﾞｶﾙ	1	[EXB]
8	516G2-72711	*	DECAL,TIRE-CAUTION	ﾃﾞｶﾙ	1	[EXB/ENGLISH]
-	516G3-82211	*	DECAL,TIRE-CAUTION	ﾃﾞｶﾙ	1	[EXB/SPANISH]
-	516G3-82221	*	DECAL,TIRE-CAUTION	ﾃﾞｶﾙ	1	[EXB/FRENCH]
-	516G2-82061	*	DECAL,TIRE-CAUTION	ﾃﾞｶﾙ	1	[EXB/CHINESE]
-	232W9-12021	*	DECAL,TIRE-CAUTION	ﾃﾞｶﾙ	1	[EXB/RUSSIAN]
-	516G3-82271	*	DECAL,TIRE-CAUTION	ﾃﾞｶﾙ	1	[EXB/PORTUGUESE]
9	516G2-72701	*	DECAL,FAN-CAUTION	ﾃﾞｶﾙ	1	[EXB/ENGLISH]
-	516G3-82111	*	DECAL,FAN-CAUTION	ﾃﾞｶﾙ	1	[EXB/SPANISH]
-	516G3-82121	*	DECAL,FAN-CAUTION	ﾃﾞｶﾙ	1	[EXB/FRENCH]
-	516G2-82051	*	DECAL,FAN-CAUTION	ﾃﾞｶﾙ	1	[EXB/CHINESE]
-	232W9-12011	*	DECAL,FAN-CAUTION	ﾃﾞｶﾙ	1	[EXB/RUSSIAN]
-	516G3-82171	*	DECAL,FAN-CAUTION	ﾃﾞｶﾙ	1	[EXB/PORTUGUESE]
10	518G2-82182	*	DECAL,FUEL-CAPACITY	ﾃﾞｶﾙ	1	[EXB/ENGLISH]

FIG.176 DECAL (2/2)[EXB]

(F7Z191B0) ﾃﾞｶﾙ(2/2)

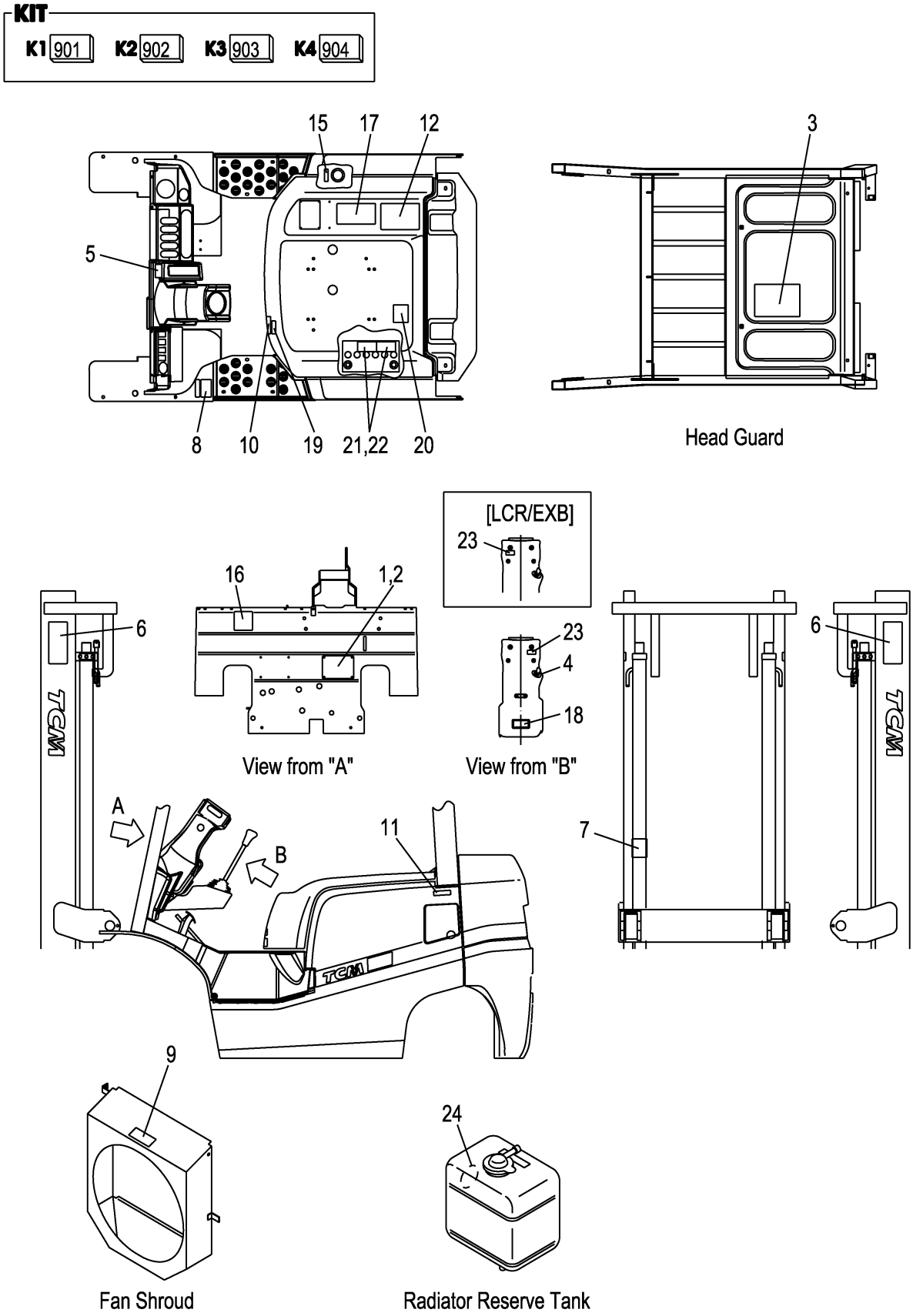

A:FHD15C3Z FHD15T3Z FHD18C3Z FHD18T3Z

Item No	Part No.	Mark	Description	Req'd	Remarks : Serial No.
-	518H3-82002	*	DECAL,FUEL-CAPACITY デカル	1	[EXB/SPANISH]
-	518H3-82012	*	DECAL,FUEL-CAPACITY デカル	1	[EXB/FRENCH]
-	518G2-82282	*	DECAL,FUEL-CAPACITY デカル	1	[EXB/CHINESE]
-	219W9-12072	*	DECAL,FUEL-CAPACITY デカル	1	[EXB/RUSSIAN]
-	518H3-82072	*	DECAL,FUEL-CAPACITY デカル	1	[EXB/PORTUGUESE]
11	509K3-82681	*	DECAL,LIGHT-OIL デカル	1	[EXB/ENGLISH]
-	509K3-82811	*	DECAL,LIGHT-OIL デカル	1	[EXB/SPANISH]
-	509K3-82821	*	DECAL,LIGHT-OIL デカル	1	[EXB/FRENCH]
-	539A2-82051	*	DECAL,LIGHT-OIL デカル	1	[EXB/CHINESE]
-	225R9-12001	*	DECAL,LIGHT-OIL デカル	1	[EXB/RUSSIAN]
-	509K3-82871	*	DECAL,LIGHT-OIL デカル	1	[EXE/PORTUGUESE]
12	53652-82551	*	DECAL,CAUTION デカル	1	[EXB/CHINESE]
13	225R9-12091	+*	DECAL,BATTERY-SWITCH デカル	1	[EXB/RUSSIAN]
14	225R9-12081	+*	DECAL,PAN-HEATER-OIL デカル	1	[EXB/RUSSIAN]
15	53652-82401	*	DECAL,OIL デカル	1	[EXB/SPANISH]
-	53652-82011	*	DECAL,OIL デカル	1	[EXB/FRENCH]
-	53652-82541	*	DECAL,OIL デカル	1	[EXB/CHINESE]
-	225R9-12071	*	DECAL,HYDRAULIC-OIL デカル	1	[EXB/RUSSIAN]
-	522A3-83861	*	DECAL,OIL デカル	1	[EXB/PORTUGUESE]
16	571A3-82361	*	DECAL,CAUTION デカル	1	[EXB]
17	516G3-82801	*	DECAL,CAUTION デカル	1	[EXB/ENGLISH]
-	516G3-82821	*	DECAL,CAUTION デカル	1	[EXB/SPANISH]
-	516G3-82831	*	DECAL,CAUTION デカル	1	[EXB/FRENCH]
-	52672-82073	*	DECAL,WARNING-PLATE デカル	1	[EXB/CHINESE]
-	225R9-12052	*	DECAL,CAUTION デカル	1	[EXB/RUSSIAN]
-	516G3-82881	*	DECAL,CAUTION デカル	1	[EXB/PORTUGUESE]
18	509K2-82251	*	DECAL,STEERING-HOSE デカル	1	[EXB/ENGLISH]
-	509K3-83011	*	DECAL,STEERING-HOSE デカル	1	[EXB/SPANISH]
-	509K3-83021	*	DECAL,STEERING-HOSE デカル	1	[EXB/FRENCH]
-	509K3-83451	*	DECAL,STEERING-HOSE デカル	1	[EXB/CHINESE]
-	509K3-83461	*	DECAL,STEERING-HOSE デカル	1	[EXB/RUSSIAN]
-	509K3-83071	*	DECAL,STEERING-HOSE デカル	1	[EXB/PORTUGUESE]
19	52N52-72201	*	DECAL,BONNET-CAUTION デカル	1	[EXB/ENGLISH]
-	52N53-82301	*	DECAL,BONNET-CAUTION デカル	1	[EXB/SPANISH]
-	52N53-82311	*	DECAL,BONNET-CAUTION デカル	1	[EXB/FRENCH]
-	52N52-82501	*	DECAL,BONNET-CAUTION デカル	1	[EXB/CHINESE]
-	52N52-82511	*	DECAL,BONNET-CAUTION デカル	1	[EXB/RUSSIAN]
-	52N53-82371	*	DECAL,BONNET-CAUTION デカル	1	[EXB/PORTUGUESE]
20	577H3-82151	*	DECAL,GAS-SPRING デカル	1	[EXB/ENGLISH]
-	577H3-82171	*	DECAL,GAS-SPRING デカル	1	[EXB/SPANISH]
-	577H3-82181	*	DECAL,GAS-SPRING デカル	1	[EXB/FRENCH]
-	577H2-82021	*	DECAL,GAS-SPRING デカル	1	[EXB/CHINESE]
-	577H3-82741	*	DECAL,GAS-SPRING デカル	1	[EXB/RUSSIAN]
-	577H3-82231	*	DECAL,GAS-SPRING デカル	1	[EXB/PORTUGUESE]
21	534A3-82311	*	DECAL,BATTERY,A デカル	1	[EXB/ENGLISH]
-	534A3-82331	*	DECAL,BATTERY,A デカル	1	[EXB/SPANISH]
-	534A3-82341	*	DECAL,BATTERY,A デカル	1	[EXB/FRENCH]
-	534A3-82531	*	DECAL,BATTERY デカル	1	[EXB/CHINESE]
-	232W9-12101	*	DECAL,BATTERY,A デカル	1	[EXB/RUSSIAN]
-	534A3-82391	*	DECAL,BATTERY,A デカル	1	[EXB/PORTUGUESE]

FIG.176 DECAL (2/2)[EXB]

(F7Z191B0) ﾃﾞｶﾙ(2/2)

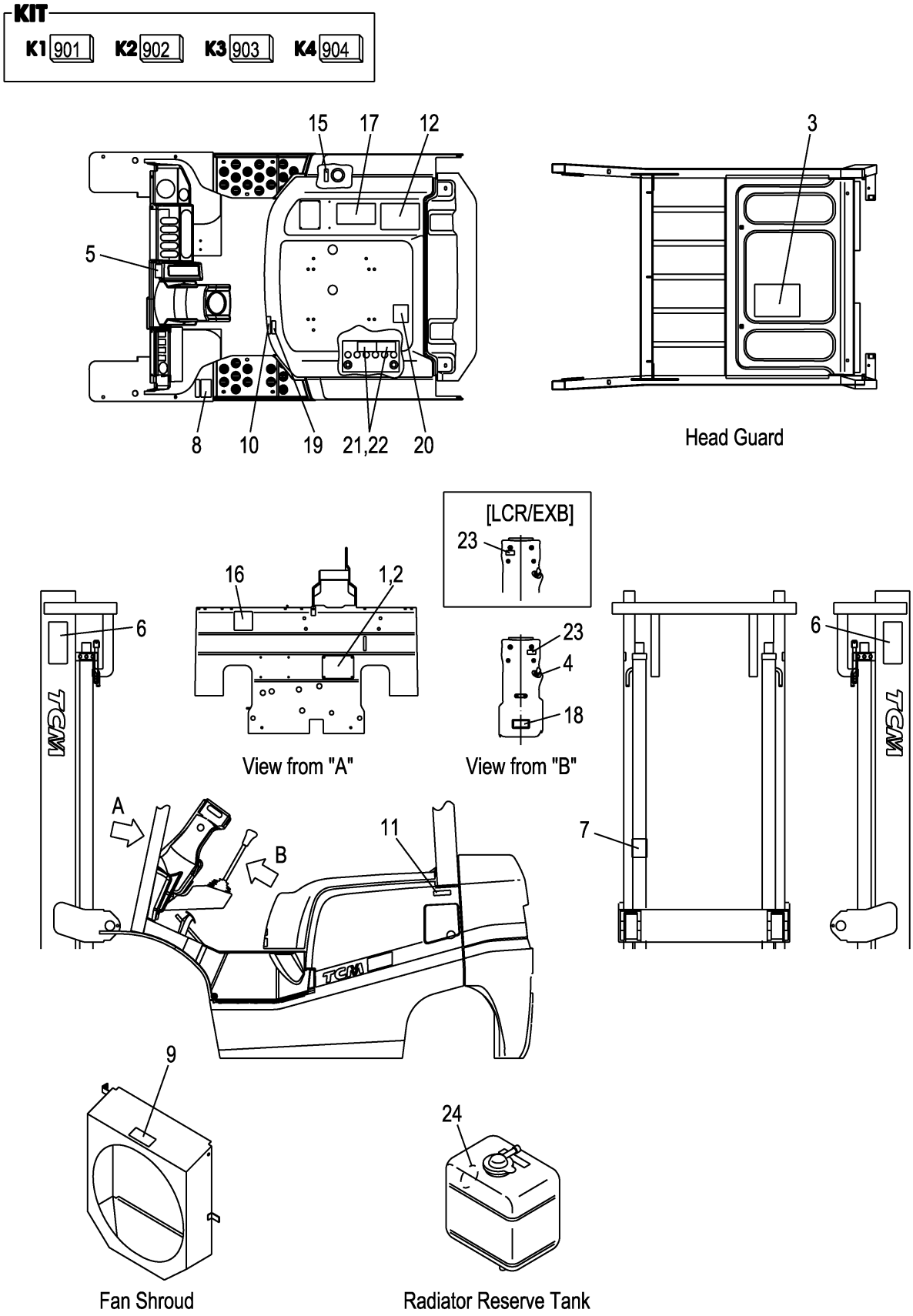

A:FHD15C3Z FHD15T3Z FHD18C3Z FHD18T3Z

Item No	Part No.	Mark	Description	Req'd	Remarks : Serial No.
22	534A3-82421	*	DECAL,BATTERY,B デカル	1	[EXB/ENGLISH]
-	534A3-82441	*	DECAL,BATTERY,B デカル	1	[EXB/SPANISH]
-	534A3-82451	*	DECAL,BATTERY,B デカル	1	[EXB/FRENCH]
-	232W9-12111	*	DECAL,BATTERY,B デカル	1	[EXB/RUSSIAN]
-	534A3-82501	*	DECAL,BATTERY,B デカル	1	[EXB/PORTUGUESE]
23	214A2-42141	*	DECAL,TURN-SIGNAL デカル	1	325-
					[EXB]
24	23659-12101	*	DECAL,LIFE-COOLANT デカル	1	[EXB]
-	522A3-82641	*	DECAL,LIFE-COOLANT デカル	1	[EXB/SPANISH]
-	522A3-82841	*	DECAL,LIFE-COOLANT デカル	1	[EXB/FRENCH]
-	232W9-12051	*	DECAL,LIFE-COOLANT デカル	1	[EXB/RUSSIAN]
-	522A3-83841	*	DECAL,LIFE-COOLANT デカル	1	[EXB/PORTUGUESE]

FIG.177 SERVICE TOOL [TO][EX]

(F7Z19210) サービスツール

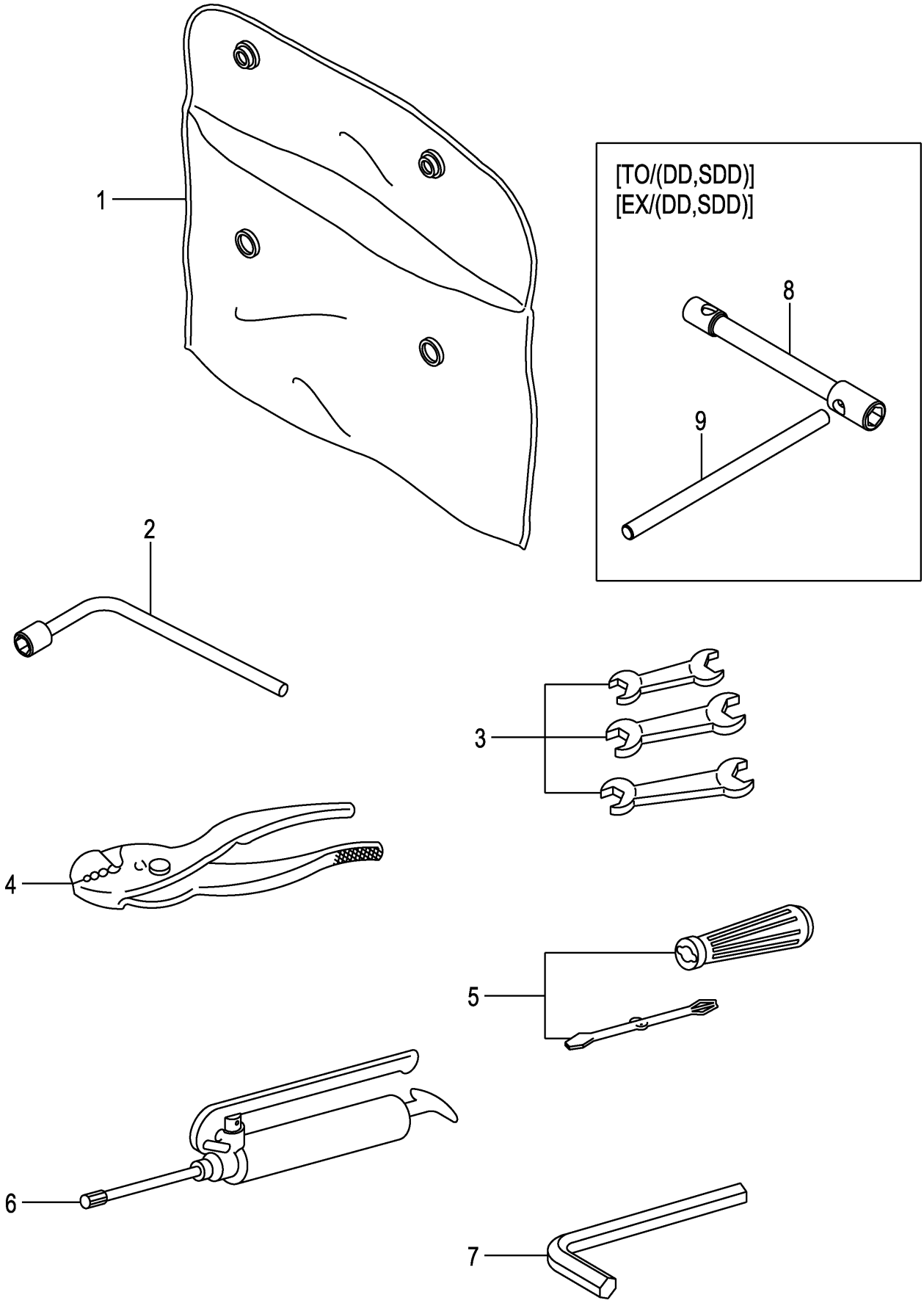

A:FHD15C3Z FHD15T3Z FHD18C3Z FHD18T3Z

Item No	Part No.	Mark	Description		Req'd	Remarks : Serial No.
1	214A9-20101		SACK,SERVICE-TOOLS	ｻｯｸ	1	[TO][EX]
2	22199-22251		WRENCH,HUB-NUT,21MM	ﾚﾝﾁ	1	[TO][EX]
3	25599-22051		SET,SPANNER	ｽﾊﾟﾅｾｯﾄ	1	[TO][EX]
4	23019-20011		PLIER,150MM	ﾌﾟﾗｲﾔ	1	[TO][EX]
5	22199-22261		SET,DRIVER	ﾄﾞﾗｲﾊﾞｾｯﾄ	1	[TO][EX]
6	22199-22001		GUN,GREASE	ｶﾞﾝ	1	[TO][EX]
7	25599-22061		WRENCH,HEXAGON	ﾚﾝﾁ	1	[TO][EX]
8	24239-22001		WRENCH,HUB-NUT	ﾚﾝﾁ	1	[TO/DD][TO/SDD][EX/DD] [EX/SDD]
9	20319-20041		LEVER,WRENCH,HUB-NUT	ﾚﾊﾞｰ	1	[TO/DD][TO/SDD][EX/DD] [EX/SDD]

FIG.178 TOOL BOX [TOB]

(F7Z19220) ﾂｰﾙﾎﾞｯｸｽ

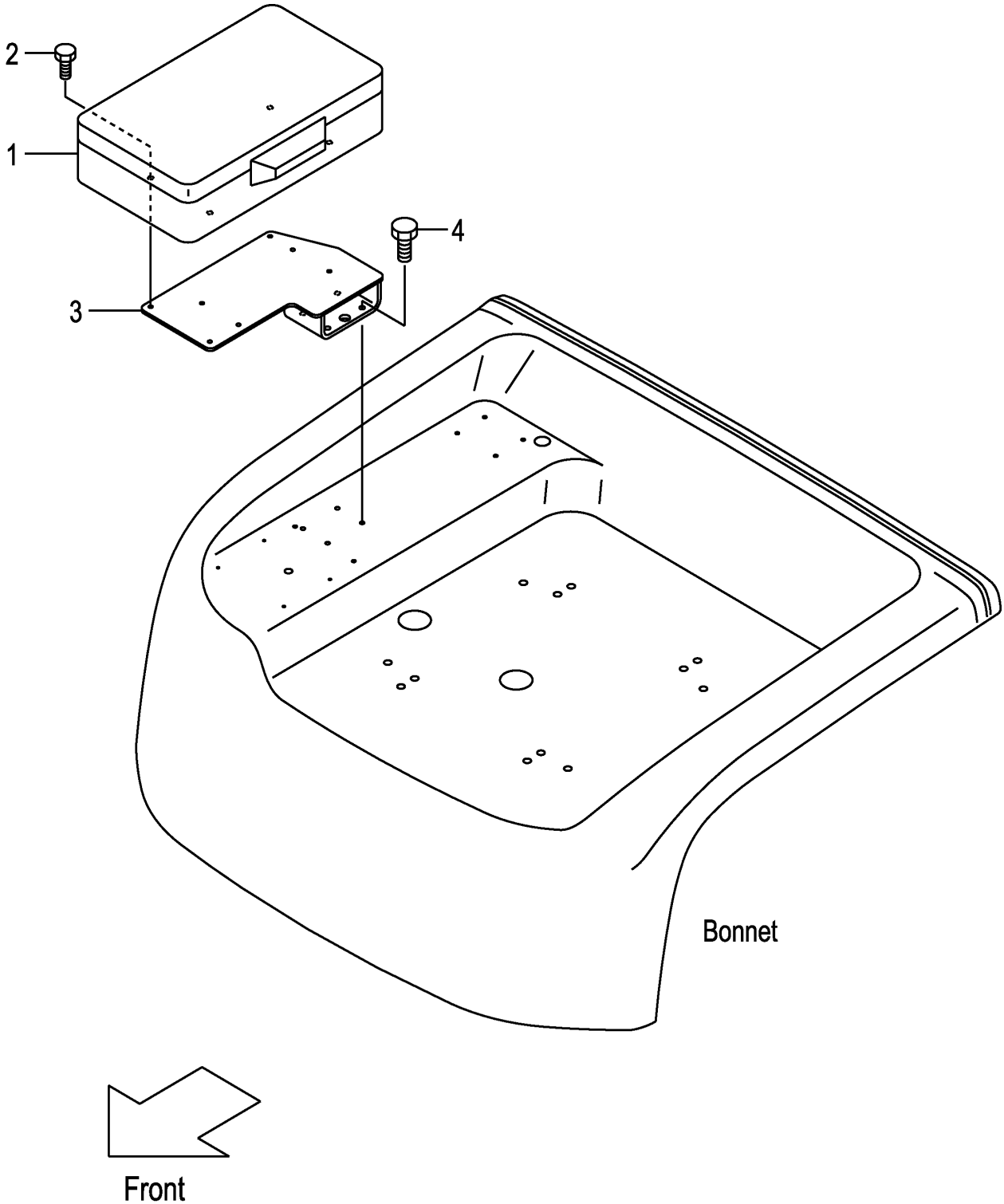

FIG.178

(F7Z19220)

A:FHD15C3Z FHD15T3Z FHD18C3Z FHD18T3Z

Item No	Part No.	Mark	Description		Req'd	Remarks : Serial No.
1	52N59-20441		BOX,TOOL	ﾎﾞｯｸｽ	1	[TOB]
2	01185-06012		BOLT	ﾎﾞﾙﾄ	4	[TOB]
3	52N59-20401		BRACKET	ﾌﾞﾗｹｯﾄ	1	[TOB]
4	01183-08020		BOLT	ﾎﾞﾙﾄ	4	[TOB]

FIG.179 FRONT GLASS [AW061][AW071]

(F7Z19310) フロントガラス

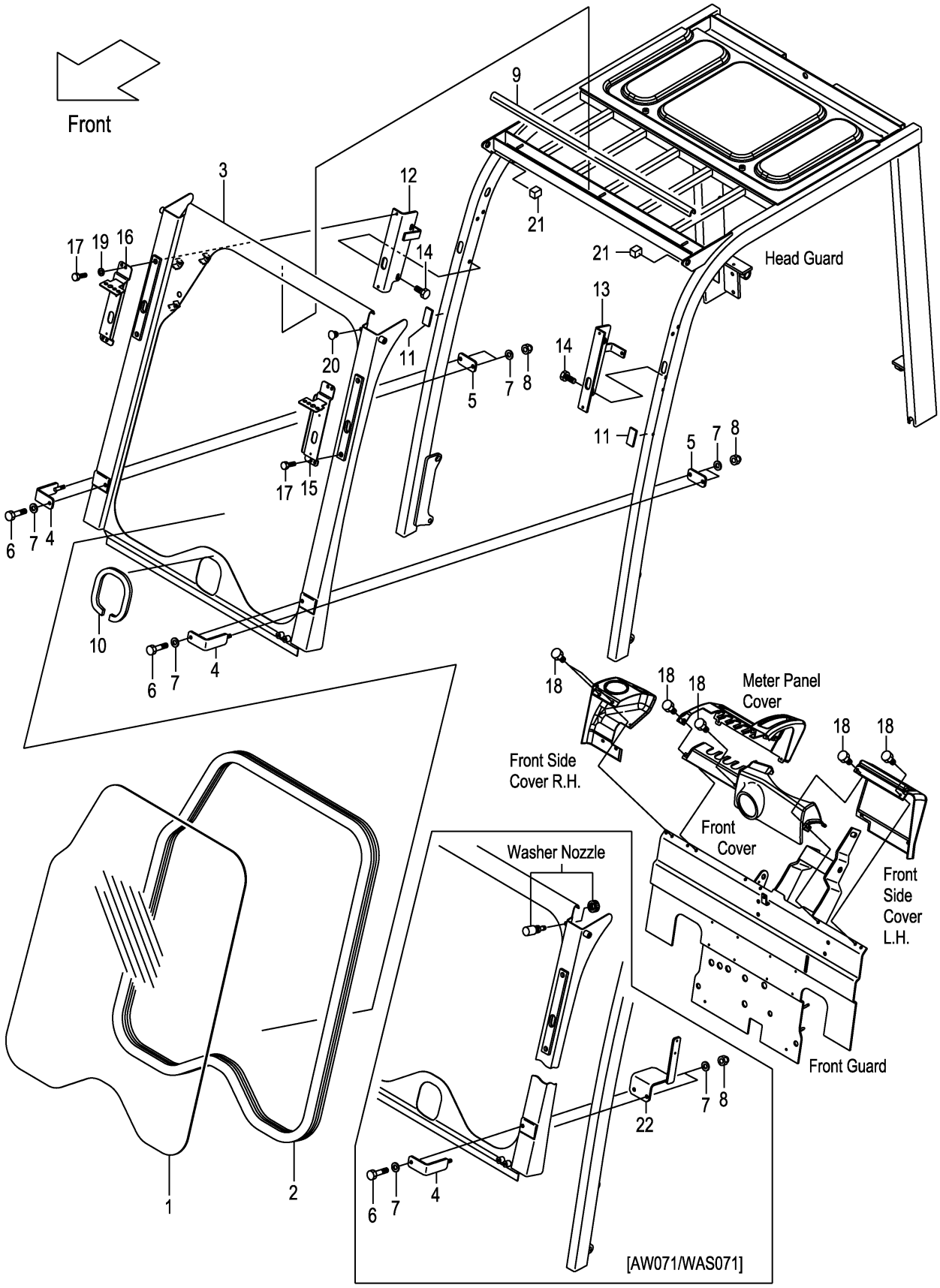

FIG.179

(F7Z19310)

A:FHD15C3Z FHD15T3Z FHD18C3Z FHD18T3Z

Item No	Part No.	Mark	Description		Req'd	Remarks : Serial No.
A1	50A75-40051		SUPPORT-ASSY,GLASS	ｶﾞﾗｽｻﾎﾟｰﾄｱｯｾﾝ	1	[AW061][AW071] INC.1-3
1	50A75-42081		GLASS	ｶﾞﾗｽ	1	[AW061][AW071]
2	524W5-42051		H-RUBBER	Hﾗﾊﾞｰ	1	[AW061][AW071]
3	50A75-40101		SUPPORT,GLASS	ｻﾎﾟｰﾄ	1	[AW061][AW071]
4	52N55-42101		CLAMP	ｸﾗﾝﾌﾟ	2	[AW061][AW071]
5	52N55-42161		PLATE	ﾌﾟﾚｰﾄ	2	[AW061][AW071]
-	52N55-42161		PLATE	ﾌﾟﾚｰﾄ	1	[AW071/WAS071]
6	01101-10130		BOLT	ﾎﾞﾙﾄ	2	[AW061][AW071]
7	02000-20010		WASHER	ﾜｯｼｬ	6	[AW061][AW071]
8	53671-92821		NUT,DOMED-CAP	ﾅｯﾄ	4	[AW061][AW071]
9	529F5-42041		RUBBER	ﾗﾊﾞｰ	1	[AW061][AW071]
10	55535-42161		RUBBER	ﾗﾊﾞｰ	1	[AW061][AW071]
11	529F5-42061		RUBBER,SEAL	ﾗﾊﾞｰ	2	[AW061][AW071]
12	52N55-42111		BRACKET,RH	ﾌﾞﾗｹｯﾄ	1	[AW061][AW071]
13	52N55-42121		BRACKET,LH	ﾌﾞﾗｹｯﾄ	1	[AW061][AW071]
14	01185-08020		BOLT	ﾎﾞﾙﾄ	4	[AW061][AW071]
15	239A5-12521		BRACKET,HEAD-LAMP,LH	ﾌﾞﾗｹｯﾄ	1	[AW061][AW071]
16	239A5-12501		BRACKET,HEAD-LAMP,RH	ﾌﾞﾗｹｯﾄ	1	[AW061][AW071]
17	01183-08025		BOLT	ﾎﾞﾙﾄ	4	[AW061][AW071]
18	52N55-32291		BOLT	ﾎﾞﾙﾄ	6	[AW061][AW071]
19	02000-00008		WASHER	ﾜｯｼｬ	2	[AW061][AW071]
20	281E6-42571		PLUG,HOLE	ﾌﾟﾗｸﾞ	1	[AW061][AW071]
						(WITHOUT AW071/WAS071)
21	52N55-42071		RUBBER	ﾗﾊﾞｰ	2	[AW061][AW071]
22	52N55-40401		BRACKET,TANK	ﾌﾞﾗｹｯﾄ	1	[AW071/WAS071]

FIG.180 FRONT GLASS WIPER [AW061][AW071]

(F7Z19320) ﾌﾛﾝﾄｶﾞﾗｽﾜｲﾊﾟ

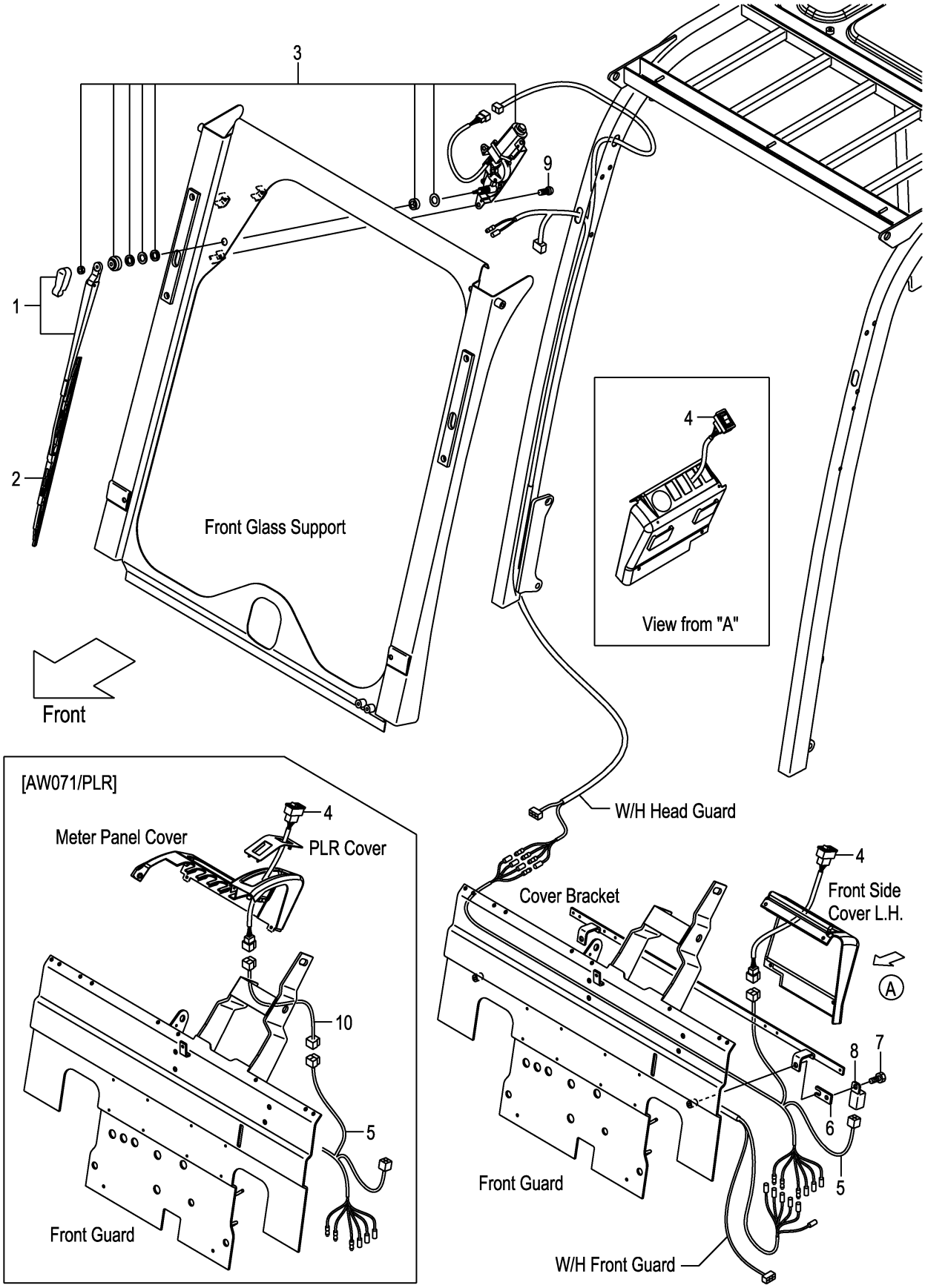

FIG.180

(F7Z19320)

A:FHD15C3Z FHD15T3Z FHD18C3Z FHD18T3Z

Item No	Part No.	Mark	Description		Req'd	Remarks : Serial No.
1	52N55-42181		ARM,WIPER	ｱｰﾑ	1	[AW061][AW071]
2	52N55-42191		BLADE,WIPER	ﾌﾞﾚｰﾄﾞ	1	[AW061][AW071]
3	52N55-42171		MOTOR,WIPER	ﾓｰﾀ	1	[AW061][AW071]
4	52N55-42201		SWITCH,WIPER	ｽｲｯﾁ	1	[AW061][AW071]
5	52N55-42211		WIRE-HARNESS,WIPER	ﾜｲﾔﾊｰﾈｽ	1	[AW061][AW071]
6	52N55-42221		PLATE	ﾌﾟﾚｰﾄ	1	[AW061][AW071]
7	01030-06012		SCREW	ｽｸﾘｭ	1	[AW061][AW071]
8	209K2-42351		RELAY,1A	ﾘﾚｰ	1	[AW061][AW071]
9	214A6-42911		SCREW	ｽｸﾘｭ	3	[AW061][AW071]
10	52N55-42351		WIRE-HARNESS	ﾜｲﾔﾊｰﾈｽ	1	[AW071/PLR]
11	01185-08065	+	BOLT	ﾎﾞﾙﾄ	4	[AW061][AW071]

FIG.181 WINDOW WASHER [AW071/WAS071]

(F7Z19330) ｳｨﾝﾄﾞｳｫｯｼｬ

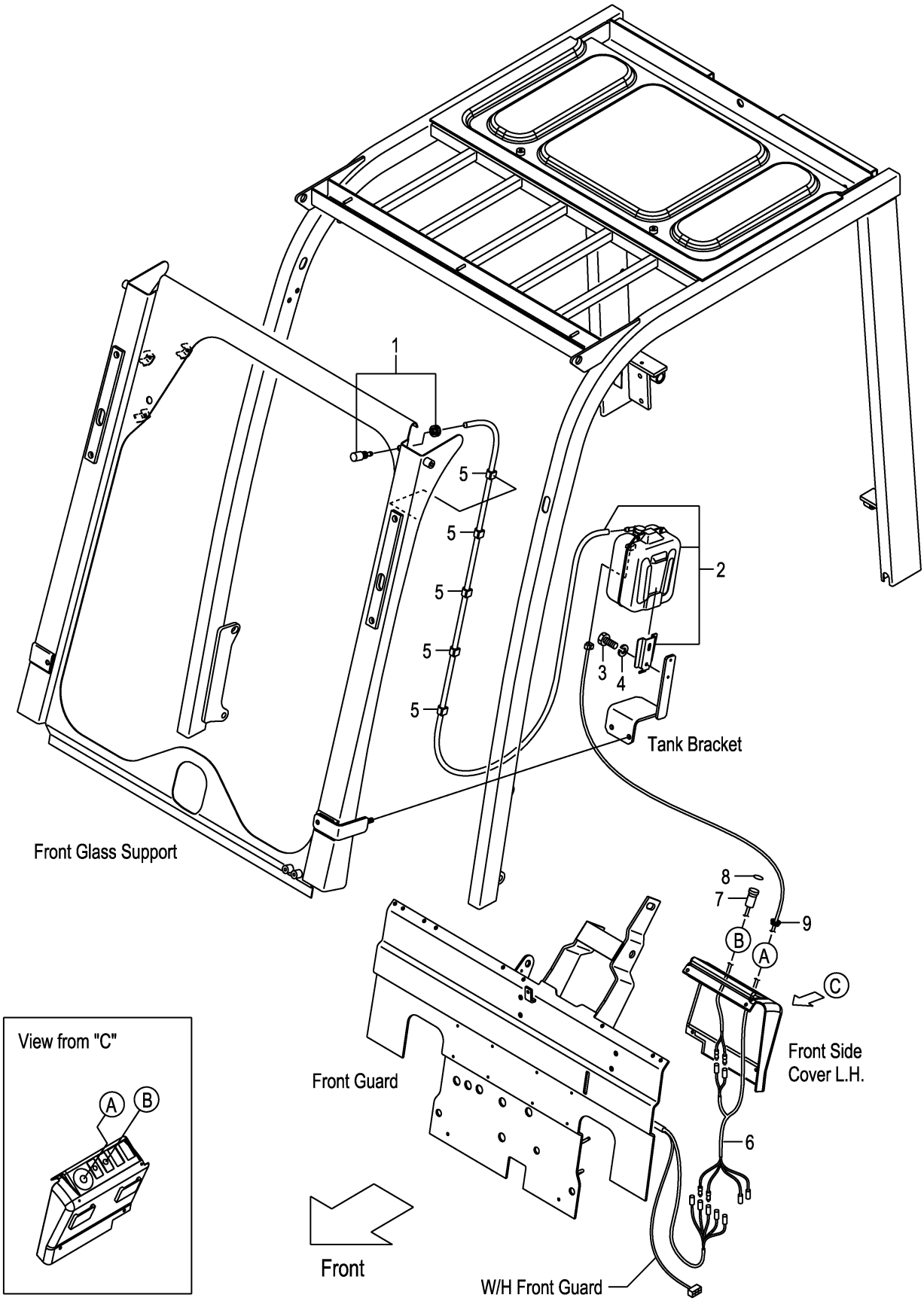

FIG.181

(F7Z19330)

A:FHD15C3Z FHD15T3Z FHD18C3Z FHD18T3Z

Item No	Part No.	Mark	Description		Req'd	Remarks : Serial No.
1	52N55-40301		NOZZLE,WASHER	ﾉｽﾞﾙ	1	[AW071/WAS071]
2	52N55-40311		TANK & PUMP,WASHER	ﾀﾝｸ&ﾎﾟﾝﾌﾟ	1	[AW071/WAS071]
3	01100-06010		BOLT	ﾎﾞﾙﾄ	2	[AW071/WAS071]
4	02010-00006		WASHER	ﾜｯｼｬ	2	[AW071/WAS071]
5	256C2-42271		CLIP	ｸﾘｯﾌﾟ	5	[AW071/WAS071]
6	52N55-42421		WIRE-HARNESS,WASHER	ﾜｲﾔﾊｰﾈｽ	1	[AW071/WAS071]
7	27042-64561		SWITCH	ｽｲｯﾁ	1	[AW071/WAS071]
8	52N55-42451		DECAL,WASHER	ﾃﾞｶﾙ	1	[AW071/WAS071]
9	221A2-42031		GROMMET	ｸﾞﾛﾒｯﾄ	1	[AW071/WAS071]

FIG.182 CANVAS CABIN [AW061]

(F7Z19340) キャンバスキャビン

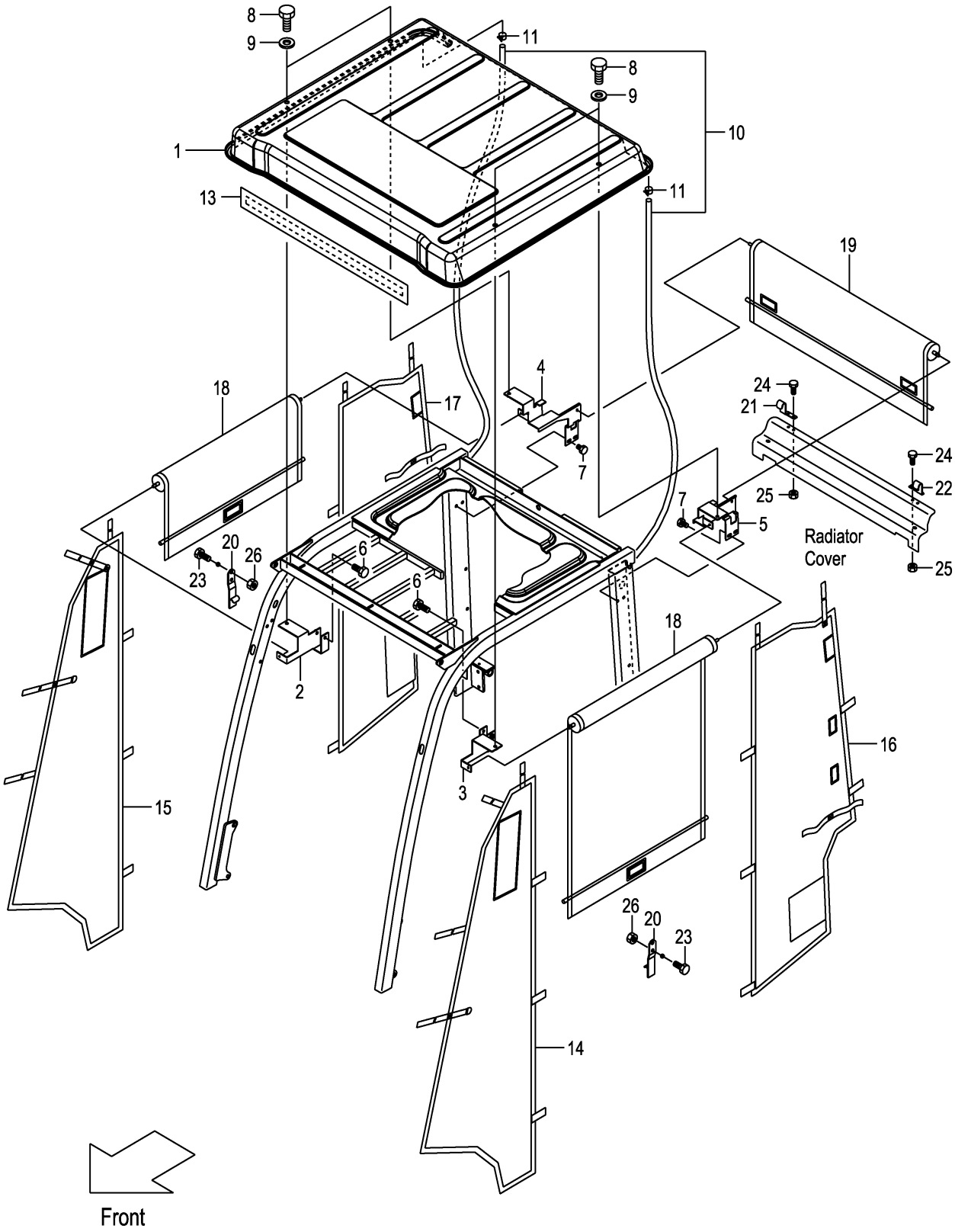

A:FHD15C3Z FHD15T3Z FHD18C3Z FHD18T3Z

Item No	Part No.	Mark	Description		Req'd	Remarks : Serial No.
A1	50A75-40201		CABIN-ASSY,FULL-OPEN	フルオープンキャビンアッセン	1	[AW061] INC.1-26
A2	50A75-40251		SUNROOF-ASSY	サンルーフアッセン	1	[AW061] INC.1-12
1	52N55-42501		SUNROOF	サンルーフ	1	[AW061]
2	52N55-42511		BRACKET,AR	ブラケット	1	[AW061]
3	52N55-42521		BRACKET,AL	ブラケット	1	[AW061]
4	50A75-42531		BRACKET,BR	ブラケット	1	[AW061]
5	50A75-42541		BRACKET,BL	ブラケット	1	[AW061]
6	01186-10065		BOLT	ボルト	2	[AW061]
7	01185-08020		BOLT	ボルト	4	[AW061]
8	01100-10016		BOLT	ボルト	4	[AW061]
9	55595-42251		WASHER,NYLON	ワッシャ	4	[AW061]
10	52N55-42731		HOSE	ホース	1	[AW061]
11	52N55-42741		BAND	バンド	2	[AW061]
12	52N55-42751	+	SPONGE	スポンジ	1	[AW061]
13	52N55-42551		COVER,TOP	カバー	1	[AW061]
14	52N55-42561		COVER,FRONT,LH	カバー	1	[AW061]
15	52N55-42571		COVER,FRONT,RH	カバー	1	[AW061]
16	50A75-42581		COVER,REAR,LH	カバー	1	[AW061]
17	50A75-42591		COVER,REAR,RH	カバー	1	[AW061]
18	52N55-42701		ROLL,SIDE	ロール	2	[AW061]
19	52N55-42711		ROLL,REAR	ロール	1	[AW061]
20	50A75-42721		STOPPER,SIDE	ストッパ	2	[AW061]
21	534A5-43081		STOPPER,REAR-ROLL,RH	ストッパ	1	[AW061]
22	534A5-43091		STOPPER,REAR-ROLL,LH	ストッパ	1	[AW061]
23	01185-08020		BOLT	ボルト	4	[AW061]
24	01185-06020		BOLT	ボルト	4	[AW061]
25	01400-00006		NUT	ナット	4	[AW061]
26	01400-00008		NUT	ナット	4	[AW061]

FIG.183 CENTRAL LUBLICATION [CL]

(F7Z19350) セントラルルブリケーション

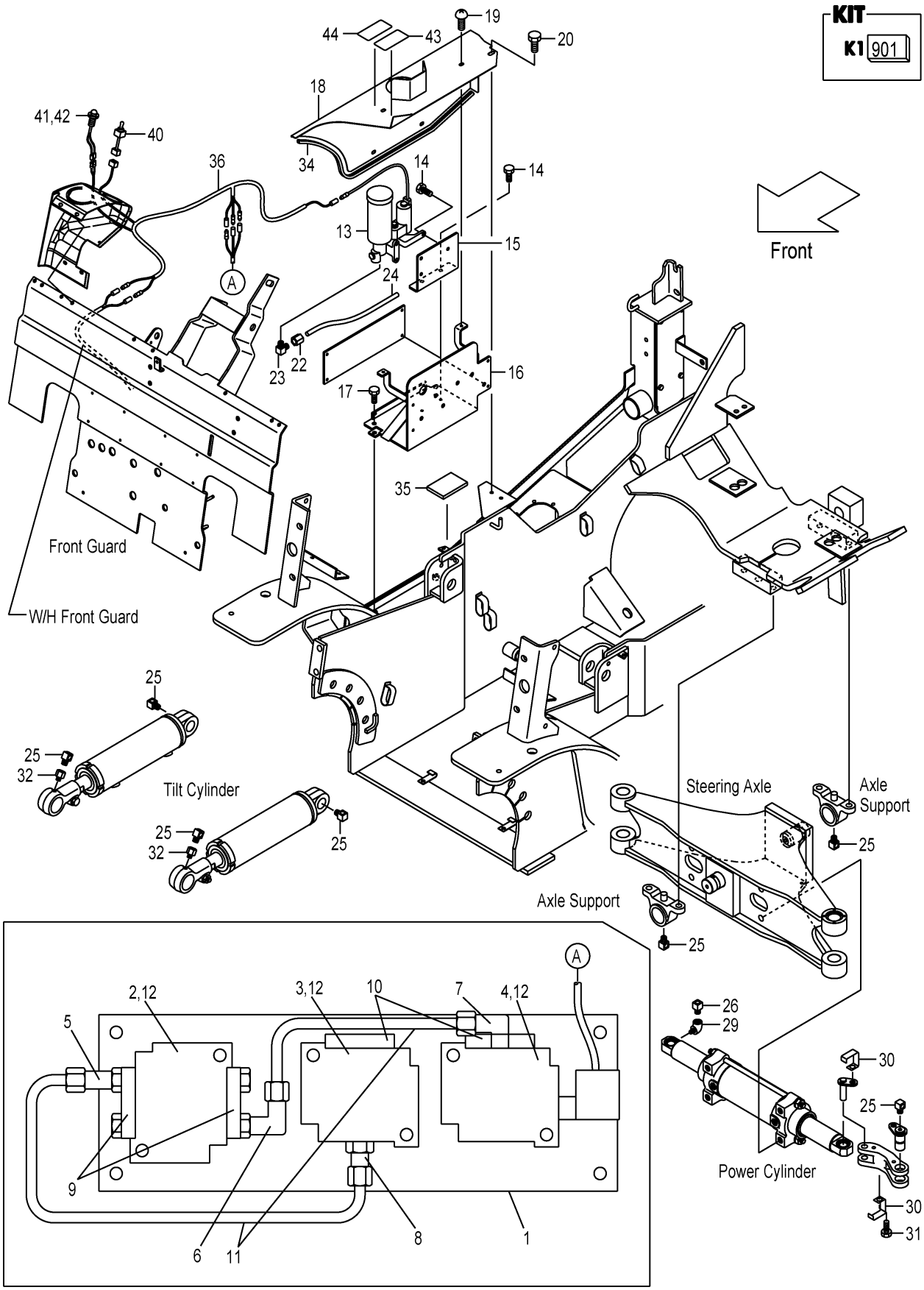

A:FHD15C3Z FHD15T3Z FHD18C3Z FHD18T3Z

Item No	Part No.	Mark	Description		Req'd	Remarks : Serial No.
901	543G1-02001	K1	KIT,A,AUTO-GREASTER	ｵｰﾄｸﾞﾘｽﾀｷｯﾄ	1	[CL] INC.1-11
1	543G1-02021	*	PLATE	ﾌﾟﾚｰﾄ	1	[CL]
2	543G1-02031	*	DISTRIBUTER,1	ﾃﾞｨｽﾄﾘﾋﾞｭｰﾀ	1	[CL]
3	543G1-02041	*	DISTRIBUTER,2	ﾃﾞｨｽﾄﾘﾋﾞｭｰﾀ	1	[CL]
4	543G1-02051	*	DISTRIBUTER,3	ﾃﾞｨｽﾄﾘﾋﾞｭｰﾀ	1	[CL]
5	543G1-02081	*	CONNECTOR	ｺﾈｸﾀ	1	[CL]
6	543G1-02101	*	ELBOW	ｴﾙﾎﾞ	1	[CL]
7	543G1-02111	*	ELBOW	ｴﾙﾎﾞ	1	[CL]
8	543G1-02091	*	CONNECTOR	ｺﾈｸﾀ	1	[CL]
9	543G1-02061	*	CONNECTOR,SUB	ｺﾈｸﾀ	2	[CL]
10	543G1-02071	*	CONNECTOR,SUB	ｺﾈｸﾀ	2	[CL]
11	543G1-02121	*	PIPE	ﾊﾟｲﾌﾟ	1	[CL]
12	01183-06016		BOLT	ﾎﾞﾙﾄ	6	[CL]
13	522A1-02001		PUMP,GREASE	ﾎﾟﾝﾌﾟ	1	[CL]
14	01183-08016		BOLT	ﾎﾞﾙﾄ	5	[CL]
15	52N51-02021		PLATE	ﾌﾟﾚｰﾄ	1	[CL]
16	50A71-00101		BRACKET	ﾌﾞﾗｹｯﾄ	1	[CL]
17	01183-08020		BOLT	ﾎﾞﾙﾄ	2	[CL]
18	50A71-00121		COVER	ｶﾊﾞｰ	1	[CL]
19	214A6-42252		SCREW	ｽｸﾘｭ	4	[CL]
20	01185-08016		BOLT	ﾎﾞﾙﾄ	1	[CL]
21	04913-11100	+	BAND	ﾊﾞﾝﾄﾞ	30	[CL]
22	522A1-02031		CONNECTOR	ｺﾈｸﾀ	1	[CL]
23	509P6-92201		ELBOW	ｴﾙﾎﾞ	1	[CL]
24	524W1-02171		PIPE	ﾊﾟｲﾌﾟ	1	[CL]
25	543G1-02311		FITTING	ﾌｨｯﾃｨﾝｸﾞ	14	[CL]
26	543G1-02331		FITTING	ﾌｨｯﾃｨﾝｸﾞ	18	[CL]
27	543G1-02341	+	TUBE	ﾁｭｰﾌﾞ	1	[CL]
28	23678-42421	+	BAND,CABLE	ﾊﾞﾝﾄﾞ	20	[CL]
29	52N51-03001		ADAPTER	ｱﾀﾞﾌﾟﾀ	2	[CL]
30	22N55-42191		CLIP	ｸﾘｯﾌﾟ	12	[CL]
31	01185-08012		BOLT	ﾎﾞﾙﾄ	8	[CL]
32	581E1-02201		ADAPTER	ｱﾀﾞﾌﾟﾀ	2	[CL]
33	273A6-12421	+	PLATE,TAPPED	ﾌﾟﾚｰﾄ	7	[CL]
34	222A6-42381		EDGING	ｴｯｼﾞﾝｸﾞ	2	[CL]
35	239B2-42301		RUBBER	ﾗﾊﾞｰ	1	[CL]
36	543G1-02401		WIRE-HARNESS	ﾜｲﾔﾊｰﾈｽ	1	[CL]
37	524W1-02191	+	TUBE,CORRUGATE	ﾁｭｰﾌﾞ	3	[CL]
38	524W1-02201	+	TUBE,CORRUGATE	ﾁｭｰﾌﾞ	3	[CL]
39	27732-42311	+	CLAMP	ｸﾗﾝﾌﾟ	2	[CL]
40	543G1-02411		SWITCH	ｽｲｯﾁ	1	[CL]
41	24602-42151		LAMP,PILOT	ﾗﾝﾌﾟ	1	[CL] INC.42
42	23652-43081		BULB	ﾊﾞﾙﾌﾞ	1	[CL]
43	543G1-02451		DECAL,CAUTION	ﾃﾞｶﾙ	1	[CL]
44	52N51-02101		DECAL,CAUTION	ﾃﾞｶﾙ	1	[CL]

FIG.184 FIRE EXTINGUISHER [FE][FE M]

(F7Z193K0) ﾌｧｲﾔｲｸｽﾃｨﾝｸﾞｲｯｼｬ

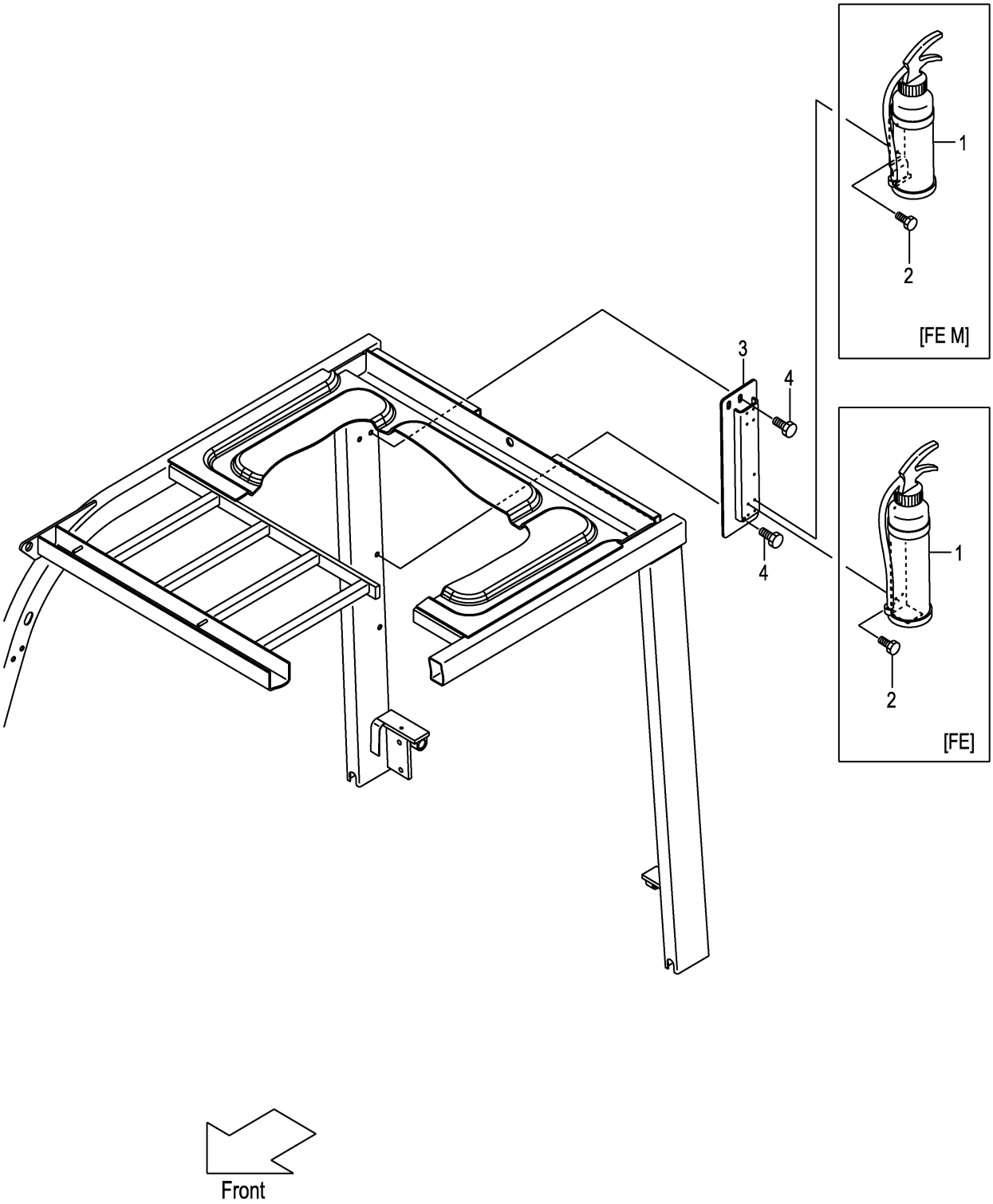

A:FHD15C3Z FHD15T3Z FHD18C3Z FHD18T3Z

Item No	Part No.	Mark	Description		Req'd	Remarks : Serial No.
1	22679-12102		EXTINGUISHER,FIRE	ｲｸｽﾃｨﾝｸﾞｲｯｼｬ	1	[FE]
-	271A9-12191		EXTINGUISHER,FIRE	ｲｸｽﾃｨﾝｸﾞｲｯｼｬ	1	[FE M]
2	01183-05012		BOLT	ﾎﾞﾙﾄ	4	[FE]
-	01183-05012		BOLT	ﾎﾞﾙﾄ	2	[FE M]
3	52N59-62001		BRACKET,FE	ﾌﾞﾗｹｯﾄ	1	[FE][FE M]
4	01185-08020		BOLT	ﾎﾞﾙﾄ	3	[FE][FE M]

FIG.185 FORK [VM0A7,VM0A9]

(M7018110) フォーク

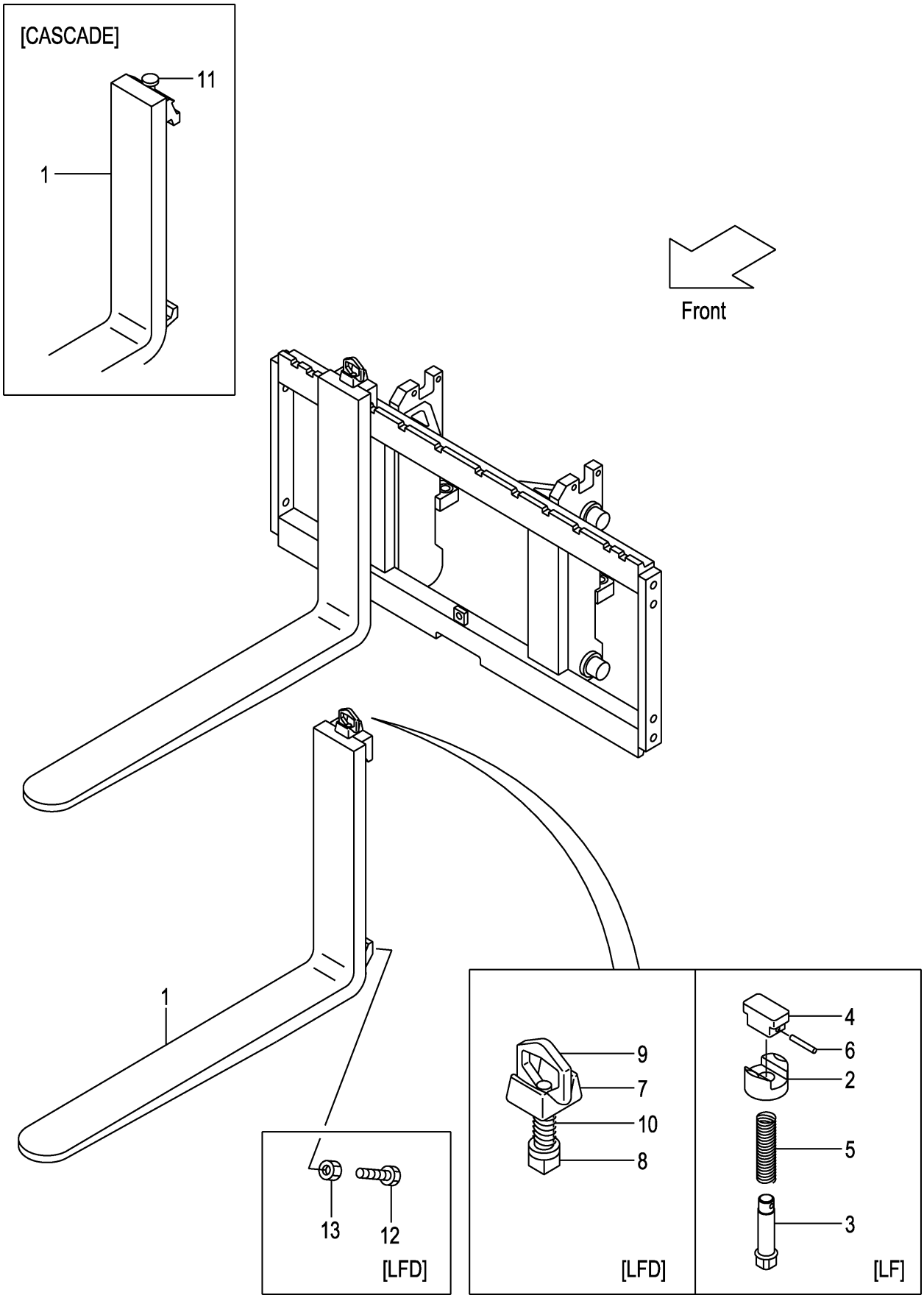

A:VMOA7(1.0T)
B:VMOA7(1.5T)
C:VMOA9(1.8T)

FIG.185
(M7018110)

Item No	Part No.	Mark	Description		Req'd	Remarks : Serial No.
1	210B8-10502		FORK	ﾌｫｰｸ	2	A
						(L=770) INC.2-6
-	210F8-10512		FORK	ﾌｫｰｸ	2	B,C
						(L=920) INC.2-6
-	210B8-10502		FORK	ﾌｫｰｸ	2	A
						[LF077] INC.2-6
-	210B8-10512		FORK	ﾌｫｰｸ	2	A
						[LF085] INC.2-6
-	210F8-10502		FORK	ﾌｫｰｸ	2	B,C
						[LF085] INC.2-6
-	210F8-10572		FORK	ﾌｫｰｸ	2	A
						[LF090] INC.2-6
-	210B8-10522		FORK	ﾌｫｰｸ	2	A
						[LF092] INC.2-6
-	210F8-10512		FORK	ﾌｫｰｸ	2	B,C
						[LF092] INC.2-6
-	210F8-10512		FORK	ﾌｫｰｸ	2	[EX] INC.2-6
-	210F8-10582		FORK	ﾌｫｰｸ	2	[LF100] INC.2-6
-	210F8-10522		FORK	ﾌｫｰｸ	2	[LF107] INC.2-6
-	210F8-10592		FORK	ﾌｫｰｸ	2	[LF110] INC.2-6
-	210F8-10602		FORK	ﾌｫｰｸ	2	[LF120] INC.2-6
-	210F8-10532		FORK	ﾌｫｰｸ	2	[LF122] INC.2-6
-	210H8-10612		FORK	ﾌｫｰｸ	2	[LF130] INC.2-6
-	210H8-10532		FORK	ﾌｫｰｸ	2	[LF137] INC.2-6
-	210H8-10622		FORK	ﾌｫｰｸ	2	[LF140] INC.2-6
-	210H8-10632		FORK	ﾌｫｰｸ	2	[LF150] INC.2-6
-	210H8-10542		FORK	ﾌｫｰｸ	2	[LF152] INC.2-6
-	210H8-10642		FORK	ﾌｫｰｸ	2	[LF160] INC.2-6
-	210H8-10552		FORK	ﾌｫｰｸ	2	B,C
						[LF167] INC.2-6
-	216B8-10301		FORK	ﾌｫｰｸ	2	A
						[LFD077] INC.7-10
-	216B8-10311		FORK	ﾌｫｰｸ	2	A
						[LFD085] INC.7-10
-	216G8-10301		FORK	ﾌｫｰｸ	2	B,C
						[LFD085] INC.7-10
-	216G8-10371		FORK	ﾌｫｰｸ	2	[LFD090] INC.7-10
-	216B8-10321		FORK	ﾌｫｰｸ	2	A
						[LFD092] INC.7-10
-	216G8-10311		FORK	ﾌｫｰｸ	2	B,C
						[LFD092] INC.7-10
-	216G8-10381		FORK	ﾌｫｰｸ	2	[LFD100] INC.7-10
-	216G8-10321		FORK	ﾌｫｰｸ	2	[LFD107] INC.7-10
-	216G8-10391		FORK	ﾌｫｰｸ	2	[LFD110] INC.7-10
-	216G8-10401		FORK	ﾌｫｰｸ	2	[LFD120] INC.7-10
-	216G8-10331		FORK	ﾌｫｰｸ	2	[LFD122] INC.7-10
-	216G8-10411		FORK	ﾌｫｰｸ	2	[LFD130] INC.7-10
-	216G8-10341		FORK	ﾌｫｰｸ	2	[LFD137] INC.7-10
-	216G8-10421		FORK	ﾌｫｰｸ	2	[LFD140] INC.7-10
-	216G8-10431		FORK	ﾌｫｰｸ	2	[LFD150] INC.7-10

FIG.185 FORK [VM0A7,VM0A9]

(M7018110) フォーク

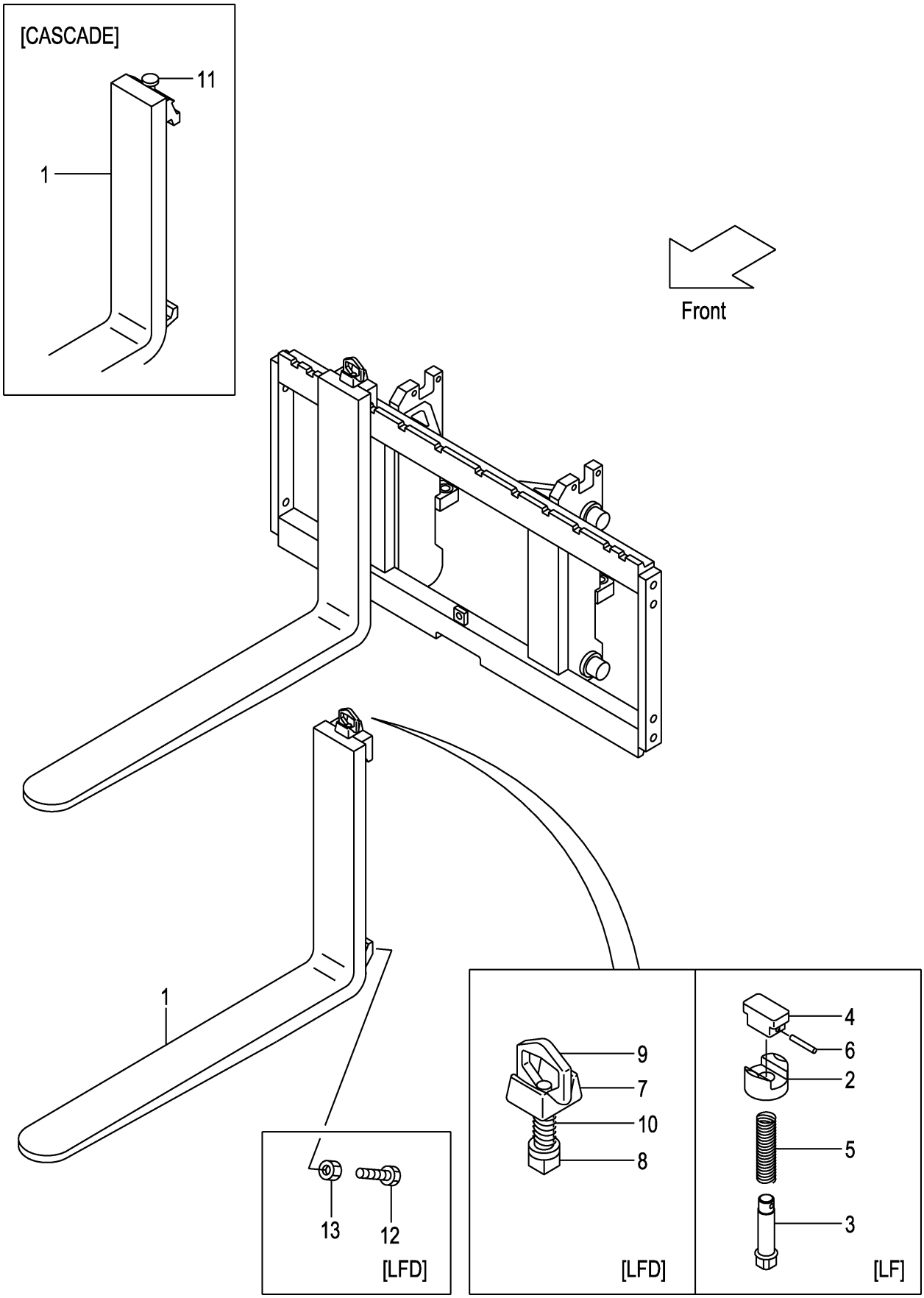

A:VMOA7(1.0T)
B:VMOA7(1.5T)
C:VMOA9(1.8T)

FIG.185
(M7018110)

Item No	Part No.	Mark	Description		Req'd	Remarks : Serial No.
-	216G8-10351		FORK	ﾌｫｰｸ	2	[LFD152] INC.7-10
-	216G8-10441		FORK	ﾌｫｰｸ	2	[LFD160] INC.7-10
-	216G8-10361		FORK	ﾌｫｰｸ	2	B,C [LFD167] INC.7-10
-	20A78-10511		FORK	ﾌｫｰｸ	2	B,C [LF092/CASCADE] INC.11
-	20A78-10511		FORK	ﾌｫｰｸ	2	[EX/LF092/CASCADE] INC.11
-	20A78-10521		FORK	ﾌｫｰｸ	2	[LF107/CASCADE] INC.11
-	20A78-10531		FORK	ﾌｫｰｸ	2	[LF122/CASCADE] INC.11
2	216G8-12921		HANDLE	ﾊﾝﾄﾞﾙ	2	[LF]
3	231A8-12001		PIN	ﾋﾟﾝ	2	[LF]
4	231A8-12011		KNOB	ﾉﾌﾞ	2	[LF]
5	231A8-12021		SPRING	ｽﾌﾟﾘﾝｸﾞ	2	[LF]
6	231A8-12031		PIN,SPRING	ﾋﾟﾝ	2	[LF]
A1	214A8-11001		STOPPER-ASSY,FORK	ﾌｫｰｸｽﾄｯﾊﾟｱｯｾﾝ	2	[LFD] INC.7-10
7	214A8-12001		HEAD	ﾍｯﾄﾞ	2	[LFD]
8	214A8-12011		STOPPER	ｽﾄｯﾊﾟ	2	[LFD]
9	214A8-12021		HANDLE	ﾊﾝﾄﾞﾙ	2	[LFD]
10	214A8-12031		SPRING	ｽﾌﾟﾘﾝｸﾞ	2	[LFD]
11	W-K2PK-M		PIN,STOPPER	ﾋﾟﾝ	2	[CASCADE]
12	216G8-12101		BOLT	ﾎﾞﾙﾄ	4	[LFD]
13	01402-00010		NUT	ﾅｯﾄ	4	[LFD]

FIG.186 LIFT BRACKET [VM0A7,VM0A9]

(M7018210) ﾘﾌﾄﾌﾞﾗｹｯﾄ

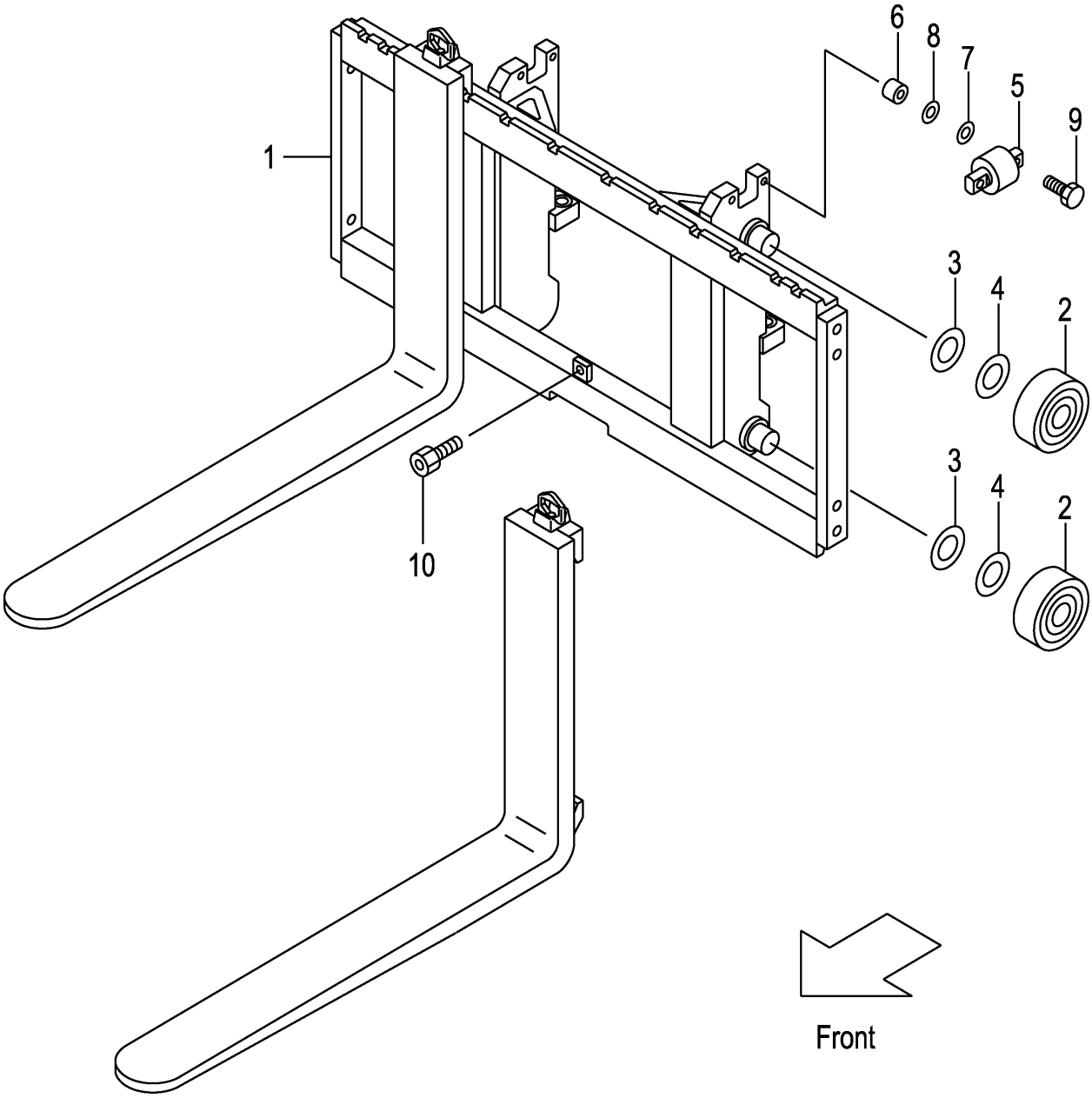

A:VMOA7(1.0T)
B:VMOA7(1.5T)
C:VMOA9(1.8T)

FIG.186
(M7018210)

Item No	Part No.	Mark	Description		Req'd	Remarks : Serial No.
1	20A78-20201		BRACKET,LIFT	ﾌﾞﾗｹｯﾄ	1	A,B
-	20A98-20201		BRACKET,LIFT	ﾌﾞﾗｹｯﾄ	1	C
-	50A71-61001		BRACKET,LIFT	ﾌﾞﾗｹｯﾄ	1	[WF102][WF110][WF114][WF127]
-	50A71-61011		BRACKET,LIFT	ﾌﾞﾗｹｯﾄ	1	[WF135][WF138][WF146][WF150] [WF154]
-	50A77-31001		BRACKET,LIFT	ﾌﾞﾗｹｯﾄ	1	[TRB][TRV][TC]
-	50A71-61101		BRACKET,LIFT	ﾌﾞﾗｹｯﾄ	1	[TRB/WF110]
-	50A71-61111		BRACKET,LIFT	ﾌﾞﾗｹｯﾄ	1	[TRB/WF135]
2	211F8-22201		ROLLER,END,102.0	ﾛｰﾗ	4	
-	211F8-22211		ROLLER,END,102.5	ﾛｰﾗ	(4)	
-	511F3-74021		ROLLER,END,102.0	ﾛｰﾗ	4	[FC][FCS35][FCS55][CS35][CSA] [FCS45]
-	511F3-74031		ROLLER,END,102.5	ﾛｰﾗ	(4)	[FC][FCS35][FCS55][CS35][CSA] [FCS45]
3	211F8-22261		SHIM,T-0.5	ｼﾑ	4	
4	211F8-22271		SHIM,T-1.0	ｼﾑ	8	
5	22018-30304		ROLLER,SIDE,41.0	ﾛｰﾗ	2	
-	510F3-74002		ROLLER,SIDE,41.0	ﾛｰﾗ	2	[FC][FCS35][FCS55][CS35][CSA] [FCS45]
6	22578-32841		SPACER	ｽﾍﾟｰｻ	4	
7	22018-30261		SHIM,T-0.2	ｼﾑ	8	
8	22018-30121		SHIM,T-1.0	ｼﾑ	4	
9	01103-10045		BOLT & WASHER	ﾎﾞﾙﾄ&ﾜｯｼｬ	4	
10	01184-12025		BOLT & WASHER	ﾎﾞﾙﾄ&ﾜｯｼｬ	1	

FIG.187 BACKREST [VM0A7,VM0A9]

(M7018220) ﾊﾞｯｸﾚｽﾄ

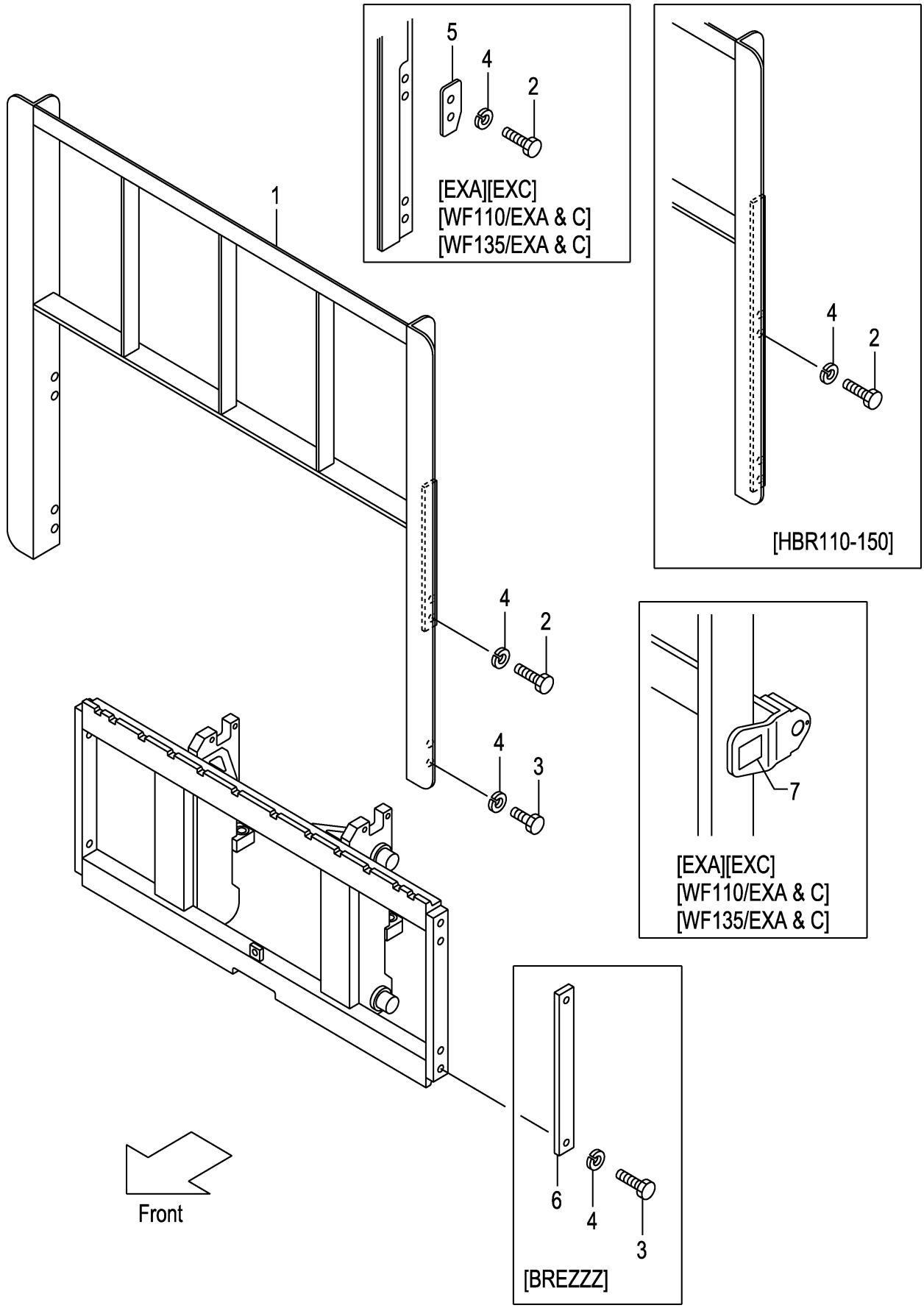

A:VMOA7(1.0T)
B:VMOA7(1.5T)
C:VMOA9(1.8T)

FIG.187
(M7018220)

Item No	Part No.	Mark	Description		Req'd	Remarks : Serial No.
1	216G8-22201		BACKREST	ﾊﾞｯｸﾚｽﾄ	1	
-	516G2-74301		BACKREST	ﾊﾞｯｸﾚｽﾄ	1	[EXA][EXC]
-	216G8-22301		BACKREST	ﾊﾞｯｸﾚｽﾄ	1	[HBR110]
-	216G8-22311		BACKREST	ﾊﾞｯｸﾚｽﾄ	1	[HBR120]
-	216G8-22321		BACKREST	ﾊﾞｯｸﾚｽﾄ	1	[HBR130]
-	216G8-22331		BACKREST	ﾊﾞｯｸﾚｽﾄ	1	[HBR140]
-	216G8-22341		BACKREST	ﾊﾞｯｸﾚｽﾄ	1	[HBR150]
-	516G1-64301		BACKREST	ﾊﾞｯｸﾚｽﾄ	1	[WF110]
-	516G1-64351		BACKREST	ﾊﾞｯｸﾚｽﾄ	1	[WF135]
-	516G2-74101		BACKREST	ﾊﾞｯｸﾚｽﾄ	1	[WF110/EXA][WF110/EXC]
-	516G2-74201		BACKREST	ﾊﾞｯｸﾚｽﾄ	1	[WF135/EXA][WF135/EXC]
2	01100-14030		BOLT	ﾎﾞﾙﾄ	4	(WITHOUT BREZZZ)
-	01100-14035		BOLT	ﾎﾞﾙﾄ	4	[EXA][EXC][WF110/EXA&C] [WF135/EXA&C]
-	01100-14030		BOLT	ﾎﾞﾙﾄ	8	[HBR110-150]
3	01100-14025		BOLT	ﾎﾞﾙﾄ	4	(WITHOUT HBR110-150)
4	02010-00014		WASHER	ﾜｯｼｬ	8	
-	02010-00014		WASHER	ﾜｯｼｬ	4	[BREZZZ]
5	534A2-74051		PLATE,STOPPER	ﾌﾟﾚｰﾄ	2	[EXA][EXC][WF110/EXA&C] [WF135/EXA&C]
6	23659-42161		PLATE	ﾌﾟﾚｰﾄ	2	[BREZZZ]
7	534A2-74301		DECAL,CAUTION	ﾃﾞｶﾙ	1	[EXA][EXC][WF110/EXA&C] [WF135/EXA&C]

FIG.188 MAST [VM0A7,VM0A9]

(M7018310) マスト

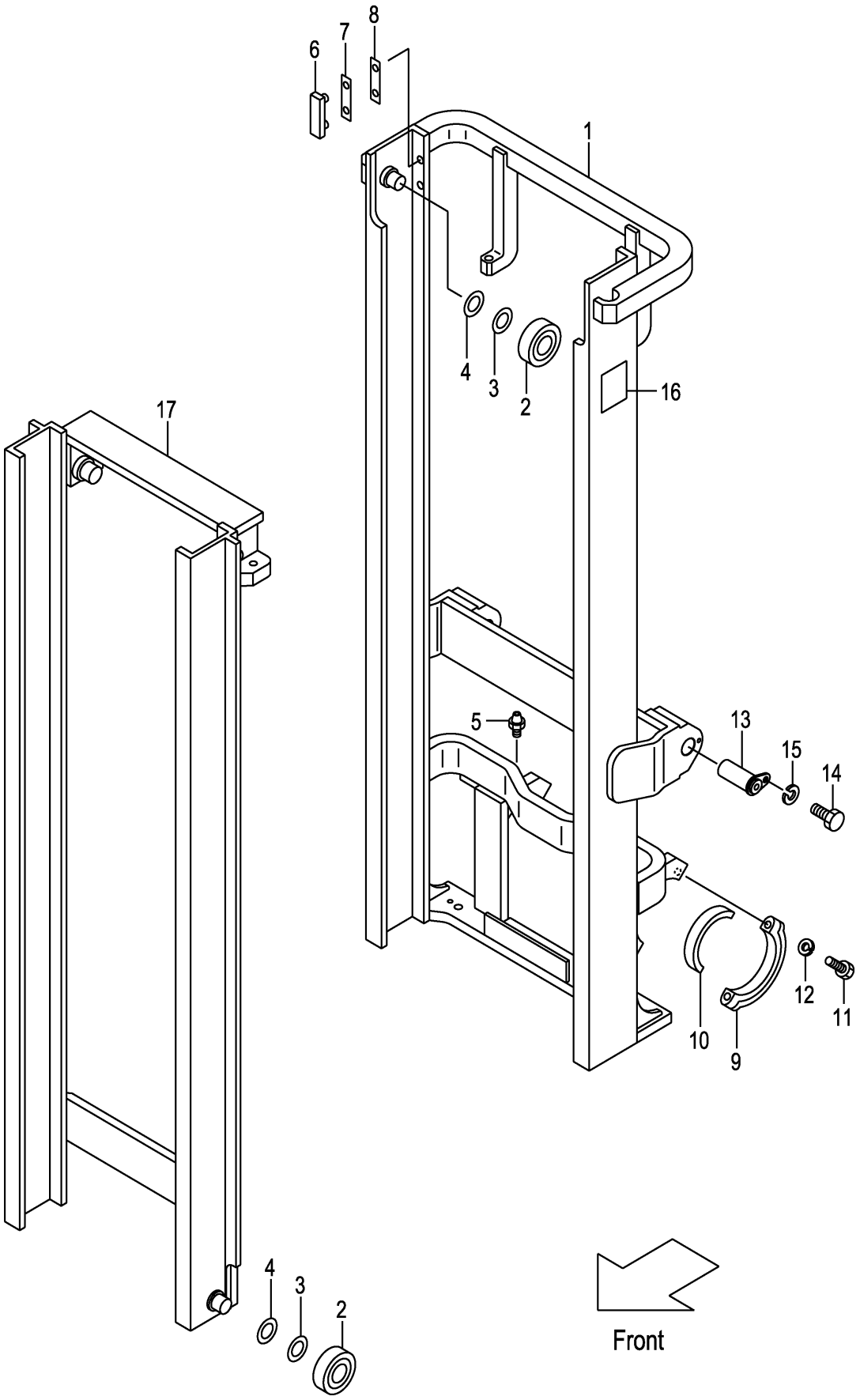

A:VMOA7(1.0T)
B:VMOA7(1.5T)
C:VMOA9(1.8T)

FIG.188
(M7018310)

Item No	Part No.	Mark	Description		Req'd	Remarks : Serial No.
1	20A78-30211		MAST,OUTER VM200	ﾏｽﾄ	1	
-	20A78-30221		MAST,OUTER VM225	ﾏｽﾄ	1	
-	20A78-30231		MAST,OUTER VM250	ﾏｽﾄ	1	
-	20A78-30241		MAST,OUTER VM270	ﾏｽﾄ	1	
-	20A78-30251		MAST,OUTER VM275	ﾏｽﾄ	1	
-	20A78-30201		MAST,OUTER VM300	ﾏｽﾄ	1	
-	20A78-30261		MAST,OUTER VM325	ﾏｽﾄ	1	
-	20A78-30271		MAST,OUTER VM330	ﾏｽﾄ	1	
-	20A78-30281		MAST,OUTER VM350	ﾏｽﾄ	1	
-	20A78-30291		MAST,OUTER VM366	ﾏｽﾄ	1	
-	20A78-30301		MAST,OUTER VM370	ﾏｽﾄ	1	
-	20A78-30311		MAST,OUTER VM375	ﾏｽﾄ	1	
-	20A78-30321		MAST,OUTER VM400	ﾏｽﾄ	1	
-	20A78-30331		MAST,OUTER VM425	ﾏｽﾄ	1	
-	20A78-30341		MAST,OUTER VM450	ﾏｽﾄ	1	
-	20A78-30351		MAST,OUTER VM475	ﾏｽﾄ	1	
-	20A78-30361		MAST,OUTER VM500	ﾏｽﾄ	1	
-	20A78-30371		MAST,OUTER VM550	ﾏｽﾄ	1	
-	20A78-30381		MAST,OUTER VM600	ﾏｽﾄ	1	
2	211F8-22221		ROLLER,END,102.0	ﾛｰﾗ	4	
-	211F8-22231		ROLLER,END,102.5	ﾛｰﾗ	(4)	
-	511F3-74021		ROLLER,END,102.0	ﾛｰﾗ	4	[FC][FCS35][FCS55][CS35][CSA][FCS45]
-	511F3-74031		ROLLER,END,102.5	ﾛｰﾗ	(4)	[FC][FCS35][FCS55][CS35][CSA][FCS45]
3	211F8-22261		SHIM,T-0.5	ｼﾑ	4	[FC][FCS35][FCS55][CS35][CSA][FCS45]
-	211F8-22261		SHIM,T-0.5	ｼﾑ	8	
-	211F8-22261		SHIM,T-0.5	ｼﾑ	4	[FCS35][FCS55][CS35][FCS45]
4	211F8-22271		SHIM,T-1.0	ｼﾑ	8	[FC][FCS35][FCS55][CS35][CSA][FCS45]
-	211F8-22271		SHIM,T-1.0	ｼﾑ	16	
-	211F8-22271		SHIM,T-1.0	ｼﾑ	8	[FCS35][FCS55][CS35][FCS45]
5	04901-00100		FITTING	ﾌｨｯﾃｨﾝｸﾞ	2	
6	216G8-33401		SLIPPER	ｽﾘｯﾊﾟ	2	
7	216G8-33361		SHIM,T-0.5	ｼﾑ	8	
8	216G8-33371		SHIM,T-1.0	ｼﾑ	4	
9	210F6-12441		CAP	ｷｬｯﾌﾟ	2	
10	216G8-02001		BUSHING	ﾌﾞｯｼﾝｸﾞ	2	
11	01103-14065		BOLT	ﾎﾞﾙﾄ	4	
12	02010-00014		WASHER	ﾜｯｼｬ	4	
13	272K8-52201		PIN	ﾋﾟﾝ	2	
14	216G8-52301		BOLT	ﾎﾞﾙﾄ	2	
15	02010-20012		WASHER	ﾜｯｼｬ	2	
16	23678-06002		PLATE,NAME	ﾌﾟﾚｰﾄ	1	
17	218G8-30411		MAST,INNER VM200	ﾏｽﾄ	1	
-	218G8-30421		MAST,INNER VM225	ﾏｽﾄ	1	
-	218G8-30431		MAST,INNER VM250	ﾏｽﾄ	1	
-	218G8-30441		MAST,INNER VM270	ﾏｽﾄ	1	
-	218G8-30451		MAST,INNER VM275	ﾏｽﾄ	1	

FIG.188 MAST [VM0A7,VM0A9]

(M7018310) マスト

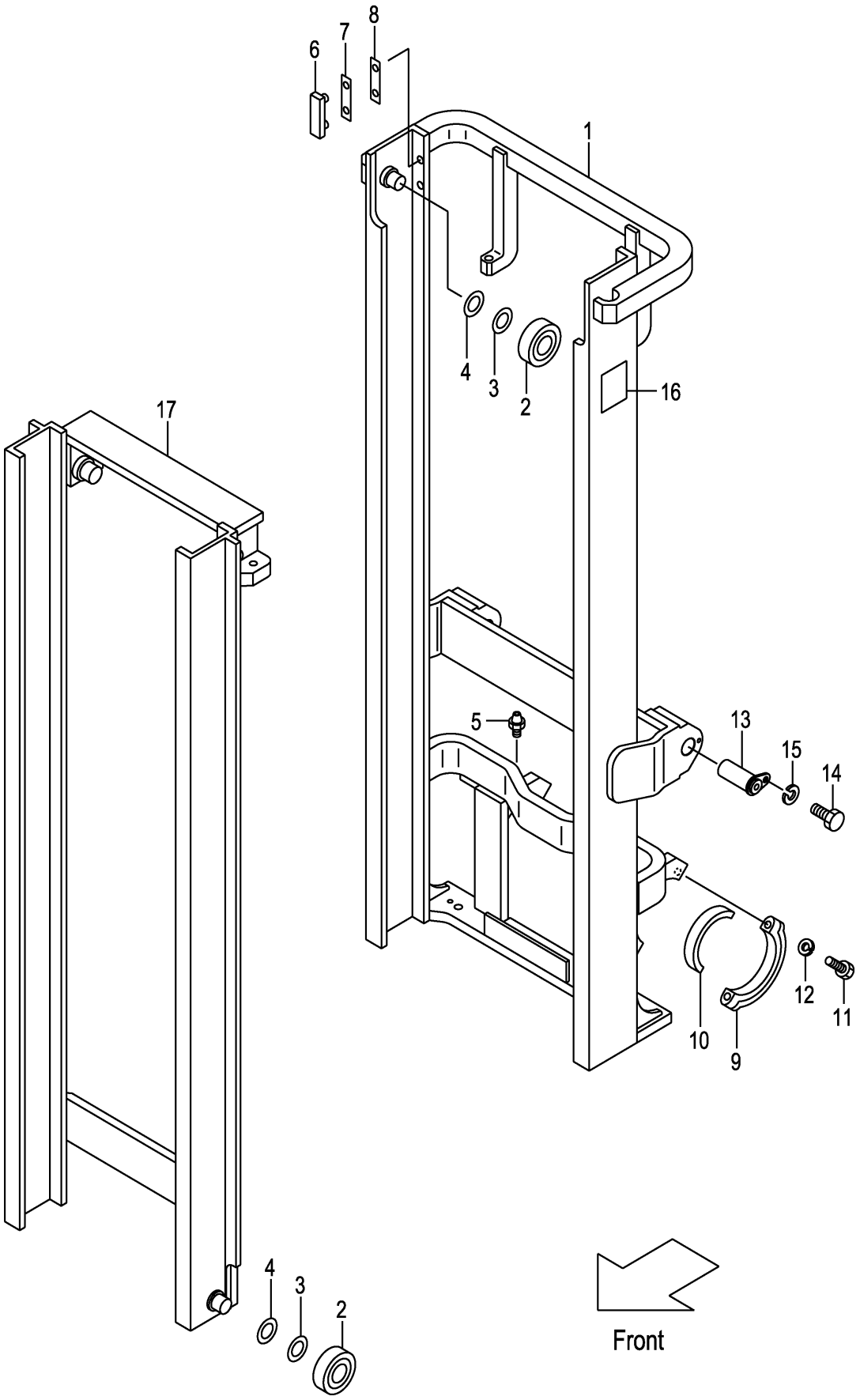

A:VMOA7(1.0T)
B:VMOA7(1.5T)
C:VMOA9(1.8T)

FIG.188
(M7018310)

Item No	Part No.	Mark	Description	Req'd	Remarks : Serial No.
-	218G8-30401		MAST,INNER VM300 マスト	1	
-	218G8-30461		MAST,INNER VM325 マスト	1	
-	218G8-30471		MAST,INNER VM330 マスト	1	
-	218G8-30481		MAST,INNER VM350 マスト	1	
-	218G8-30491		MAST,INNER VM366 マスト	1	
-	218G8-30501		MAST,INNER VM370 マスト	1	
-	218G8-30511		MAST,INNER VM375 マスト	1	
-	218G8-30521		MAST,INNER VM400 マスト	1	
-	218G8-30531		MAST,INNER VM425 マスト	1	
-	218G8-30541		MAST,INNER VM450 マスト	1	
-	218G8-30551		MAST,INNER VM475 マスト	1	
-	218G8-30561		MAST,INNER VM500 マスト	1	
-	218G8-30571		MAST,INNER VM550 マスト	1	
-	218G8-30581		MAST,INNER VM600 マスト	1	
18	229F6-42211	+	SEAL シール	4	

FIG.189 TILT GAUGE [VM0A7,VM0A9/(TG,PPC,PR,PRX,PLR)]

(M7018320) ﾃｨﾙﾄｹﾞｰｼﾞ

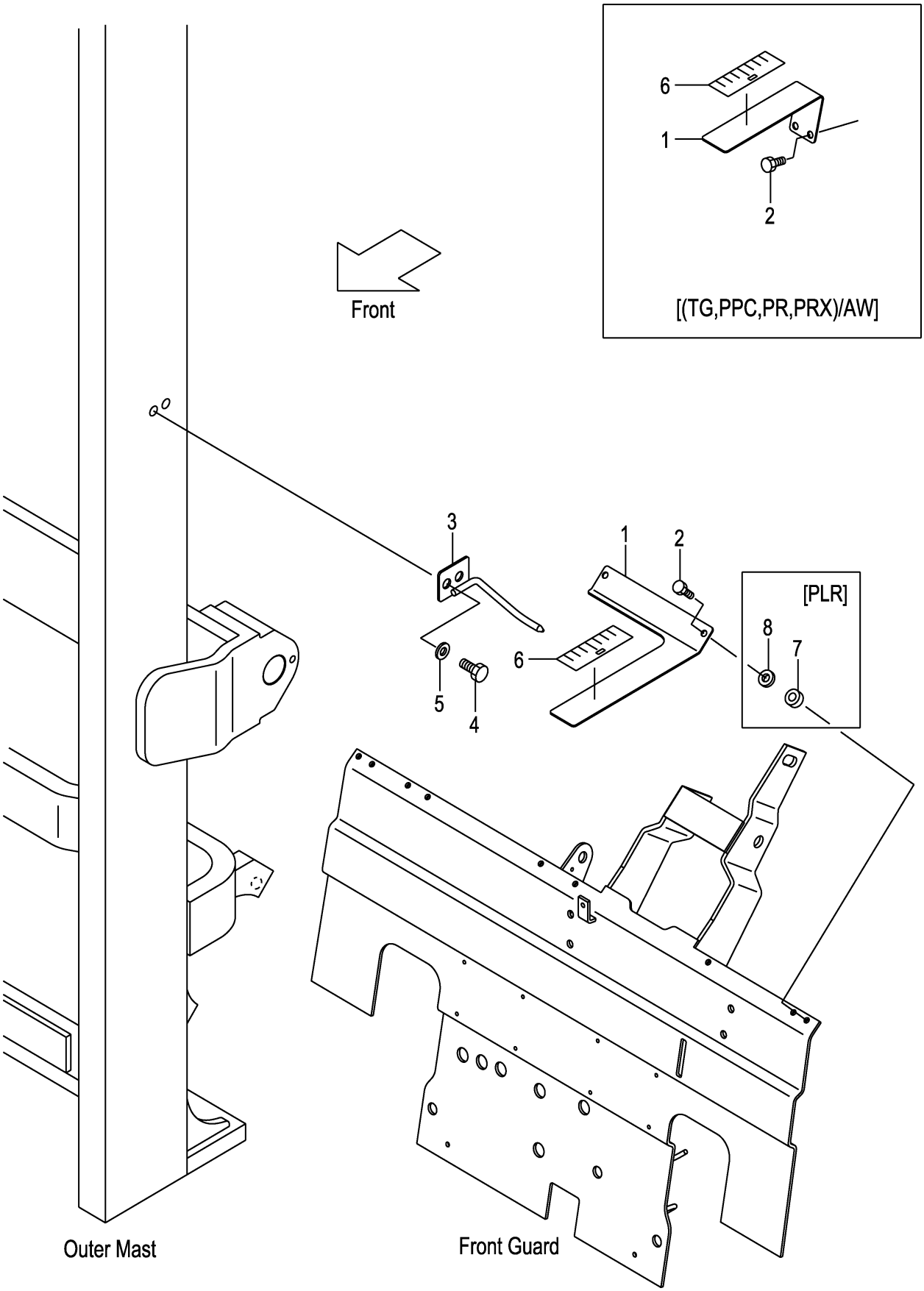

A:VMOA7(1.0T)
B:VMOA7(1.5T)
C:VMOA9(1.8T)

FIG.189
(M7018320)

Item No	Part No.	Mark	Description		Req'd	Remarks : Serial No.
1	62A89-21811		GAUGE,TILT	ｹﾞｰｼﾞ	1	[VM250-600/ (TG,PLR,PPC,PRX,PR)]
-	62A89-21831		GAUGE,TILT	ｹﾞｰｼﾞ	1	[VM250-600/AW/ (TG,PR,PPC,PRX)]
2	01183-06020		BOLT	ﾎﾞﾙﾄ	2	[VM250-600/(TG,PPC,PRX,PR)]
-	01030-06025		SCREW	ｽｸﾘｭ	2	[VM250-600/PLR]
-	01183-06020		BOLT	ﾎﾞﾙﾄ	2	[VM250-600/AW/ (TG,PR,PPC,PRX)]
3	617B9-21851		INDICATOR	ｲﾝｼﾞｹｰﾀ	1	[VM250-600/ (TG,PLR,PPC,PRX,PR)]
-	62A89-21851		INDICATOR	ｲﾝｼﾞｹｰﾀ	1	[VM250-600/AW/ (TG,PR,PPC,PRX)]
4	01184-12025		BOLT	ﾎﾞﾙﾄ	2	[VM250-600/ (TG,PLR,PPC,PRX,PR)]
-	01184-12025		BOLT	ﾎﾞﾙﾄ	2	[VM250-600/AW/ (TG,PR,PPC,PRX)]
5	02000-00012		WASHER	ﾜｯｼｬ	2	[VM250-600/ (TG,PLR,PPC,PRX,PR)]
-	02000-00012		WASHER	ﾜｯｼｬ	2	[VM250-600/AW/ (TG,PR,PPC,PRX)]
6	62459-23371		SEAL,GAUGE	ｼｰﾙ	1	[VM250-600/ (TG,PLR,PPC,PRX,PR)]
-	62459-23371		SEAL,GAUGE	ｼｰﾙ	1	[VM250-600/AW/ (TG,PR,PPC,PRX)]
7	62156-52341		SPACER	ｽﾍﾟｰｻ	2	[VM250-600/PLR]
8	02000-00006		WASHER	ﾜｯｼｬ	2	[VM250-600/PLR]

FIG.190 LIFT CYLINDER [VM0A7,VM0A9]

(M7018410) リフトシリンダ

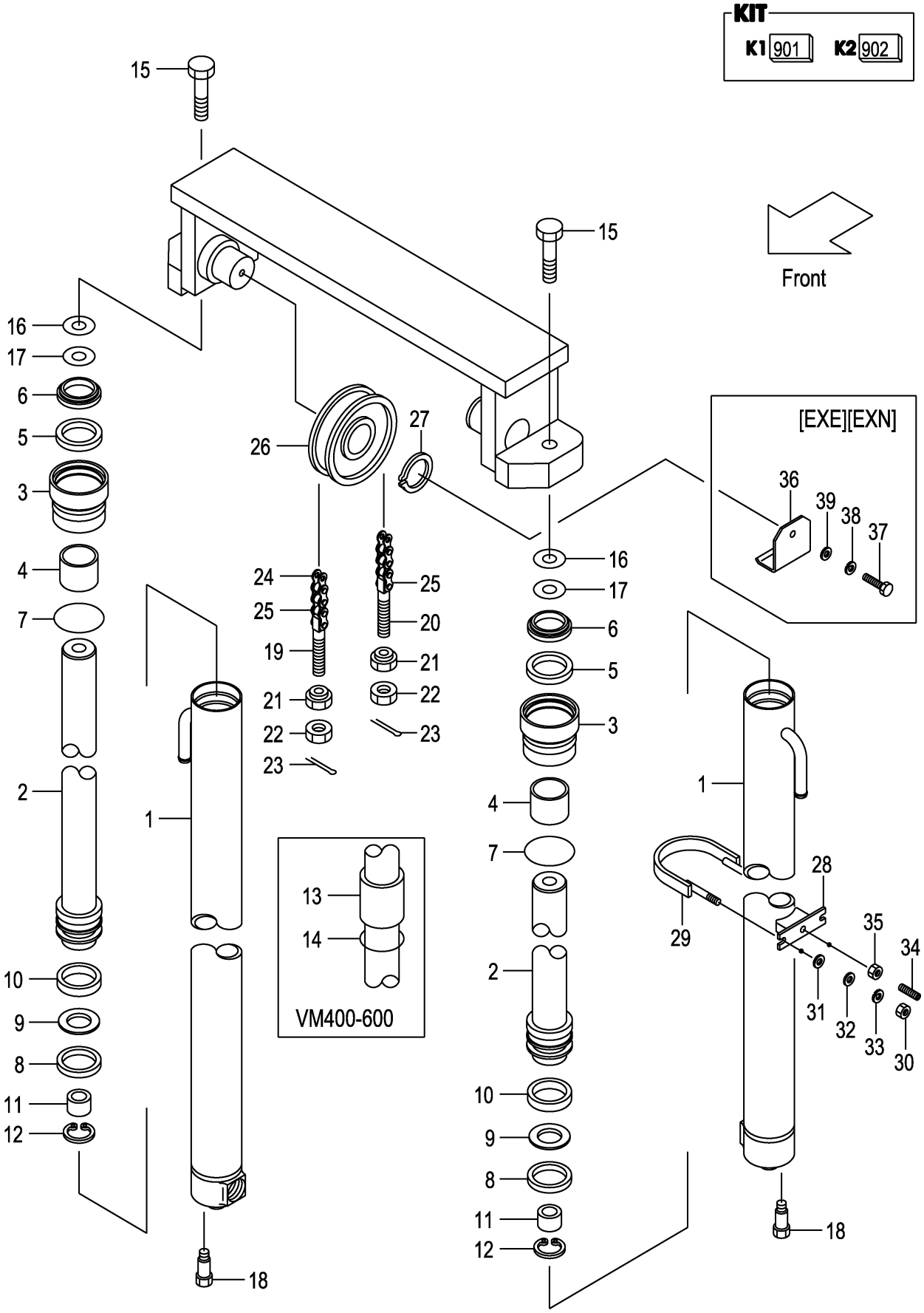

A:VMOA7(1.0T)
B:VMOA7(1.5T)
C:VMOA9(1.8T)

FIG.190
(M7018410)

Item No	Part No.	Mark	Description		Req'd	Remarks : Serial No.
A1	20A78-40211		CYL-ASSY,LIFT VM200	ﾘﾌﾄｼﾘﾝﾀﾞｱｯｾﾝ	2	INC.1-12
-	20A78-40221		CYL-ASSY,LIFT VM225	ﾘﾌﾄｼﾘﾝﾀﾞｱｯｾﾝ	2	INC.1-12
-	20A78-40231		CYL-ASSY,LIFT VM250	ﾘﾌﾄｼﾘﾝﾀﾞｱｯｾﾝ	2	INC.1-12
-	20A78-40241		CYL-ASSY,LIFT VM270	ﾘﾌﾄｼﾘﾝﾀﾞｱｯｾﾝ	2	INC.1-12
-	20A78-40251		CYL-ASSY,LIFT VM275	ﾘﾌﾄｼﾘﾝﾀﾞｱｯｾﾝ	2	INC.1-12
-	20A78-40201		CYL-ASSY,LIFT VM300	ﾘﾌﾄｼﾘﾝﾀﾞｱｯｾﾝ	2	INC.1-12
-	20A78-40261		CYL-ASSY,LIFT VM325	ﾘﾌﾄｼﾘﾝﾀﾞｱｯｾﾝ	2	INC.1-12
-	20A78-40271		CYL-ASSY,LIFT VM330	ﾘﾌﾄｼﾘﾝﾀﾞｱｯｾﾝ	2	INC.1-12
-	20A78-40281		CYL-ASSY,LIFT VM350	ﾘﾌﾄｼﾘﾝﾀﾞｱｯｾﾝ	2	INC.1-12
-	20A78-40291		CYL-ASSY,LIFT VM366	ﾘﾌﾄｼﾘﾝﾀﾞｱｯｾﾝ	2	INC.1-12
-	20A78-40301		CYL-ASSY,LIFT VM370	ﾘﾌﾄｼﾘﾝﾀﾞｱｯｾﾝ	2	INC.1-12
-	20A78-40311		CYL-ASSY,LIFT VM375	ﾘﾌﾄｼﾘﾝﾀﾞｱｯｾﾝ	2	INC.1-12
-	20A78-40321		CYL-ASSY,LIFT VM400	ﾘﾌﾄｼﾘﾝﾀﾞｱｯｾﾝ	2	INC.1-14
-	20A78-40331		CYL-ASSY,LIFT VM425	ﾘﾌﾄｼﾘﾝﾀﾞｱｯｾﾝ	2	INC.1-14
-	20A78-40341		CYL-ASSY,LIFT VM450	ﾘﾌﾄｼﾘﾝﾀﾞｱｯｾﾝ	2	INC.1-14
-	20A78-40351		CYL-ASSY,LIFT VM475	ﾘﾌﾄｼﾘﾝﾀﾞｱｯｾﾝ	2	INC.1-14
-	20A78-40361		CYL-ASSY,LIFT VM500	ﾘﾌﾄｼﾘﾝﾀﾞｱｯｾﾝ	2	INC.1-14
-	20A78-40371		CYL-ASSY,LIFT VM550	ﾘﾌﾄｼﾘﾝﾀﾞｱｯｾﾝ	2	INC.1-14
-	20A78-40381		CYL-ASSY,LIFT VM600	ﾘﾌﾄｼﾘﾝﾀﾞｱｯｾﾝ	2	INC.1-14
901	B-3045A-00020	K1	KIT,REPAIR	ﾘﾍﾟｱｷｯﾄ	2	INC.5-9
902	B-3045B-00026	K2	KIT,HEAD	ﾍｯﾄﾞｷｯﾄ	2	INC.3,4
1	B-B6567-32601		BODY,CYL VM200	ﾎﾞﾃﾞｨ	2	
-	B-B6567-32701		BODY,CYL VM225	ﾎﾞﾃﾞｨ	2	
-	B-B6567-32801		BODY,CYL VM250	ﾎﾞﾃﾞｨ	2	
-	B-B6567-32901		BODY,CYL VM270	ﾎﾞﾃﾞｨ	2	
-	B-B6567-33001		BODY,CYL VM275	ﾎﾞﾃﾞｨ	2	
-	B-B6567-33101		BODY,CYL VM300	ﾎﾞﾃﾞｨ	2	
-	B-B6567-33201		BODY,CYL VM325	ﾎﾞﾃﾞｨ	2	
-	B-B6567-33301		BODY,CYL VM330	ﾎﾞﾃﾞｨ	2	
-	B-B6567-33401		BODY,CYL VM350	ﾎﾞﾃﾞｨ	2	
-	B-B6567-33501		BODY,CYL VM366	ﾎﾞﾃﾞｨ	2	
-	B-B6567-33601		BODY,CYL VM370	ﾎﾞﾃﾞｨ	2	
-	B-B6567-33701		BODY,CYL VM375	ﾎﾞﾃﾞｨ	2	
-	B-B6567-33801		BODY,CYL VM400	ﾎﾞﾃﾞｨ	2	
-	B-B6567-33901		BODY,CYL VM425	ﾎﾞﾃﾞｨ	2	
-	B-B6567-34001		BODY,CYL VM450	ﾎﾞﾃﾞｨ	2	
-	B-B6567-34101		BODY,CYL VM475	ﾎﾞﾃﾞｨ	2	
-	B-B6567-34201		BODY,CYL VM500	ﾎﾞﾃﾞｨ	2	
-	B-B6567-34301		BODY,CYL VM550	ﾎﾞﾃﾞｨ	2	
-	B-B6567-34401		BODY,CYL VM600	ﾎﾞﾃﾞｨ	2	
2	B-B6567-32602		ROD,PISTON VM200	ﾛｯﾄﾞ	2	
-	B-B6567-32702		ROD,PISTON VM225	ﾛｯﾄﾞ	2	
-	B-B6567-32802		ROD,PISTON VM250	ﾛｯﾄﾞ	2	
-	B-B6567-32902		ROD,PISTON VM270	ﾛｯﾄﾞ	2	
-	B-B6567-33002		ROD,PISTON VM275	ﾛｯﾄﾞ	2	
-	B-B6567-33102		ROD,PISTON VM300	ﾛｯﾄﾞ	2	
-	B-B6567-33202		ROD,PISTON VM325	ﾛｯﾄﾞ	2	
-	B-B6567-33302		ROD,PISTON VM330	ﾛｯﾄﾞ	2	
-	B-B6567-33402		ROD,PISTON VM350	ﾛｯﾄﾞ	2	
-	B-B6567-33502		ROD,PISTON VM366	ﾛｯﾄﾞ	2	

FIG.190 LIFT CYLINDER [VM0A7,VM0A9]

(M7018410) リフトシリンダ

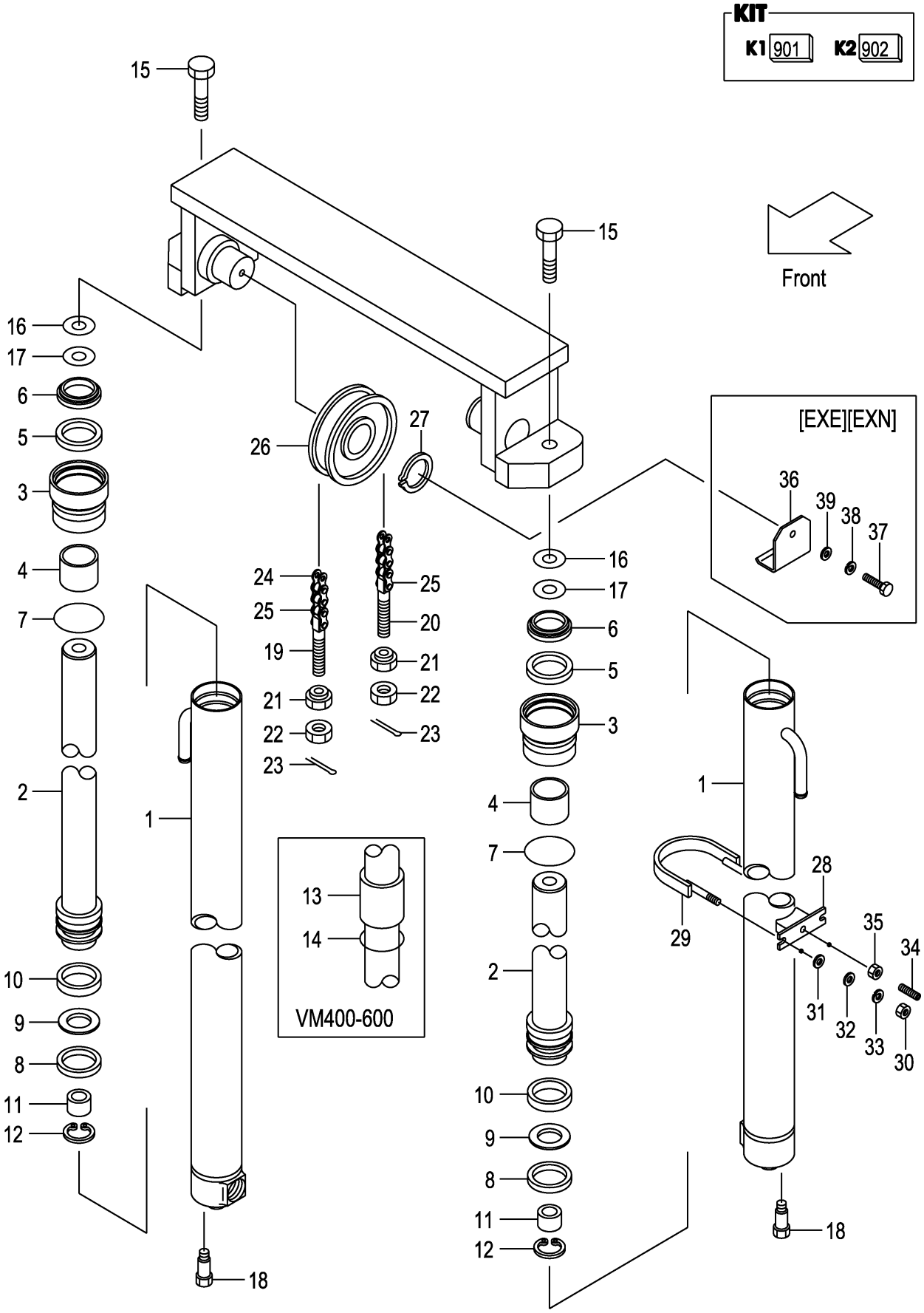

A:VMOA7(1.0T)
B:VMOA7(1.5T)
C:VMOA9(1.8T)

FIG.190
(M7018410)

Item No	Part No.	Mark	Description		Req'd	Remarks : Serial No.
-	B-B6567-33602		ROD,PISTON VM370	ﾛｯﾄﾞ	2	
-	B-B6567-33702		ROD,PISTON VM375	ﾛｯﾄﾞ	2	
-	B-B6567-33802		ROD,PISTON VM400	ﾛｯﾄﾞ	2	
-	B-B6567-33902		ROD,PISTON VM425	ﾛｯﾄﾞ	2	
-	B-B6567-34002		ROD,PISTON VM450	ﾛｯﾄﾞ	2	
-	B-B6567-34102		ROD,PISTON VM475	ﾛｯﾄﾞ	2	
-	B-B6567-34202		ROD,PISTON VM500	ﾛｯﾄﾞ	2	
-	B-B6567-34302		ROD,PISTON VM550	ﾛｯﾄﾞ	2	
-	B-B6567-34402		ROD,PISTON VM600	ﾛｯﾄﾞ	2	
3	NO PART NO.	#*	CAP	ｷｬｯﾌﾟ	2	
4	B-30131-35017	*	BUSHING	ﾌﾞｯｼﾝｸﾞ	2	
5	B-30961-03512	*	U-RING	Uﾘﾝｸﾞ	2	
6	B-30191-35025	*	RING,WIPER	ﾘﾝｸﾞ	2	
7	B-30161-91773	*	O-RING	Oﾘﾝｸﾞ	2	
8	B-30161-45046	*	U-RING	Uﾘﾝｸﾞ	2	
9	B-30461-45039	*	RING	ﾘﾝｸﾞ	2	
10	B-30131-45018		BUSHING	ﾌﾞｯｼﾝｸﾞ	2	
11	B-B6551-91008		RING,CUSHION	ﾘﾝｸﾞ	2	
12	B-30141-91049		RING,SNAP	ﾘﾝｸﾞ	2	
13	B-B6111-35039		SPACER VM400	ｽﾍﾟｰｻ	2	
-	B-B6111-35039		SPACER VM425	ｽﾍﾟｰｻ	2	
-	B-B6111-35039		SPACER VM450	ｽﾍﾟｰｻ	2	
-	B-B6111-35039		SPACER VM475	ｽﾍﾟｰｻ	2	
-	B-B6111-35039		SPACER VM500	ｽﾍﾟｰｻ	2	
-	B-B6111-35049		SPACER VM550	ｽﾍﾟｰｻ	2	
-	B-B6111-35049		SPACER VM600	ｽﾍﾟｰｻ	2	
14	B-95151-03500		O-RING	Oﾘﾝｸﾞ	2	
15	01103-12035		BOLT	ﾎﾞﾙﾄ	2	
16	22717-40081		SHIM,T-0.5	ｼﾑ	4	
17	22517-40051		SHIM,T-0.2	ｼﾑ	4	
18	216G8-43151		BOLT	ﾎﾞﾙﾄ	2	
19	218G8-42501		PIN,ANCHOR	ﾋﾟﾝ	2	
-	510F5-54051		PIN,ANCHOR	ﾋﾟﾝ	2	[FC][FCS35][FCS45][FCS55]
20	218G8-42511		PIN,ANCHOR	ﾋﾟﾝ	2	
-	510F5-54061		PIN,ANCHOR	ﾋﾟﾝ	2	[FC][FCS35][FCS45][FCS55]
21	22118-40181		NUT	ﾅｯﾄ	4	
-	22118-40181		NUT	ﾅｯﾄ	4	[FC][FCS35][FCS45][FCS55]
22	01400-00014		NUT	ﾅｯﾄ	4	
-	01400-00014		NUT	ﾅｯﾄ	4	[FC][FCS35][FCS45][FCS55]
23	02200-03030		PIN	ﾋﾟﾝ	4	
-	02200-03030		PIN	ﾋﾟﾝ	4	[FC][FCS35][FCS45][FCS55]
24	218G8-45811		CHAIN,LEAF VM200	ﾁｪｰﾝ	2	INC.25
-	218G8-45891		CHAIN,LEAF VM225	ﾁｪｰﾝ	2	INC.25
-	218G8-45971		CHAIN,LEAF VM250	ﾁｪｰﾝ	2	INC.25
-	218G8-46031		CHAIN,LEAF VM270	ﾁｪｰﾝ	2	INC.25
-	218G8-46051		CHAIN,LEAF VM275	ﾁｪｰﾝ	2	INC.25
-	218G8-46131		CHAIN,LEAF VM300	ﾁｪｰﾝ	2	INC.25
-	218G8-46211		CHAIN,LEAF VM325	ﾁｪｰﾝ	2	INC.25
-	218G8-46211		CHAIN,LEAF VM330	ﾁｪｰﾝ	2	INC.25
-	218G8-46271		CHAIN,LEAF VM350	ﾁｪｰﾝ	2	INC.25

FIG.190 LIFT CYLINDER [VM0A7,VM0A9]

(M7018410) リフトシリンダ

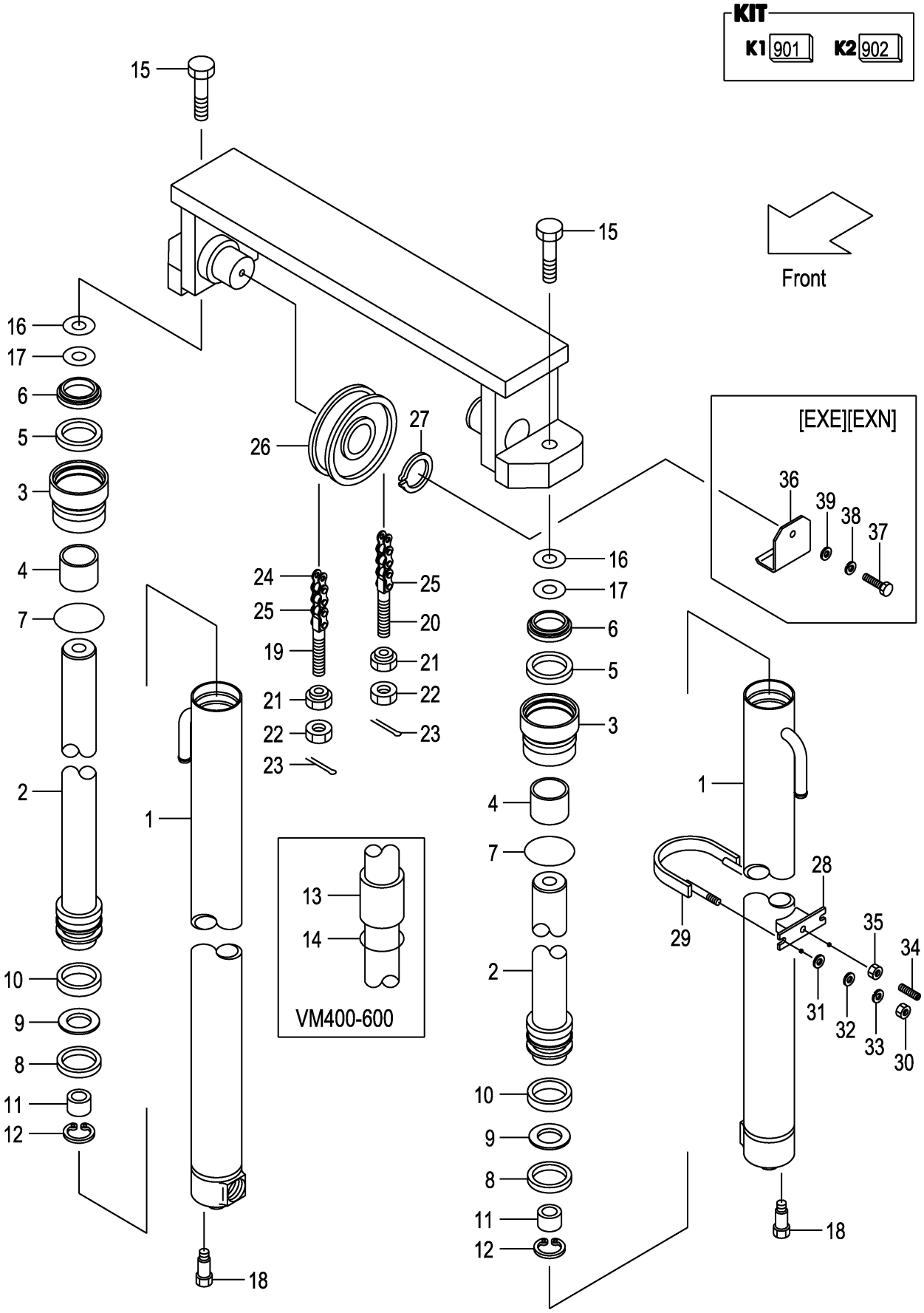

A:VMOA7(1.0T)
B:VMOA7(1.5T)
C:VMOA9(1.8T)

FIG.190
(M7018410)

Item No	Part No.	Mark	Description		Req'd	Remarks : Serial No.
-	218G8-46331		CHAIN,LEAF VM366	ﾁｪｰﾝ	2	INC.25
-	218G8-46351		CHAIN,LEAF VM370	ﾁｪｰﾝ	2	INC.25
-	218G8-46351		CHAIN,LEAF VM375	ﾁｪｰﾝ	2	INC.25
-	218G8-46471		CHAIN,LEAF VM400	ﾁｪｰﾝ	2	INC.25
-	218G8-46551		CHAIN,LEAF VM425	ﾁｪｰﾝ	2	INC.25
-	218G8-46631		CHAIN,LEAF VM450	ﾁｪｰﾝ	2	INC.25
-	218G8-46711		CHAIN,LEAF VM475	ﾁｪｰﾝ	2	INC.25
-	218G8-46791		CHAIN,LEAF VM500	ﾁｪｰﾝ	2	INC.25
-	218G8-46971		CHAIN,LEAF VM550	ﾁｪｰﾝ	2	INC.25
-	218G8-47131		CHAIN,LEAF VM600	ﾁｪｰﾝ	2	INC.25
-	09001-08051		CHAIN,ROLLER VM200	ﾁｪｰﾝ	2	[FC][FCS35][FCS45][FCS55]
-	09001-08055		CHAIN,ROLLER VM225	ﾁｪｰﾝ	2	[FC][FCS35][FCS45][FCS55]
-	09001-08061		CHAIN,ROLLER VM250	ﾁｪｰﾝ	2	[FC][FCS35][FCS45][FCS55]
-	09001-08065		CHAIN,ROLLER VM270	ﾁｪｰﾝ	2	[FC][FCS35][FCS45][FCS55]
-	09001-08065		CHAIN,ROLLER VM275	ﾁｪｰﾝ	2	[FC][FCS35][FCS45][FCS55]
-	09001-08071		CHAIN,ROLLER VM300	ﾁｪｰﾝ	2	[FC][FCS35][FCS45][FCS55]
-	09001-08075		CHAIN,ROLLER VM325	ﾁｪｰﾝ	2	[FC][FCS35][FCS45][FCS55]
-	09001-08077		CHAIN,ROLLER VM330	ﾁｪｰﾝ	2	[FC][FCS35][FCS45][FCS55]
-	09001-08081		CHAIN,ROLLER VM350	ﾁｪｰﾝ	2	[FC][FCS35][FCS45][FCS55]
-	09001-08083		CHAIN,ROLLER VM366	ﾁｪｰﾝ	2	[FC][FCS35][FCS45][FCS55]
-	09001-08085		CHAIN,ROLLER VM370	ﾁｪｰﾝ	2	[FC][FCS35][FCS45][FCS55]
-	09001-08085		CHAIN,ROLLER VM375	ﾁｪｰﾝ	2	[FC][FCS35][FCS45][FCS55]
-	09001-08093		CHAIN,ROLLER VM400	ﾁｪｰﾝ	2	[FC][FCS35][FCS45][FCS55]
-	09001-08097		CHAIN,ROLLER VM425	ﾁｪｰﾝ	2	[FC][FCS35][FCS45][FCS55]
-	09001-08103		CHAIN,ROLLER VM450	ﾁｪｰﾝ	2	[FC][FCS35][FCS45][FCS55]
-	09001-08107		CHAIN,ROLLER VM475	ﾁｪｰﾝ	2	[FC][FCS35][FCS45][FCS55]
-	09001-08113		CHAIN,ROLLER VM500	ﾁｪｰﾝ	2	[FC][FCS35][FCS45][FCS55]
-	09001-08123		CHAIN,ROLLER VM550	ﾁｪｰﾝ	2	[FC][FCS35][FCS45][FCS55]
-	09001-08133		CHAIN,ROLLER VM600	ﾁｪｰﾝ	2	[FC][FCS35][FCS45][FCS55]
25	218G8-42701		LINK	ﾘﾝｸ	4	
26	216G8-42031		SHEAVE	ｼｰﾌﾞ	2	
-	516G3-74001		SHEAVE	ｼｰﾌﾞ	2	[FC][FCS35][FCS45][FCS55]
27	02100-00035		RING,SNAP	ﾘﾝｸﾞ	2	
-	02100-00035		RING,SNAP	ﾘﾝｸﾞ	2	[FC][FCS35][FCS45][FCS55]
28	280B8-42031		SUPPORT	ｻﾎﾟｰﾄ	2	
29	280B8-42001		U-BOLT	Uﾎﾞﾙﾄ	2	
30	278R0-63151		NUT	ﾅｯﾄ	4	
31	02000-00010		WASHER	ﾜｯｼｬ	4	
32	02000-00008		WASHER	ﾜｯｼｬ	4	
33	02010-00008		WASHER	ﾜｯｼｬ	4	
34	215E8-42241		PLUG	ﾌﾟﾗｸﾞ	2	
35	234A8-42571		NUT	ﾅｯﾄ	2	
36	510F3-04021		COVER	ｶﾊﾞｰ	2	[EXE][EXN]
37	01100-16016		BOLT	ﾎﾞﾙﾄ	2	[EXE][EXN]
38	02010-00016		WASHER	ﾜｯｼｬ	2	[EXE][EXN]
39	02000-00016		WASHER	ﾜｯｼｬ	2	[EXE][EXN]

FIG.191 MAST PIPING [VM0A7,VM0A9]

(M7018420) マストパイピング

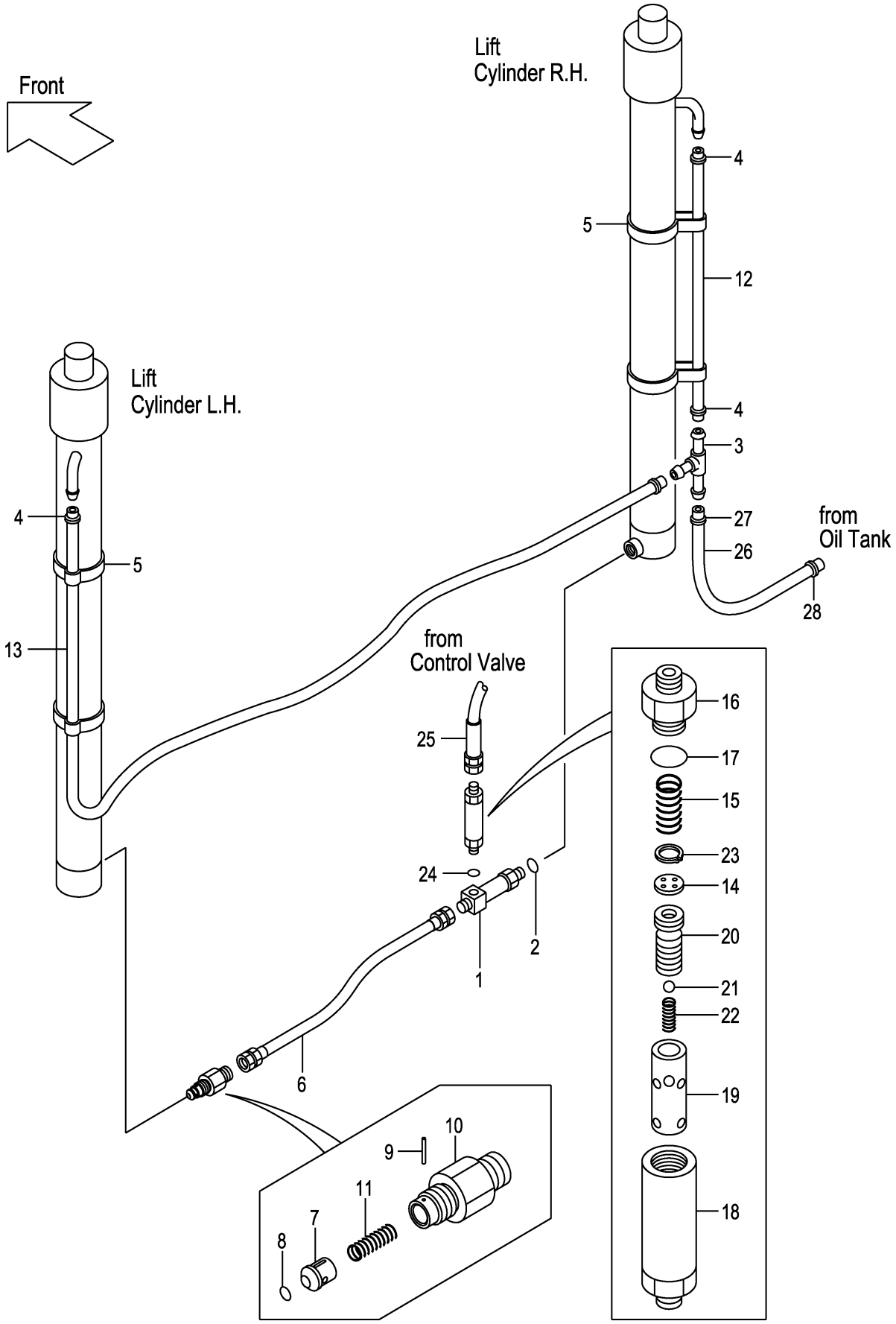

A:VMOA7(1.0T)
B:VMOA7(1.5T)
C:VMOA9(1.8T)

FIG.191
(M7018420)

Item No	Part No.	Mark	Description		Req'd	Remarks : Serial No.
A1	234A8-41101		THREE-WAY-ASSY	ｽﾘｰｳｪｲｱｯｾﾝ	1	INC.1,2
1	NO PART NO.	#	THREE-WAY	ｽﾘｰｳｴｲ	1	
2	03320-00140		O-RING	Oﾘﾝｸﾞ	1	
3	23679-45051		THREE-WAY	ｽﾘｰｳｴｲ	1	
-	53675-55051		THREE-WAY	ｽﾘｰｳｴｲ	1	A,B
						[FC][RTL]
4	04911-00018		CLIP	ｸﾘｯﾌﾟ	4	
-	24329-46201		CLIP	ｸﾘｯﾌﾟ	4	A,B
						[FC][RTL]
5	22N58-45001		BAND	ﾊﾞﾝﾄﾞ	4	
6	216G8-43501		HOSE	ﾎｰｽ	1	
A2	216G0-93201		VALVE-ASSY,CUT	ｶｯﾄﾊﾞﾙﾌﾞｱｯｾﾝ	1	INC.7-11
7	216G0-93212		PISTON	ﾋﾟｽﾄﾝ	1	
8	03320-00140		O-RING	Oﾘﾝｸﾞ	1	
9	02270-01014		PIN	ﾋﾟﾝ	1	
10	234A8-42622		NIPPLE	ﾆｯﾌﾟﾙ	1	
11	234A8-42611		SPRING	ｽﾌﾟﾘﾝｸﾞ	1	
12	23678-40075		HOSE VM200	ﾎｰｽ	1	
-	23678-40085		HOSE VM225	ﾎｰｽ	1	
-	23678-40100		HOSE VM250	ﾎｰｽ	1	
-	23678-40110		HOSE VM270	ﾎｰｽ	1	
-	23678-40110		HOSE VM275	ﾎｰｽ	1	
-	23678-40125		HOSE VM300	ﾎｰｽ	1	
-	23678-40135		HOSE VM325	ﾎｰｽ	1	
-	23678-40140		HOSE VM330	ﾎｰｽ	1	
-	23678-40150		HOSE VM350	ﾎｰｽ	1	
-	23678-40160		HOSE VM366	ﾎｰｽ	1	
-	23678-40160		HOSE VM375	ﾎｰｽ	1	
-	23678-40180		HOSE VM400	ﾎｰｽ	1	
-	23678-40190		HOSE VM425	ﾎｰｽ	1	
-	23678-40205		HOSE VM450	ﾎｰｽ	1	
-	23678-40215		HOSE VM475	ﾎｰｽ	1	
-	23678-40230		HOSE VM500	ﾎｰｽ	1	
-	23678-40260		HOSE VM550	ﾎｰｽ	1	
-	23678-40285		HOSE VM600	ﾎｰｽ	1	
-	04710-04075		HOSE VM200	ﾎｰｽ	1	A,B
						[FC][RTL]
-	04710-04085		HOSE VM225	ﾎｰｽ	1	A,B
						[FC][RTL]
-	04710-04100		HOSE VM250	ﾎｰｽ	1	A,B
						[FC][RTL]
-	04710-04110		HOSE VM270	ﾎｰｽ	1	A,B
						[FC][RTL]
-	04710-04110		HOSE VM275	ﾎｰｽ	1	A,B
						[FC][RTL]
-	04710-04125		HOSE VM300	ﾎｰｽ	1	A,B
						[FC][RTL]
-	04710-04135		HOSE VM325	ﾎｰｽ	1	A,B
						[FC][RTL]

FIG.191 MAST PIPING [VM0A7,VM0A9]

(M7018420) マストパイピング

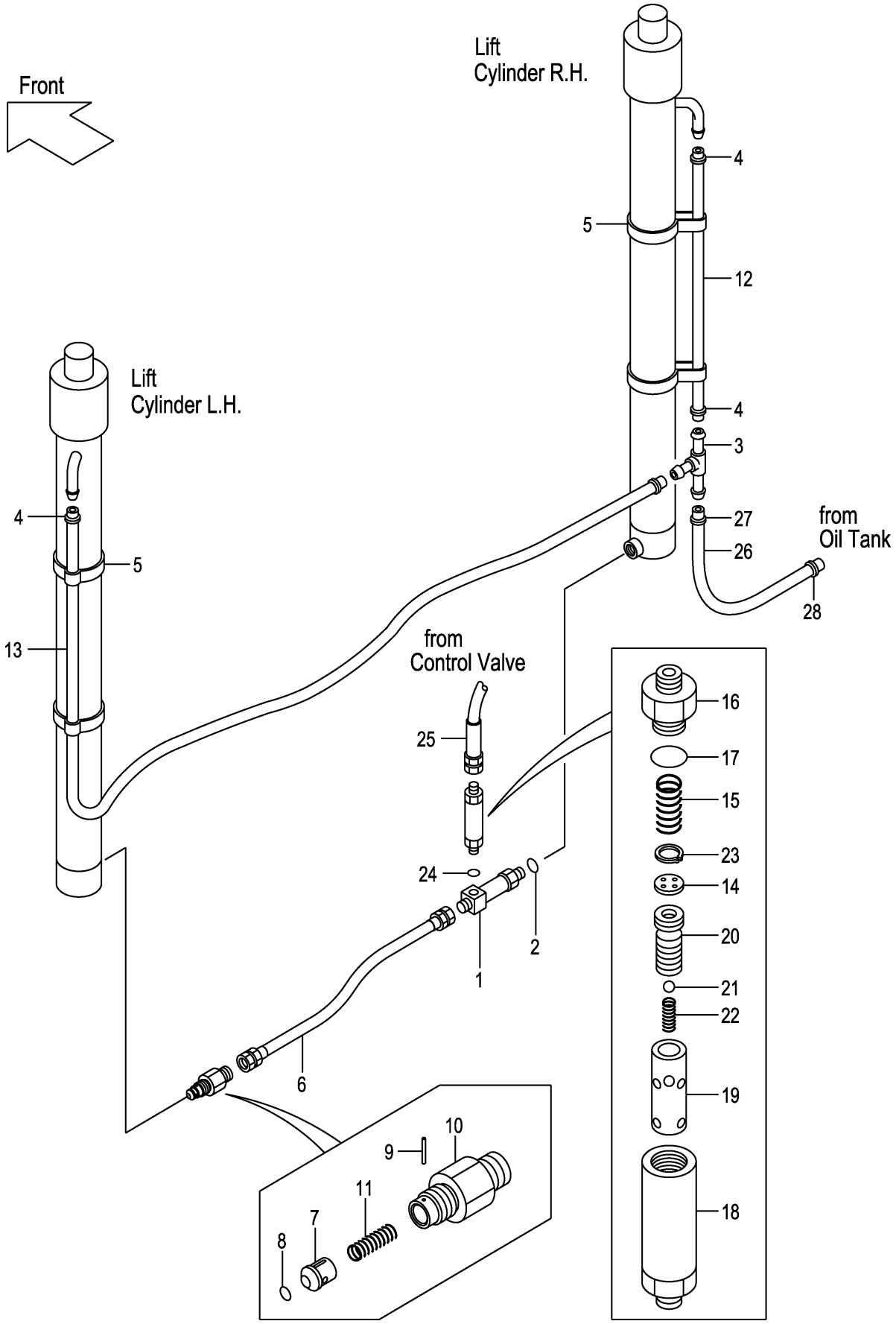

A:VMOA7(1.0T)
B:VMOA7(1.5T)
C:VMOA9(1.8T)

FIG.191
(M7018420)

Item No	Part No.	Mark	Description	Req'd	Remarks : Serial No.
-	04710-04140		HOSE VM330 ホース	1	A,B [FC][RTL]
-	04710-04150		HOSE VM350 ホース	1	A,B [FC][RTL]
-	04710-04160		HOSE VM366 ホース	1	A,B [FC][RTL]
-	04710-04160		HOSE VM370 ホース	1	A,B [FC][RTL]
-	04710-04160		HOSE VM375 ホース	1	A,B [FC][RTL]
-	04710-04180		HOSE VM400 ホース	1	A,B [FC][RTL]
-	04710-04190		HOSE VM425 ホース	1	A,B [FC][RTL]
-	04710-04205		HOSE VM450 ホース	1	A,B [FC][RTL]
-	04710-04215		HOSE VM475 ホース	1	A,B [FC][RTL]
-	04710-04230		HOSE VM500 ホース	1	A,B [FC][RTL]
-	04710-04260		HOSE VM550 ホース	1	A,B [FC][RTL]
-	04710-04285		HOSE VM600 ホース	1	A,B [FC][RTL]
13	23678-40130		HOSE VM200 ホース	1	
-	23678-40140		HOSE VM225 ホース	1	
-	23678-40155		HOSE VM250 ホース	1	
-	23678-40165		HOSE VM270 ホース	1	
-	23678-40165		HOSE VM275 ホース	1	
-	23678-40175		HOSE VM300 ホース	1	
-	23678-40190		HOSE VM325 ホース	1	
-	23678-40195		HOSE VM330 ホース	1	
-	23678-40205		HOSE VM350 ホース	1	
-	23678-40215		HOSE VM366 ホース	1	
-	23678-40215		HOSE VM370 ホース	1	
-	23678-40235		HOSE VM400 ホース	1	
-	23678-40245		HOSE VM425 ホース	1	
-	23678-40260		HOSE VM450 ホース	1	
-	23678-40270		HOSE VM475 ホース	1	
-	23678-40285		HOSE VM500 ホース	1	
-	23678-40315		HOSE VM550 ホース	1	
-	23678-40340		HOSE VM600 ホース	1	
-	04710-04130		HOSE VM200 ホース	1	A,B [FC][RTL]
-	04710-04140		HOSE VM225 ホース	1	A,B [FC][RTL]
-	04710-04155		HOSE VM250 ホース	1	A,B [FC][RTL]
-	04710-04165		HOSE VM270 ホース	1	A,B [FC][RTL]

FIG.191 MAST PIPING [VM0A7,VM0A9]

(M7018420) マストパイピング

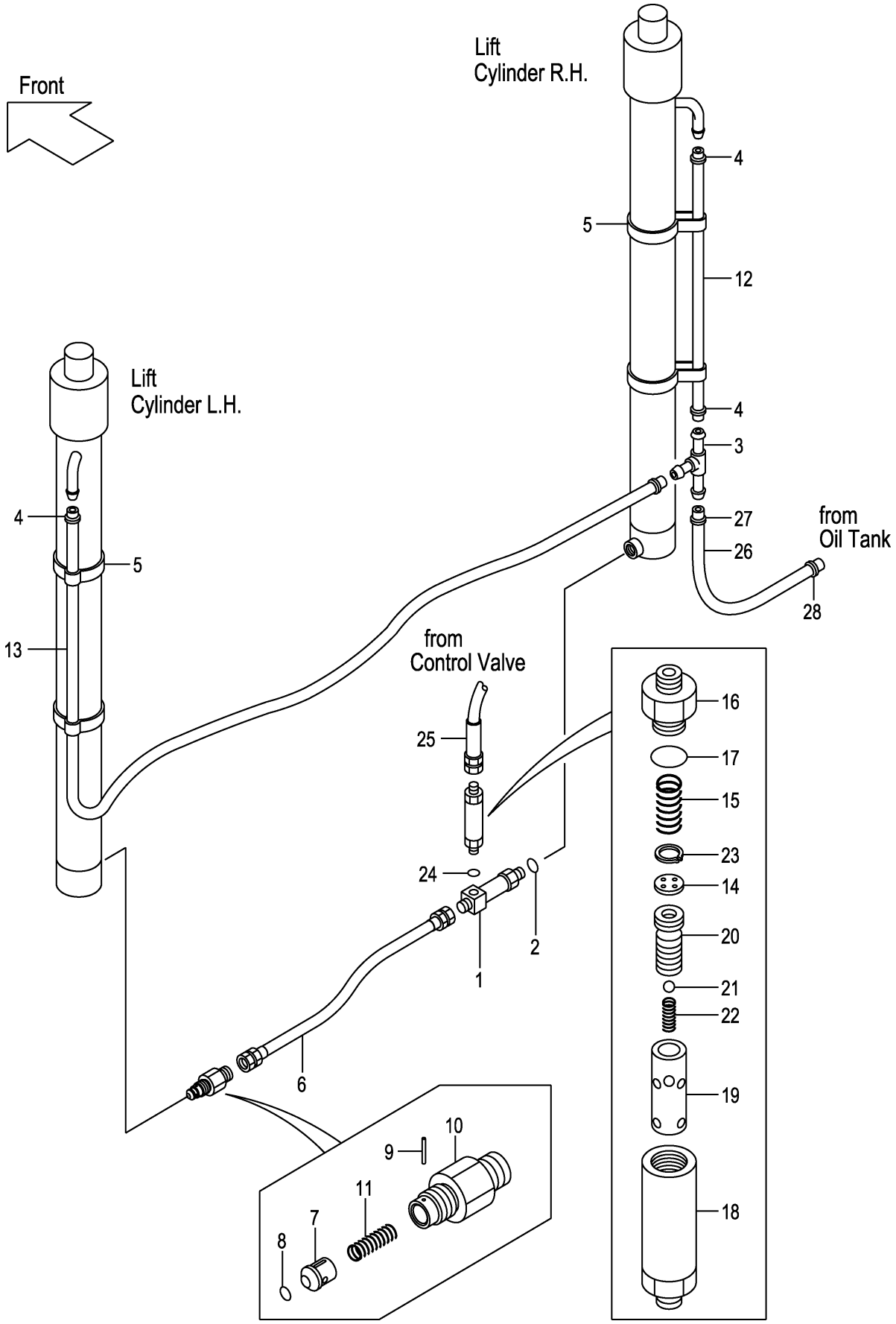

A:VM0A7(1.0T)
B:VM0A7(1.5T)
C:VM0A9(1.8T)

FIG.191
(M7018420)

Item No	Part No.	Mark	Description		Req'd	Remarks : Serial No.
-	04710-04165		HOSE VM275	ﾎｰｽ	1	A,B [FC][RTL]
-	04710-04175		HOSE VM300	ﾎｰｽ	1	A,B [FC][RTL]
-	04710-04190		HOSE VM325	ﾎｰｽ	1	A,B [FC][RTL]
-	04710-04195		HOSE VM330	ﾎｰｽ	1	A,B [FC][RTL]
-	04710-04205		HOSE VM350	ﾎｰｽ	1	A,B [FC][RTL]
-	04710-04215		HOSE VM366	ﾎｰｽ	1	A,B [FC][RTL]
-	04710-04215		HOSE VM370	ﾎｰｽ	1	A,B [FC][RTL]
-	04710-04215		HOSE VM375	ﾎｰｽ	1	A,B [FC][RTL]
-	04710-04235		HOSE VM400	ﾎｰｽ	1	A,B [FC][RTL]
-	04710-04245		HOSE VM425	ﾎｰｽ	1	A,B [FC][RTL]
-	04710-04260		HOSE VM450	ﾎｰｽ	1	A,B [FC][RTL]
-	04710-04270		HOSE VM475	ﾎｰｽ	1	A,B [FC][RTL]
-	04710-04285		HOSE VM500	ﾎｰｽ	1	A,B [FC][RTL]
-	04710-04315		HOSE VM550	ﾎｰｽ	1	A,B [FC][RTL]
-	04710-04340		HOSE VM600	ﾎｰｽ	1	A,B [FC][RTL]
A3	216G8-41001		REGULATOR-ASSY	ﾚｷﾞｭﾚｰﾀｱｯｾﾝ	1	INC.14-23
14	NO PART NO.	#	PLATE	ﾌﾟﾚｰﾄ	1	
15	27979-43101		SPRING	ｽﾌﾟﾘﾝｸﾞ	1	
16	NO PART NO.	#	NIPPLE	ﾆｯﾌﾟﾙ	1	
17	03300-00280		O-RING	Oﾘﾝｸﾞ	1	
18	NO PART NO.	#	CASE	ｹｰｽ	1	
19	NO PART NO.	#	SLEEVE	ｽﾘｰﾌﾞ	1	
20	NO PART NO.	#	PISTON	ﾋﾟｽﾄﾝ	1	
21	24459-42951		BALL,NYLON	ﾎﾞｰﾙ	1	
22	214A8-44151		SPRING	ｽﾌﾟﾘﾝｸﾞ	1	
23	02110-00018		RING,SNAP	ﾘﾝｸﾞ	1	
24	03320-00180		O-RING	Oﾘﾝｸﾞ	1	
25	20A78-40501		HOSE	ﾎｰｽ	1	
-	20A78-40501		HOSE	ﾎｰｽ	1	A,B [FC][RTL]
26	23678-40140		TUBE	ﾁｭｰﾌﾞ	1	
-	04710-04140		HOSE	ﾎｰｽ	1	A,B [FC][RTL]
27	04911-00018		CLIP	ｸﾘｯﾌﾟ	1	

FIG.191 MAST PIPING [VM0A7,VM0A9]

(M7018420) マストパイピング

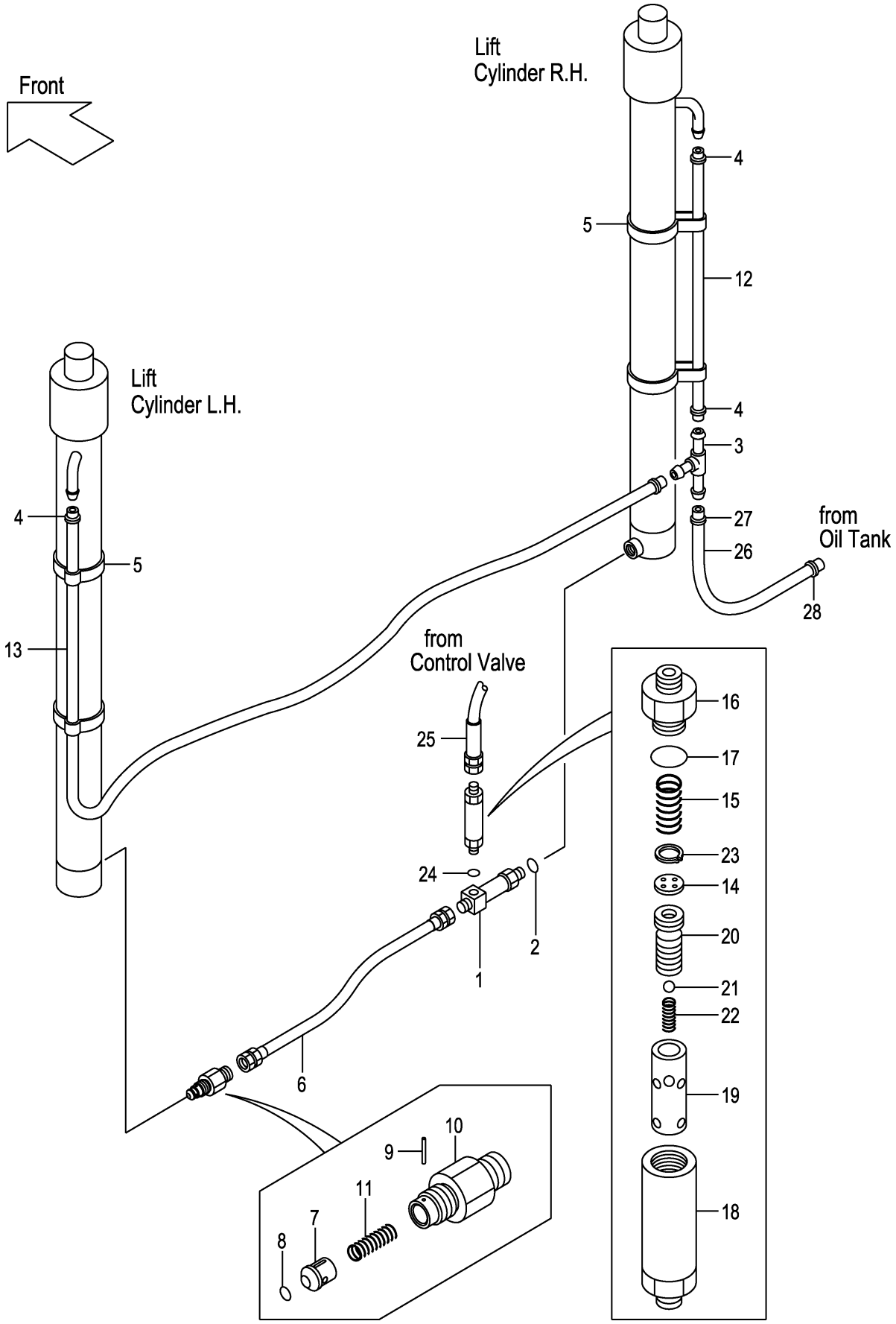

A:VMOA7(1.0T)
B:VMOA7(1.5T)
C:VMOA9(1.8T)

FIG.191
(M7018420)

Item No	Part No.	Mark	Description	Req'd	Remarks : Serial No.
-	24329-46201		CLIP ｸﾘｯﾌﾟ	1	A,B [FC][RTL]
28	04914-00016		CLIP ｸﾘｯﾌﾟ	1	
-	04911-00021		CLIP ｸﾘｯﾌﾟ	1	A,B [FC][RTL]

FIG.192 FORK [VFM0A7]

(M7018120) フォーク

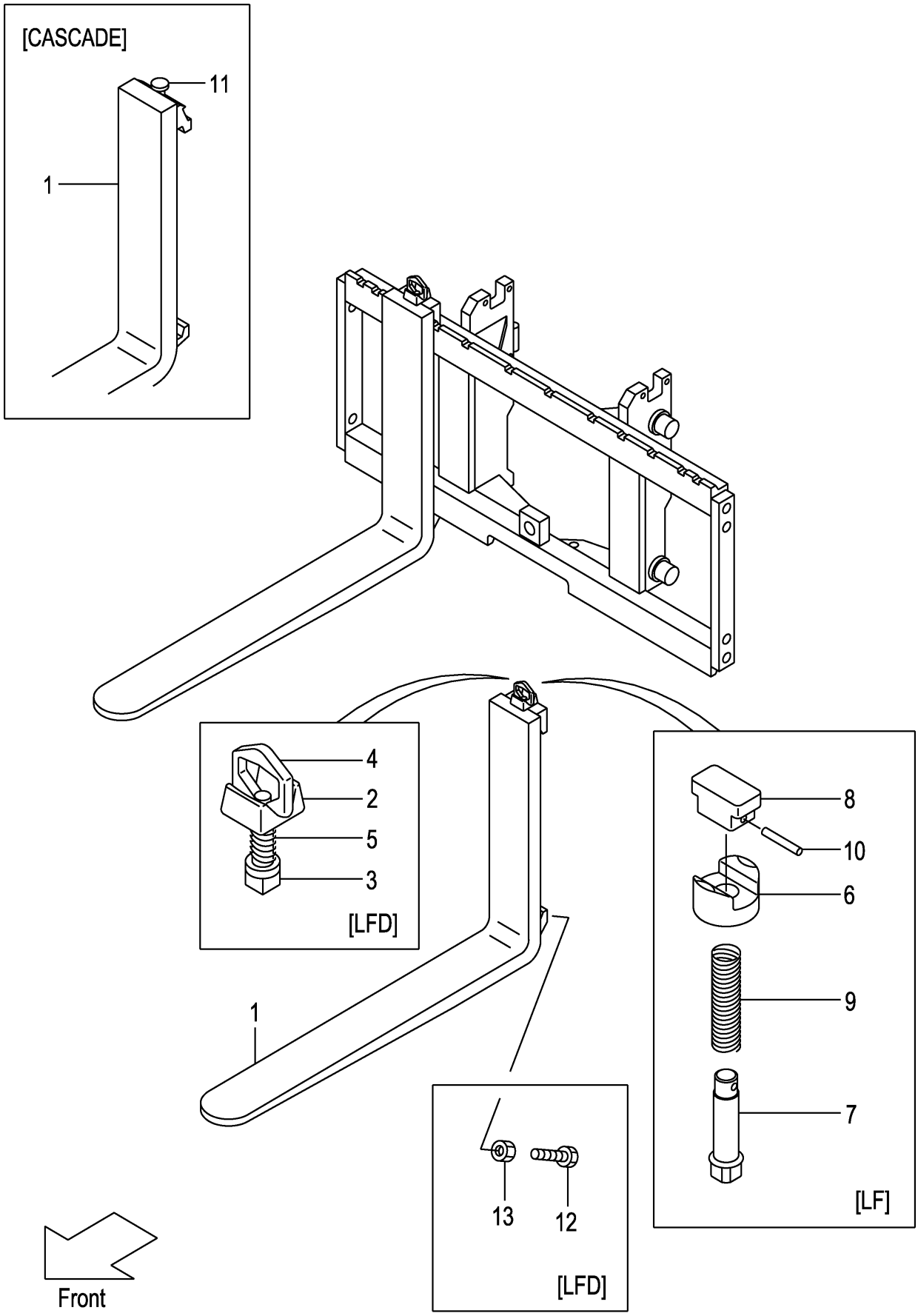

A:VFMOA7(1.0T)
B:VFMOA7(1.5T,1.8T)

Item No	Part No.	Mark	Description		Req'd	Remarks : Serial No.
1	210B8-10502		FORK	ﾌｫｰｸ	2	A
						(L=770) INC.6-10
-	210F8-10512		FORK	ﾌｫｰｸ	2	B
						(L=920) INC.6-10
-	210F8-10512		FORK	ﾌｫｰｸ	2	[EX](L=920) INC.6-10
-	210B8-10502		FORK	ﾌｫｰｸ	2	A
						[LF077] INC.6-10
-	210B8-10512		FORK	ﾌｫｰｸ	2	A
						[LF085] INC.6-10
-	210F8-10502		FORK	ﾌｫｰｸ	2	B
						[LF085] INC.6-10
-	210F8-10572		FORK	ﾌｫｰｸ	2	[LF090] INC.6-10
-	210B8-10522		FORK	ﾌｫｰｸ	2	A
						[LF092] INC.6-10
-	210F8-10512		FORK	ﾌｫｰｸ	2	B
						[LF092] INC.6-10
-	210F8-10582		FORK	ﾌｫｰｸ	2	[LF100] INC.6-10
-	210F8-10522		FORK	ﾌｫｰｸ	2	[LF107] INC.6-10
-	210F8-10592		FORK	ﾌｫｰｸ	2	[LF110] INC.6-10
-	210F8-10602		FORK	ﾌｫｰｸ	2	[LF120] INC.6-10
-	210F8-10532		FORK	ﾌｫｰｸ	2	[LF122] INC.6-10
-	210H8-10612		FORK	ﾌｫｰｸ	2	[LF130] INC.6-10
-	210H8-10532		FORK	ﾌｫｰｸ	2	[LF137] INC.6-10
-	210H8-10622		FORK	ﾌｫｰｸ	2	[LF140] INC.6-10
-	210H8-10632		FORK	ﾌｫｰｸ	2	[LF150] INC.6-10
-	210H8-10542		FORK	ﾌｫｰｸ	2	[LF152] INC.6-10
-	210H8-10642		FORK	ﾌｫｰｸ	2	[LF160] INC.6-10
-	210H8-10552		FORK	ﾌｫｰｸ	2	B
						[LF167] INC.6-10
-	216B8-10301		FORK	ﾌｫｰｸ	2	A
						[LFD077] INC.2-5
-	216B8-10311		FORK	ﾌｫｰｸ	2	A
						[LFD085] INC.2-5
-	216G8-10301		FORK	ﾌｫｰｸ	2	B
						[LFD085] INC.2-5
-	216G8-10371		FORK	ﾌｫｰｸ	2	[LFD090] INC.2-5
-	216B8-10321		FORK	ﾌｫｰｸ	2	A
						[LFD092] INC.2-5
-	216G8-10311		FORK	ﾌｫｰｸ	2	B
						[LFD092] INC.2-5
-	216G8-10381		FORK	ﾌｫｰｸ	2	[LFD100] INC.2-5
-	216G8-10321		FORK	ﾌｫｰｸ	2	[LFD107] INC.2-5
-	216G8-10391		FORK	ﾌｫｰｸ	2	[LFD110] INC.2-5
-	216G8-10401		FORK	ﾌｫｰｸ	2	[LFD120] INC.2-5
-	216G8-10331		FORK	ﾌｫｰｸ	2	[LFD122] INC.2-5
-	216G8-10411		FORK	ﾌｫｰｸ	2	[LFD130] INC.2-5
-	216G8-10341		FORK	ﾌｫｰｸ	2	[LFD137] INC.2-5
-	216G8-10421		FORK	ﾌｫｰｸ	2	[LFD140] INC.2-5
-	216G8-10431		FORK	ﾌｫｰｸ	2	[LFD150] INC.2-5
-	216G8-10351		FORK	ﾌｫｰｸ	2	[LFD152] INC.2-5

FIG.192 FORK [VFM0A7]

(M7018120) フォーク

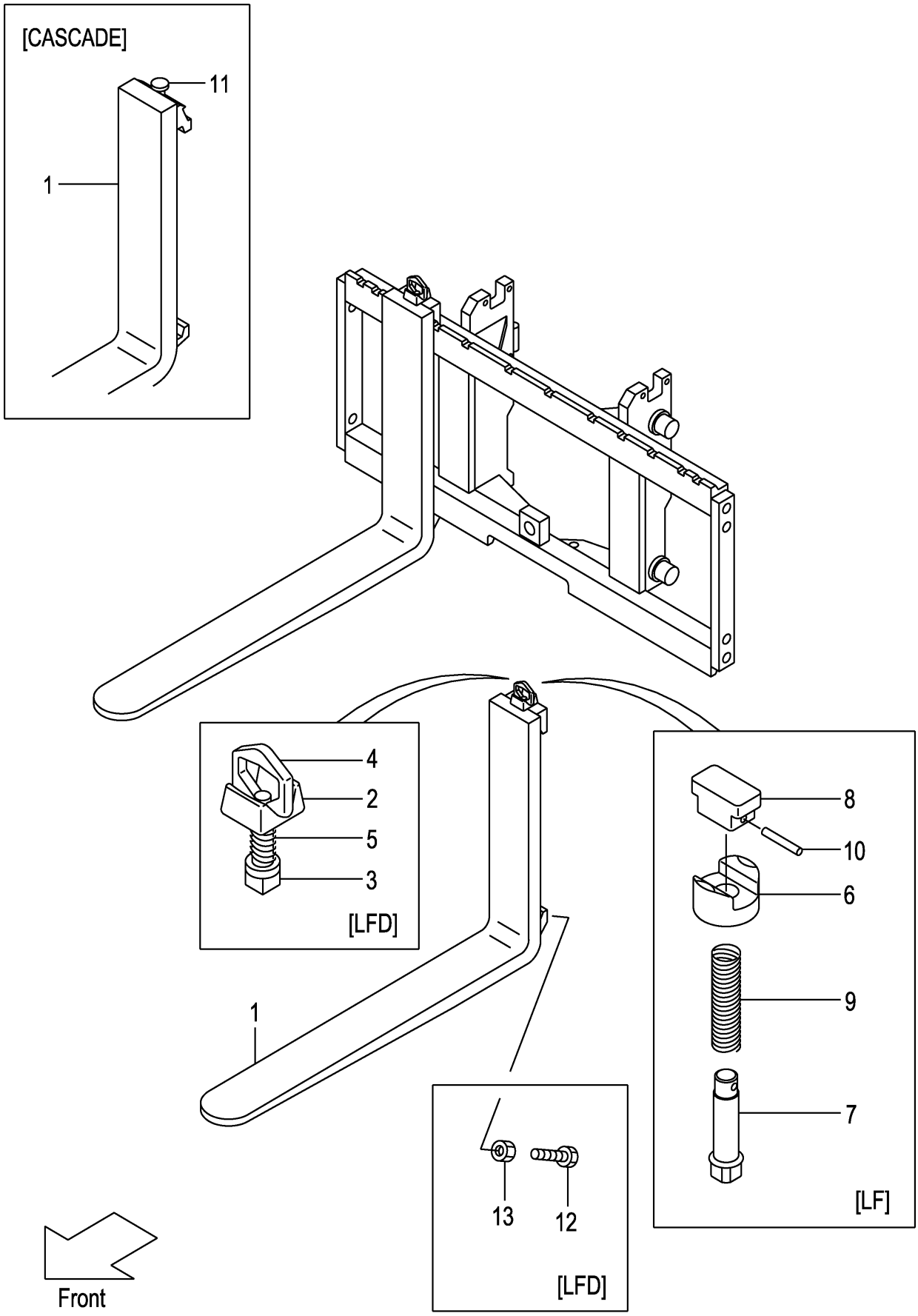

A:VFMOA7(1.0T)
B:VFMOA7(1.5T,1.8T)

Item No	Part No.	Mark	Description		Req'd	Remarks : Serial No.
-	216G8-10441		FORK	ﾌｫｰｸ	2	[LFD160] INC.2-5
-	216G8-10361		FORK	ﾌｫｰｸ	2	B
						[LFD167] INC.2-5
-	20A78-10511		FORK	ﾌｫｰｸ	2	[LF092/CASCADE] INC.11
-	20A78-10521		FORK	ﾌｫｰｸ	2	[LF107/CASCADE] INC.11
-	20A78-10531		FORK	ﾌｫｰｸ	2	[LF122/CASCADE] INC.11
A1	214A8-11001		STOPPER-ASSY,FORK	ﾌｫｰｸｽﾄｯﾊﾟｱｯｾﾝ	2	[LFD] INC.2-5
2	214A8-12001		HEAD	ﾍｯﾄﾞ	2	[LFD]
3	214A8-12011		STOPPER	ｽﾄｯﾊﾟ	2	[LFD]
4	214A8-12021		HANDLE	ﾊﾝﾄﾞﾙ	2	[LFD]
5	214A8-12031		SPRING	ｽﾌﾟﾘﾝｸﾞ	2	[LFD]
6	216G8-12921		HOLDER	ﾎﾙﾀﾞ	2	[LF]
7	231A8-12001		PIN	ﾋﾟﾝ	2	[LF]
8	231A8-12011		KNOB	ﾉﾌﾞ	2	[LF]
9	231A8-12021		SPRING	ｽﾌﾟﾘﾝｸﾞ	2	[LF]
10	231A8-12031		PIN,SPRING	ﾋﾟﾝ	2	[LF]
11	W-K2PK-M		KIT,PIN,STOPPER	ｷｯﾄ	2	[CASCADE]
12	216G8-12101		BOLT	ﾎﾞﾙﾄ	4	[LFD]
13	01402-00010		NUT	ﾅｯﾄ	4	[LFD]

FIG.193 LIFT BRACKET [VFM0A7]

(M7010610) ﾘﾌﾄﾌﾞﾗｹｯﾄ

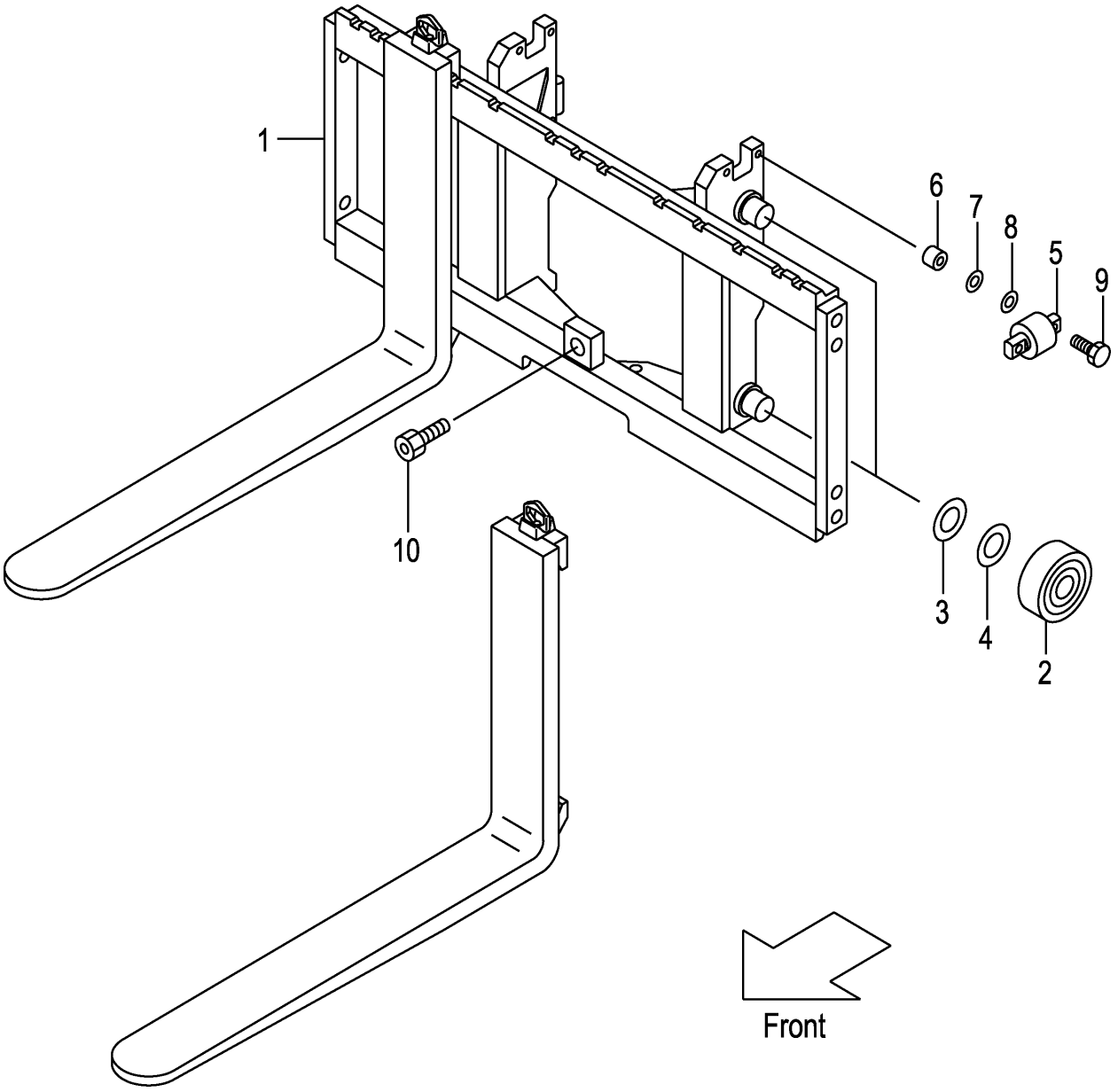

A:VFMOA7(1.0T)
B:VFMOA7(1.5T,1.8T)

Item No	Part No.	Mark	Description		Req'd	Remarks : Serial No.
1	20A70-60201		BRACKET,LIFT	ﾌﾞﾗｹｯﾄ	1	
-	50A71-61301		BRACKET,LIFT	ﾌﾞﾗｹｯﾄ	1	[WFX110][WFX114][WFX127] [WFX135][WFX138]
-	50A71-61401		BRACKET,LIFT	ﾌﾞﾗｹｯﾄ	1	[WFX135][WFX138][WFX145] [WFX146][WFX154][WFX180]
2	211F8-22201		ROLLER,END,102.0	ﾛｰﾗ	4	
-	211F8-22211		ROLLER,END,102.5	ﾛｰﾗ	(4)	
-	511F3-74021		ROLLER,END,102.0	ﾛｰﾗ	4	[FC][CS35][FCS35][FCS55] [FCS45]
-	511F3-74031		ROLLER,END,102.5	ﾛｰﾗ	(4)	[FC][CS35][FCS35][FCS55] [FCS45]
3	211F8-22261		SHIM,T-0.5	ｼﾑ	4	
4	211F8-22271		SHIM,T-1.0	ｼﾑ	8	
5	22018-30304		ROLLER,SIDE,41.0	ﾛｰﾗ	2	
-	510F3-74002		ROLLER,SIDE,41.0	ﾛｰﾗ	2	[FC][CS35][FCS35][FCS55] [FCS45]
6	22578-32841		SPACER	ｽﾍﾟｰｻ	4	
7	22018-30261		SHIM,T-0.2	ｼﾑ	8	
8	22018-30121		SHIM,T-1.0	ｼﾑ	4	
9	01103-10045		BOLT & WASHER	ﾎﾞﾙﾄ&ﾜｯｼｬ	4	
10	01184-12025		BOLT & WASHER	ﾎﾞﾙﾄ&ﾜｯｼｬ	1	

FIG.194 BACKREST [VFM0A7]

(M7018230) ﾊﾞｯｸﾚｽﾄ

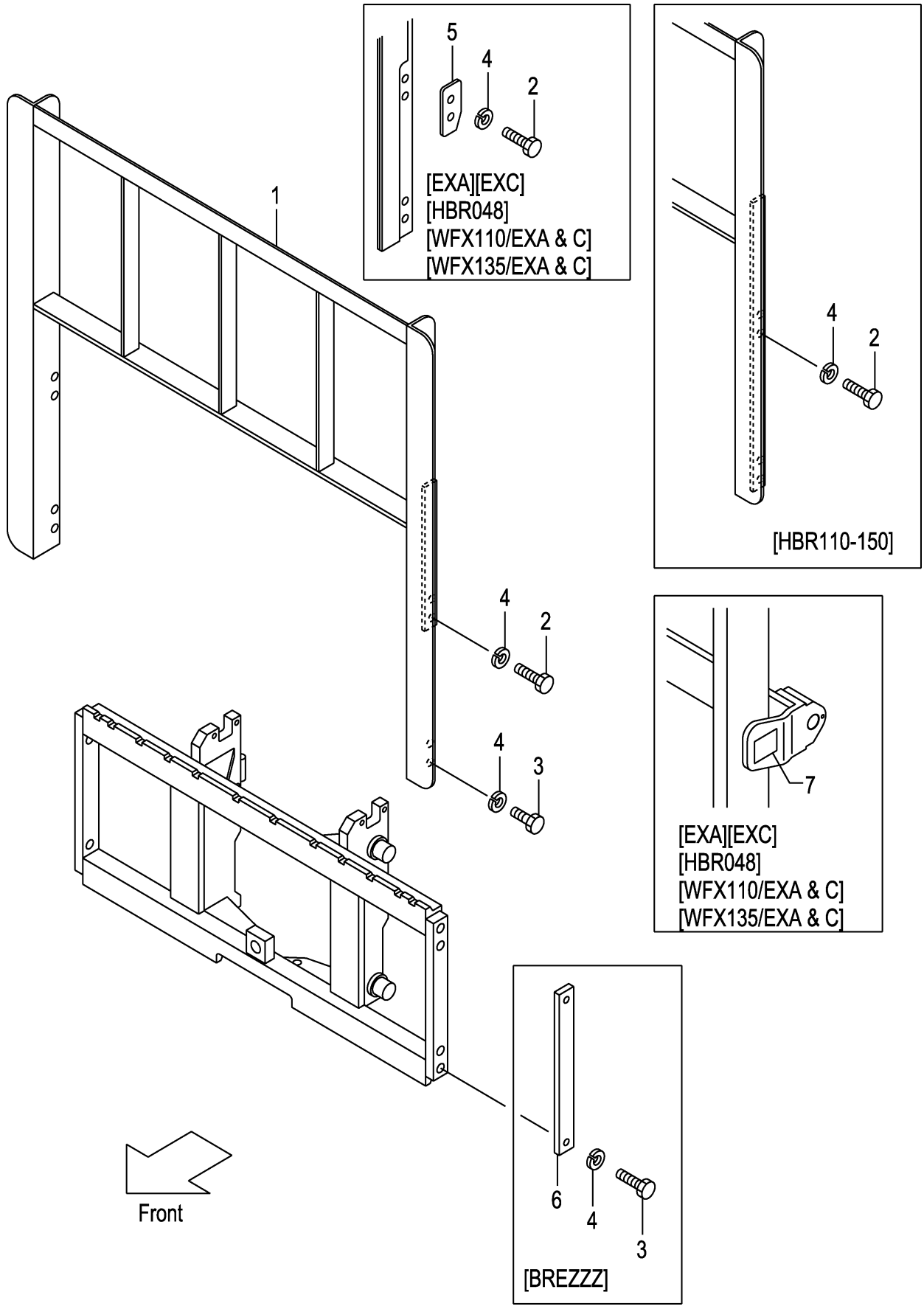

A:VFMOA7(1.0T)
B:VFMOA7(1.5T,1.8T)

Item No	Part No.	Mark	Description		Req'd	Remarks : Serial No.
1	216G8-22201		BACKREST	ﾊﾞｯｸﾚｽﾄ	1	
-	516G2-74301		BACKREST	ﾊﾞｯｸﾚｽﾄ	1	[EXA][EXC][HBR048]
-	216G8-22301		BACKREST	ﾊﾞｯｸﾚｽﾄ	1	[HBR110]
-	216G8-22311		BACKREST	ﾊﾞｯｸﾚｽﾄ	1	[HBR120]
-	216G8-22321		BACKREST	ﾊﾞｯｸﾚｽﾄ	1	[HBR130]
-	216G8-22331		BACKREST	ﾊﾞｯｸﾚｽﾄ	1	[HBR140]
-	216G8-22341		BACKREST	ﾊﾞｯｸﾚｽﾄ	1	[HBR150]
-	516G1-64301		BACKREST	ﾊﾞｯｸﾚｽﾄ	1	[WFX110]
-	516G1-64351		BACKREST	ﾊﾞｯｸﾚｽﾄ	1	[WFX135]
-	516G2-74101		BACKREST	ﾊﾞｯｸﾚｽﾄ	1	[WFX110/EXA][WFX110/EXC]
-	516G2-74201		BACKREST	ﾊﾞｯｸﾚｽﾄ	1	[WFX135/EXA][WFX135/EXC]
2	01100-14030		BOLT	ﾎﾞﾙﾄ	4	(WITHOUT BREZZZ)
-	01100-14035		BOLT	ﾎﾞﾙﾄ	4	[EXA][EXC][HBR048]
						[WFX110/EXA&C][WFX135/EXA&C]
-	01100-14030		BOLT	ﾎﾞﾙﾄ	8	[HBR110-150]
3	01100-14025		BOLT	ﾎﾞﾙﾄ	4	(WITHOUT HBR110-150)
4	02010-00014		WASHER	ﾜｯｼｬ	8	
-	02010-00014		WASHER	ﾜｯｼｬ	4	[BREZZZ]
5	534A2-74051		PLATE,STOPPER	ﾌﾟﾚｰﾄ	2	[EXA][EXC][HBR048]
						[WFX110/EXA&C][WFX135/EXA&C]
6	23659-42161		PLATE	ﾌﾟﾚｰﾄ	2	[BREZZZ]
7	534A2-74301		DECAL,CAUTION	ﾃﾞｶﾙ	1	[EXA][EXC][HBR048]
						[WFX110/EXA&C][WFX135/EXA&C]

FIG.195 MAST [VFM0A7]

(M7010410) マスト

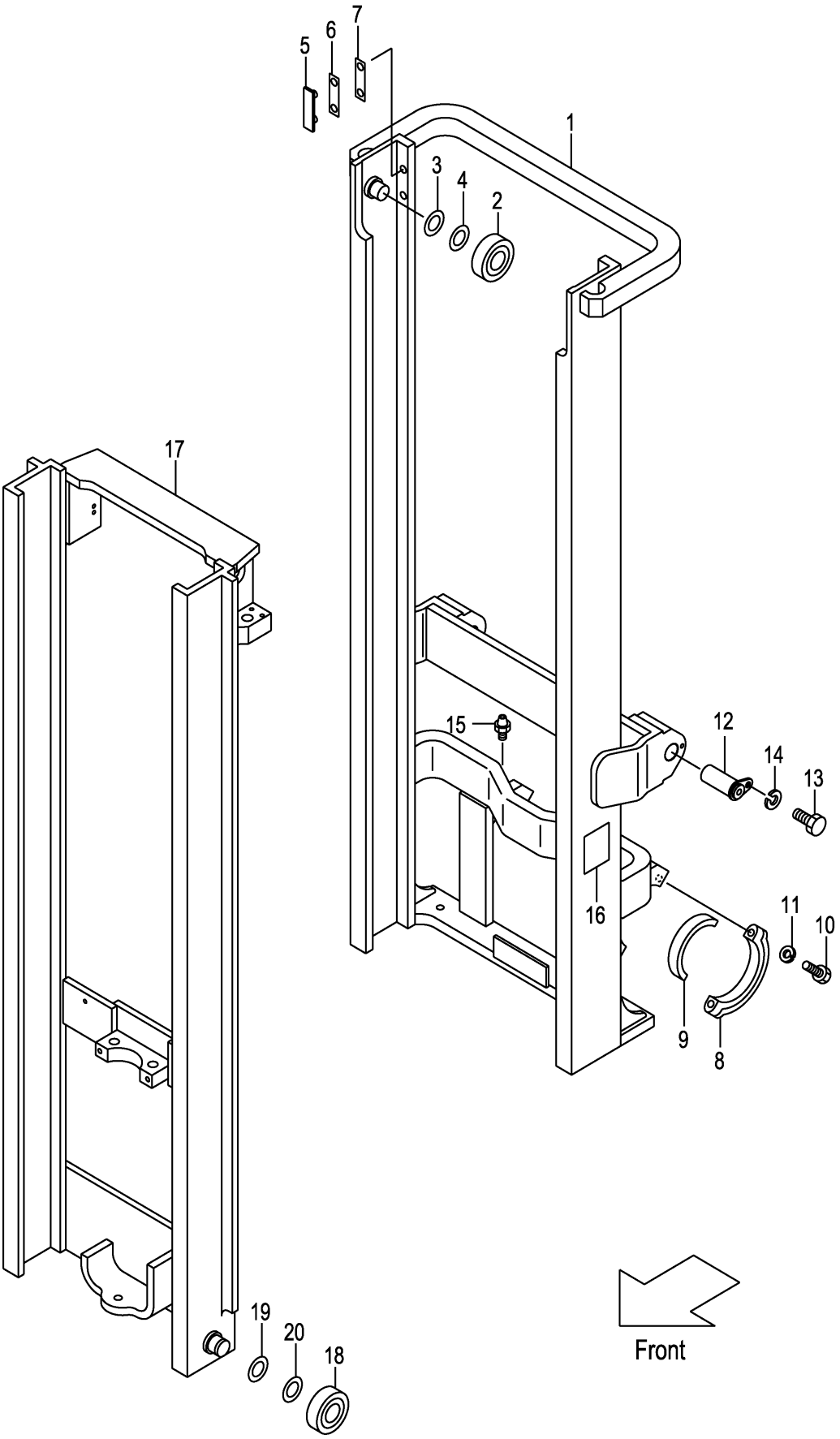

A:VFM0A7(1.0T)
B:VFM0A7(1.5T,1.8T)

Item No	Part No.	Mark	Description		Req'd	Remarks : Serial No.
1	20A70-40211		MAST,OUTER VFM200	ﾏｽﾄ	1	
-	20A70-40221		MAST,OUTER VFM225	ﾏｽﾄ	1	
-	20A70-40231		MAST,OUTER VFM250	ﾏｽﾄ	1	
-	20A70-40241		MAST,OUTER VFM270	ﾏｽﾄ	1	
-	20A70-40251		MAST,OUTER VFM275	ﾏｽﾄ	1	
-	20A70-40201		MAST,OUTER VFM300	ﾏｽﾄ	1	
-	20A70-40261		MAST,OUTER VFM325	ﾏｽﾄ	1	
-	20A70-40271		MAST,OUTER VFM330	ﾏｽﾄ	1	
-	20A70-40281		MAST,OUTER VFM350	ﾏｽﾄ	1	
-	20A70-40291		MAST,OUTER VFM366	ﾏｽﾄ	1	
-	20A70-40301		MAST,OUTER VFM370	ﾏｽﾄ	1	
-	20A70-40311		MAST,OUTER VFM375	ﾏｽﾄ	1	
-	20A70-40321		MAST,OUTER VFM400	ﾏｽﾄ	1	
-	20A70-40331		MAST,OUTER VFM425	ﾏｽﾄ	1	
-	20A70-40341		MAST,OUTER VFM450	ﾏｽﾄ	1	
-	20A70-40351		MAST,OUTER VFM475	ﾏｽﾄ	1	
-	20A70-40361		MAST,OUTER VFM500	ﾏｽﾄ	1	
-	20A70-40371		MAST,OUTER VFM550	ﾏｽﾄ	1	
-	20A70-40381		MAST,OUTER VFM600	ﾏｽﾄ	1	
2	211F8-22221		ROLLER,END,102.0	ﾛｰﾗ	2	
-	211F8-22231		ROLLER,END,102.5	ﾛｰﾗ	(2)	
-	511F3-74021		ROLLER,END,102.0	ﾛｰﾗ	2	[FC][CS35][FCS35][FCS55] [FCS45]
-	511F3-74031		ROLLER,END,102.5	ﾛｰﾗ	(2)	[FC][CS35][FCS35][FCS55] [FCS45]
3	211F8-22261		SHIM,T-0.5	ｼﾑ	4	
4	211F8-22271		SHIM,T-1.0	ｼﾑ	8	
5	216G8-33401		SLIPPER	ｽﾘｯﾊﾟ	2	
6	216G8-33361		SHIM,T-0.5	ｼﾑ	8	
7	216G8-33371		SHIM,T-1.0	ｼﾑ	4	
8	210F6-12441		CAP	ｷｬｯﾌﾟ	2	
9	216G8-02001		BUSHING	ﾌﾞｯｼﾝｸﾞ	2	
10	01103-14065		BOLT	ﾎﾞﾙﾄ	4	
11	02010-00014		WASHER	ﾜｯｼｬ	4	
12	272K8-52201		PIN	ﾋﾟﾝ	2	
13	216G8-52301		BOLT	ﾎﾞﾙﾄ	2	
14	02010-20012		WASHER	ﾜｯｼｬ	2	
15	04901-00100		FITTING	ﾌｨｯﾃｨﾝｸﾞ	2	
16	23678-06002		PLATE,NAME	ﾌﾟﾚｰﾄ	1	
17	20A70-40411		MAST,INNER VFM200	ﾏｽﾄ	1	
-	20A70-40421		MAST,INNER VFM225	ﾏｽﾄ	1	
-	20A70-40431		MAST,INNER VFM250	ﾏｽﾄ	1	
-	20A70-40441		MAST,INNER VFM270	ﾏｽﾄ	1	
-	20A70-40451		MAST,INNER VFM275	ﾏｽﾄ	1	
-	20A70-40401		MAST,INNER VFM300	ﾏｽﾄ	1	
-	20A70-40461		MAST,INNER VFM325	ﾏｽﾄ	1	
-	20A70-40471		MAST,INNER VFM330	ﾏｽﾄ	1	
-	20A70-40481		MAST,INNER VFM350	ﾏｽﾄ	1	
-	20A70-40491		MAST,INNER VFM366	ﾏｽﾄ	1	
-	20A70-40501		MAST,INNER VFM370	ﾏｽﾄ	1	

FIG.195 MAST [VFM0A7]

(M7010410) マスト

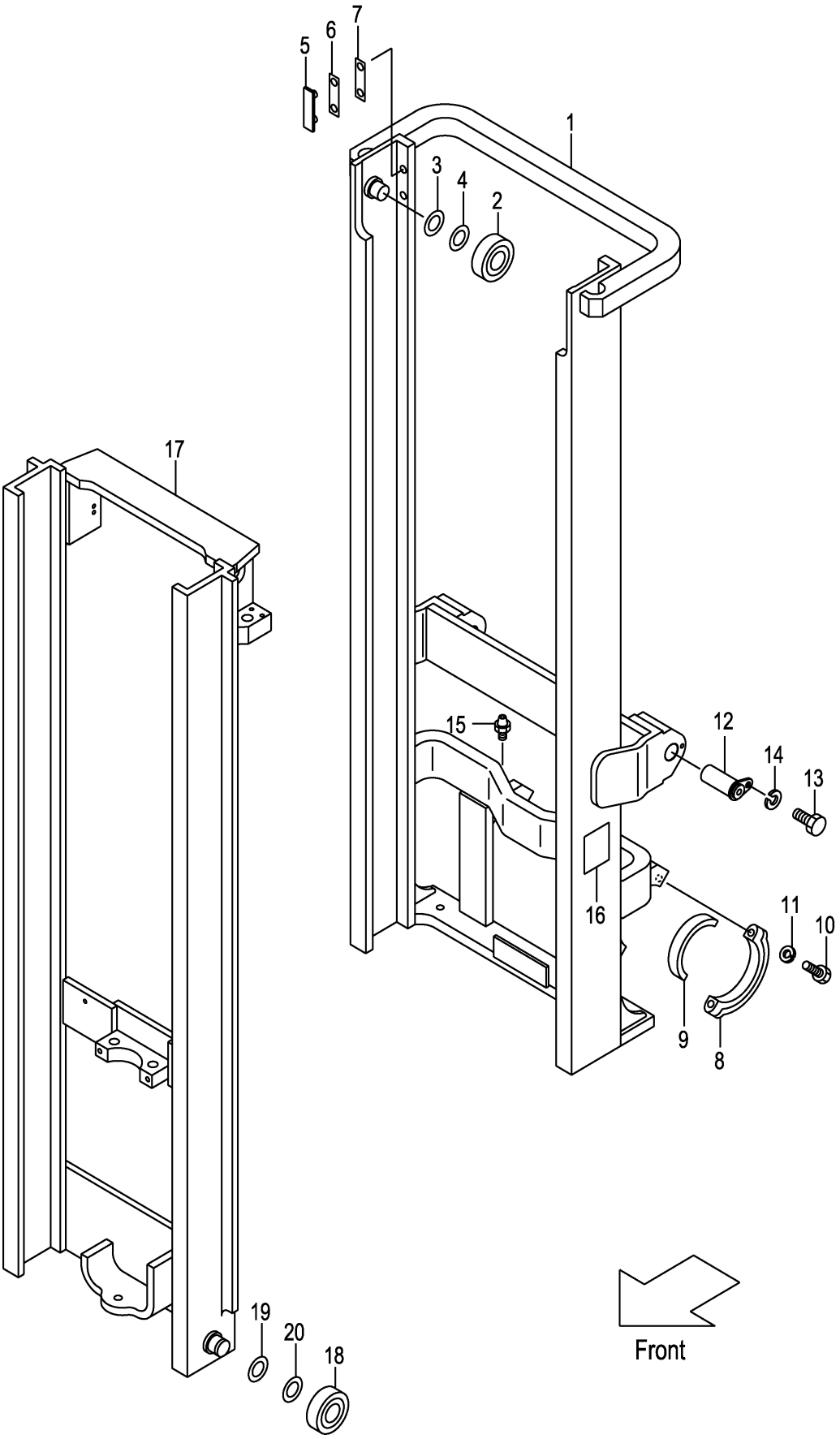

A:VFMOA7(1.0T)
B:VFMOA7(1.5T,1.8T)

Item No	Part No.	Mark	Description		Req'd	Remarks : Serial No.
-	20A70-40511		MAST,INNER VFM375	ﾏｽﾄ	1	
-	20A70-40521		MAST,INNER VFM400	ﾏｽﾄ	1	
-	20A70-40531		MAST,INNER VFM425	ﾏｽﾄ	1	
-	20A70-40541		MAST,INNER VFM450	ﾏｽﾄ	1	
-	20A70-40551		MAST,INNER VFM475	ﾏｽﾄ	1	
-	20A70-40561		MAST,INNER VFM500	ﾏｽﾄ	1	
-	20A70-40571		MAST,INNER VFM550	ﾏｽﾄ	1	
-	20A70-40581		MAST,INNER VFM600	ﾏｽﾄ	1	
18	211F8-22221		ROLLER,END,102.0	ﾛｰﾗ	2	
-	211F8-22231		ROLLER,END,102.5	ﾛｰﾗ	(2)	
-	511F3-74021		ROLLER,END,102.0	ﾛｰﾗ	2	[FC][CS35][FCS35][FCS55] [FCS45]
-	511F3-74031		ROLLER,END,102.5	ﾛｰﾗ	(2)	[FC][CS35][FCS35][FCS55] [FCS45]
19	211F8-22261		SHIM,T-0.5	ｼﾑ	4	
20	211F8-22271		SHIM,T-1.0	ｼﾑ	8	
21	229F6-42211	+	SEAL	ｼｰﾙ	8	

FIG.196 LIFT CYLINDER (FRONT)[VFM0A7]

(M7010510) リフトシリンダ(フロント)

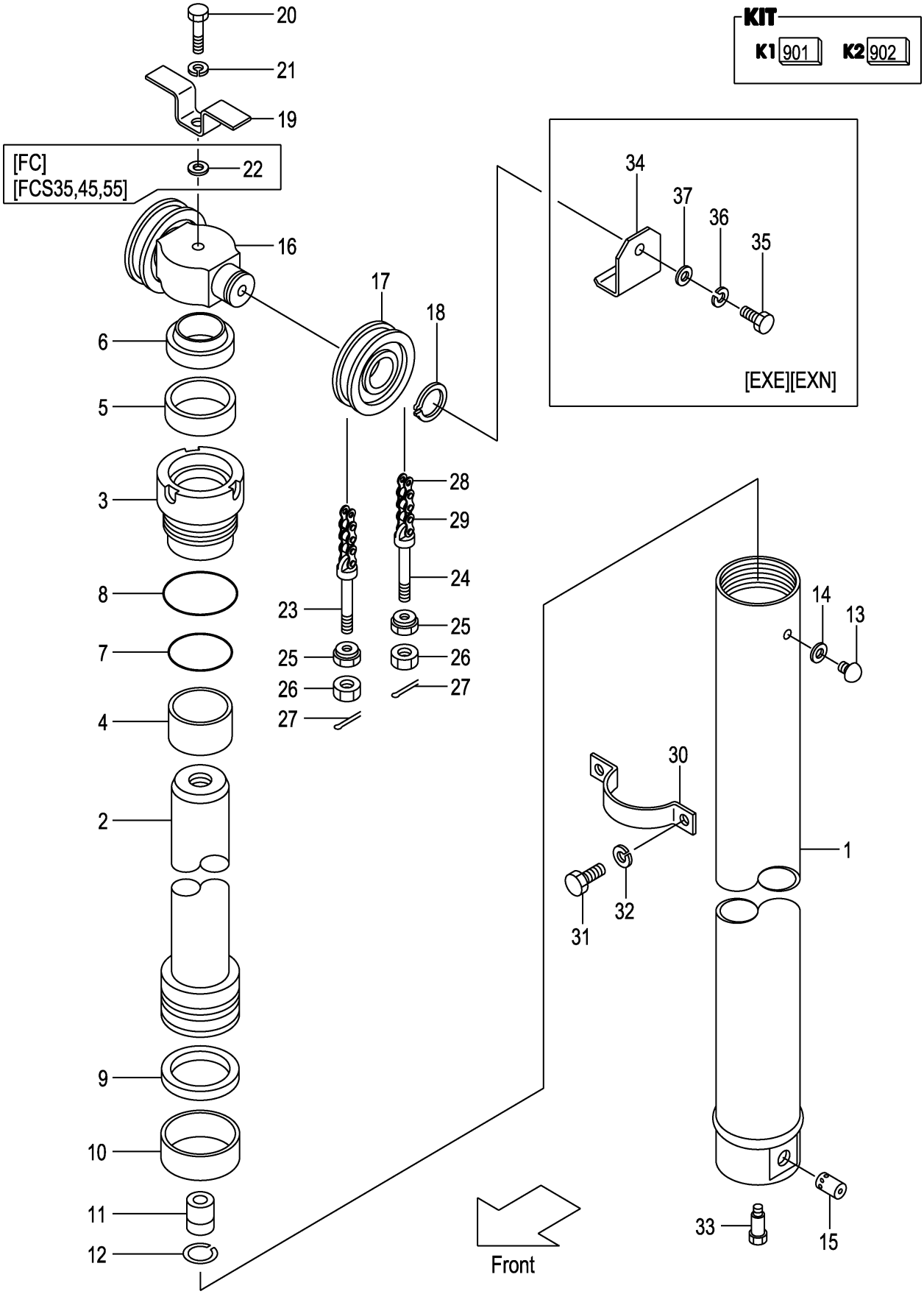

A:VFM0A7(1.0T)
B:VFM0A7(1.5T,1.8T)

Item No	Part No.	Mark	Description		Req'd	Remarks : Serial No.
A1	20A70-50511		CYL-ASSY,LIFT VFM200	ﾘﾌﾄｼﾘﾝﾀﾞｱｯｾﾝ	1	INC.1-15
-	20A70-50521		CYL-ASSY,LIFT VFM225	ﾘﾌﾄｼﾘﾝﾀﾞｱｯｾﾝ	1	INC.1-15
-	212R0-80511		CYL-ASSY,LIFT VFM250	ﾘﾌﾄｼﾘﾝﾀﾞｱｯｾﾝ	1	INC.1-15
-	212R0-50501		CYL-ASSY,LIFT VFM270	ﾘﾌﾄｼﾘﾝﾀﾞｱｯｾﾝ	1	INC.1-15
-	212R0-80521		CYL-ASSY,LIFT VFM275	ﾘﾌﾄｼﾘﾝﾀﾞｱｯｾﾝ	1	INC.1-15
-	212R0-80531		CYL-ASSY,LIFT VFM300	ﾘﾌﾄｼﾘﾝﾀﾞｱｯｾﾝ	1	INC.1-15
-	212R0-50511		CYL-ASSY,LIFT VFM325	ﾘﾌﾄｼﾘﾝﾀﾞｱｯｾﾝ	1	INC.1-15
-	212R0-80501		CYL-ASSY,LIFT VFM330	ﾘﾌﾄｼﾘﾝﾀﾞｱｯｾﾝ	1	INC.1-15
-	212R0-80541		CYL-ASSY,LIFT VFM350	ﾘﾌﾄｼﾘﾝﾀﾞｱｯｾﾝ	1	INC.1-15
-	212R0-50521		CYL-ASSY,LIFT VFM366	ﾘﾌﾄｼﾘﾝﾀﾞｱｯｾﾝ	1	INC.1-15
-	212R0-50531		CYL-ASSY,LIFT VFM370	ﾘﾌﾄｼﾘﾝﾀﾞｱｯｾﾝ	1	INC.1-15
-	212R0-80551		CYL-ASSY,LIFT VFM375	ﾘﾌﾄｼﾘﾝﾀﾞｱｯｾﾝ	1	INC.1-15
-	212R0-50541		CYL-ASSY,LIFT VFM400	ﾘﾌﾄｼﾘﾝﾀﾞｱｯｾﾝ	1	INC.1-15
-	212R0-50551		CYL-ASSY,LIFT VFM425	ﾘﾌﾄｼﾘﾝﾀﾞｱｯｾﾝ	1	INC.1-15
-	212R0-50561		CYL-ASSY,LIFT VFM450	ﾘﾌﾄｼﾘﾝﾀﾞｱｯｾﾝ	1	INC.1-15
-	212R0-50571		CYL-ASSY,LIFT VFM475	ﾘﾌﾄｼﾘﾝﾀﾞｱｯｾﾝ	1	INC.1-15
-	212R0-50581		CYL-ASSY,LIFT VFM500	ﾘﾌﾄｼﾘﾝﾀﾞｱｯｾﾝ	1	INC.1-15
-	212R0-50591		CYL-ASSY,LIFT VFM550	ﾘﾌﾄｼﾘﾝﾀﾞｱｯｾﾝ	1	INC.1-15
-	212R0-50601		CYL-ASSY,LIFT VFM600	ﾘﾌﾄｼﾘﾝﾀﾞｱｯｾﾝ	1	INC.1-15
901	B-B670B-00024	K1	KIT,HEAD	ﾍｯﾄﾞｷｯﾄ	1	INC.3,4
902	B-B670A-00009	K2	KIT,REPAIR	ﾘﾍﾟｱｷｯﾄ	1	INC.5-10,14
1	B-B6817-94301		BODY,CYL VFM200	ﾎﾞﾃﾞｨ	1	
-	B-B6817-94401		BODY,CYL VFM225	ﾎﾞﾃﾞｨ	1	
-	B-B6717-86101		BODY,CYL VFM250	ﾎﾞﾃﾞｨ	1	
-	B-B6717-90601		BODY,CYL VFM270	ﾎﾞﾃﾞｨ	1	
-	B-B6717-86201		BODY,CYL VFM275	ﾎﾞﾃﾞｨ	1	
-	B-B6717-86301		BODY,CYL VFM300	ﾎﾞﾃﾞｨ	1	
-	B-B6717-90701		BODY,CYL VFM325	ﾎﾞﾃﾞｨ	1	
-	B-B6717-86401		BODY,CYL VFM330	ﾎﾞﾃﾞｨ	1	
-	B-B6717-86501		BODY,CYL VFM350	ﾎﾞﾃﾞｨ	1	
-	B-B6717-90801		BODY,CYL VFM366	ﾎﾞﾃﾞｨ	1	
-	B-B6717-90901		BODY,CYL VFM370	ﾎﾞﾃﾞｨ	1	
-	B-B6717-86601		BODY,CYL VFM375	ﾎﾞﾃﾞｨ	1	
-	B-B6717-91001		BODY,CYL VFM400	ﾎﾞﾃﾞｨ	1	
-	B-B6717-91101		BODY,CYL VFM425	ﾎﾞﾃﾞｨ	1	
-	B-B6717-91201		BODY,CYL VFM450	ﾎﾞﾃﾞｨ	1	
-	B-B6717-91301		BODY,CYL VFM475	ﾎﾞﾃﾞｨ	1	
-	B-B6717-91401		BODY,CYL VFM500	ﾎﾞﾃﾞｨ	1	
-	B-B6717-91501		BODY,CYL VFM550	ﾎﾞﾃﾞｨ	1	
-	B-B6717-91601		BODY,CYL VFM600	ﾎﾞﾃﾞｨ	1	
2	B-B6817-94302		ROD VFM200	ﾛｯﾄﾞ	1	
-	B-B6817-94402		ROD VFM225	ﾛｯﾄﾞ	1	
-	B-B6717-86102		ROD VFM250	ﾛｯﾄﾞ	1	
-	B-B6717-90602		ROD VFM270	ﾛｯﾄﾞ	1	
-	B-B6717-86202		ROD VFM275	ﾛｯﾄﾞ	1	
-	B-B6717-86302		ROD VFM300	ﾛｯﾄﾞ	1	
-	B-B6717-90702		ROD VFM325	ﾛｯﾄﾞ	1	
-	B-B6717-86402		ROD VFM330	ﾛｯﾄﾞ	1	
-	B-B6717-86502		ROD VFM350	ﾛｯﾄﾞ	1	
-	B-B6717-90802		ROD VFM366	ﾛｯﾄﾞ	1	

FIG.196 LIFT CYLINDER (FRONT)[VFM0A7]

(M7010510) リフトシリンダ(フロント)

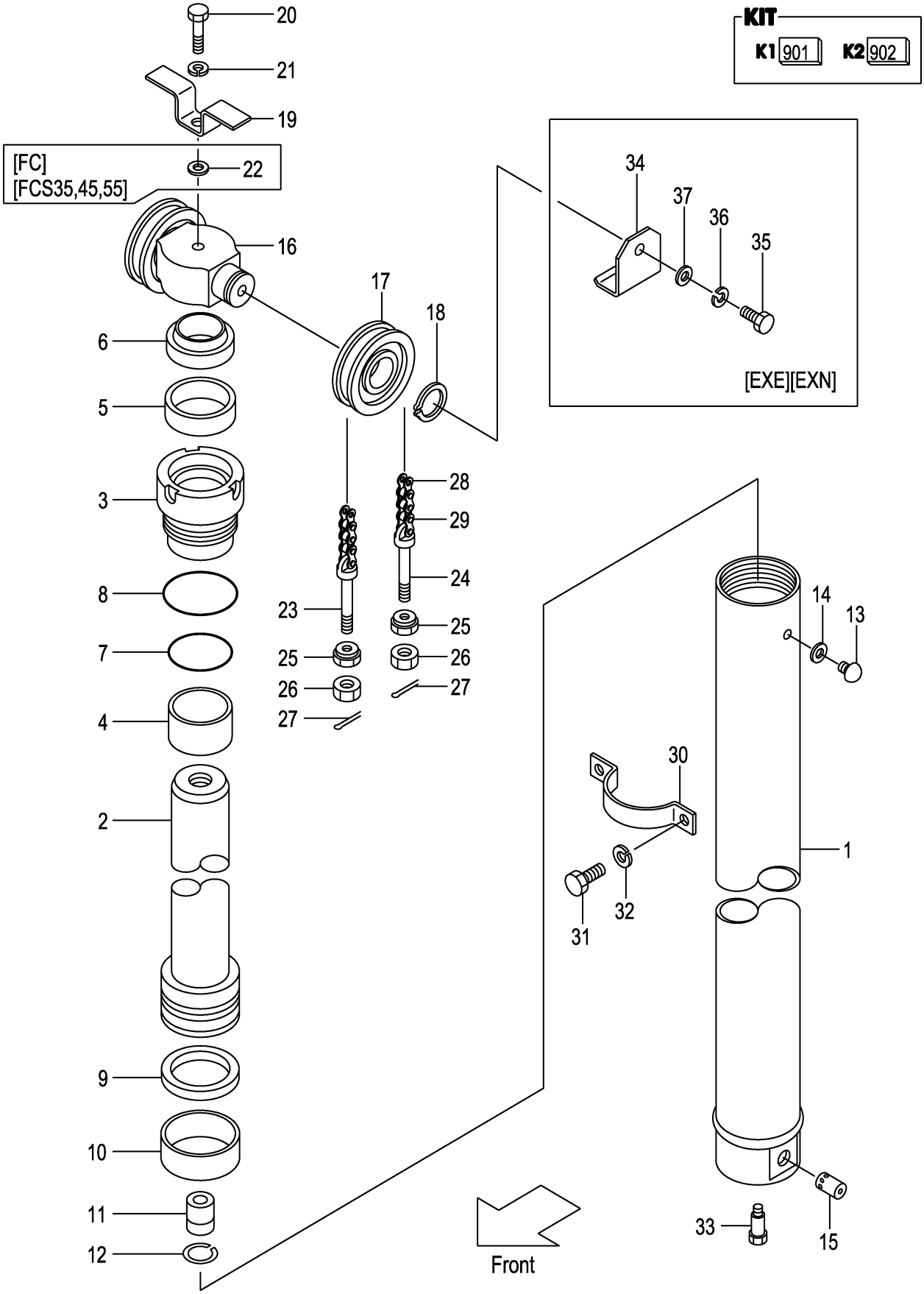

A:VFM0A7(1.0T)
B:VFM0A7(1.5T,1.8T)

Item No	Part No.	Mark	Description		Req'd	Remarks : Serial No.
-	B-B6717-90902		ROD VFM370	ﾛｯﾄﾞ	1	
-	B-B6717-86602		ROD VFM375	ﾛｯﾄﾞ	1	
-	B-B6717-91002		ROD VFM400	ﾛｯﾄﾞ	1	
-	B-B6717-91102		ROD VFM425	ﾛｯﾄﾞ	1	
-	B-B6717-91202		ROD VFM450	ﾛｯﾄﾞ	1	
-	B-B6717-91302		ROD VFM475	ﾛｯﾄﾞ	1	
-	B-B6717-91402		ROD VFM500	ﾛｯﾄﾞ	1	
-	B-B6717-91502		ROD VFM550	ﾛｯﾄﾞ	1	
-	B-B6717-91602		ROD VFM600	ﾛｯﾄﾞ	1	
3	NO PART NO.	#*	HEAD	ﾍｯﾄﾞ	1	
4	B-30131-55009	*	BUSHING	ﾌﾞｯｼﾝｸﾞ	1	
5	B-30961-55013	*	U-RING	Uﾘﾝｸﾞ	1	
6	B-30191-55050	*	RING,WIPER	ﾘﾝｸﾞ	1	
7	B-95123-06500	*	O-RING	Oﾘﾝｸﾞ	1	
8	B-95151-07000	*	O-RING	Oﾘﾝｸﾞ	1	
9	B-B6983-70007	*	RING,SEAL	ﾘﾝｸﾞ	1	
10	B-B6181-70007	*	RING,SLIDE	ﾘﾝｸﾞ	1	
11	B-C4300-22001		VALVE,CHECK	ﾊﾞﾙﾌﾞ	1	
12	B-94721-22101		RING,SNAP	ﾘﾝｸﾞ	1	
13	B-B6521-90004		PLUG	ﾌﾟﾗｸﾞ	1	
14	B-B6711-00001	*	GASKET	ｶﾞｽｹｯﾄ	1	
15	B-26570-30115		VALVE	ﾊﾞﾙﾌﾞ	1	
16	212R0-83001		HEAD,PISTON	ﾍｯﾄﾞ	1	
17	216G8-42031		SHEEVE	ｼｰﾌﾞ	2	
-	516G3-74001		SHEEVE	ｼｰﾌﾞ	2	[FC][FCS35][FCS45][FCS55]
18	02100-00035		RING,SNAP	ﾘﾝｸﾞ	2	
19	215T0-83021		STOPPER,CHAIN	ｽﾄｯﾊﾟ	1	
20	01100-16060		BOLT	ﾎﾞﾙﾄ	1	
-	01100-16065		BOLT	ﾎﾞﾙﾄ	1	[FC][FCS35][FCS45][FCS55]
21	02010-00016		WASHER	ﾜｯｼｬ	1	
22	02000-00016		WASHER	ﾜｯｼｬ	1	[FC][FCS35][FCS45][FCS55]
23	218G8-42501		PIN,ANCHOR	ﾋﾟﾝ	2	
-	510F5-54051		PIN,ANCHOR	ﾋﾟﾝ	2	[FC][FCS35][FCS55][FCS45]
24	218G8-42521		PIN,ANCHOR	ﾋﾟﾝ	2	
-	510F5-54061		PIN,ANCHOR	ﾋﾟﾝ	2	[FC][FCS35][FCS55][FCS45]
25	22118-40181		NUT	ﾅｯﾄ	4	
26	01400-00014		NUT	ﾅｯﾄ	4	
27	02200-03030		PIN	ﾋﾟﾝ	4	
28	218G8-45631		CHAIN,LEAF VFM200	ﾁｪｰﾝ	2	INC.29
-	218G8-45711		CHAIN,LEAF VFM225	ﾁｪｰﾝ	2	INC.29
-	218G8-45791		CHAIN,LEAF VFM250	ﾁｪｰﾝ	2	INC.29
-	218G8-45851		CHAIN,LEAF VFM270	ﾁｪｰﾝ	2	INC.29
-	218G8-45871		CHAIN,LEAF VFM275	ﾁｪｰﾝ	2	INC.29
-	218G8-45951		CHAIN,LEAF VFM300	ﾁｪｰﾝ	2	INC.29
-	218G8-46031		CHAIN,LEAF VFM325	ﾁｪｰﾝ	2	INC.29
-	218G8-46031		CHAIN,LEAF VFM330	ﾁｪｰﾝ	2	INC.29
-	218G8-46091		CHAIN,LEAF VFM350	ﾁｪｰﾝ	2	INC.29
-	218G8-46151		CHAIN,LEAF VFM366	ﾁｪｰﾝ	2	INC.29
-	218G8-46171		CHAIN,LEAF VFM370	ﾁｪｰﾝ	2	INC.29
-	218G8-46171		CHAIN,LEAF VFM375	ﾁｪｰﾝ	2	INC.29

FIG.196 LIFT CYLINDER (FRONT)[VFM0A7]

(M7010510) リフトシリンダ(フロント)

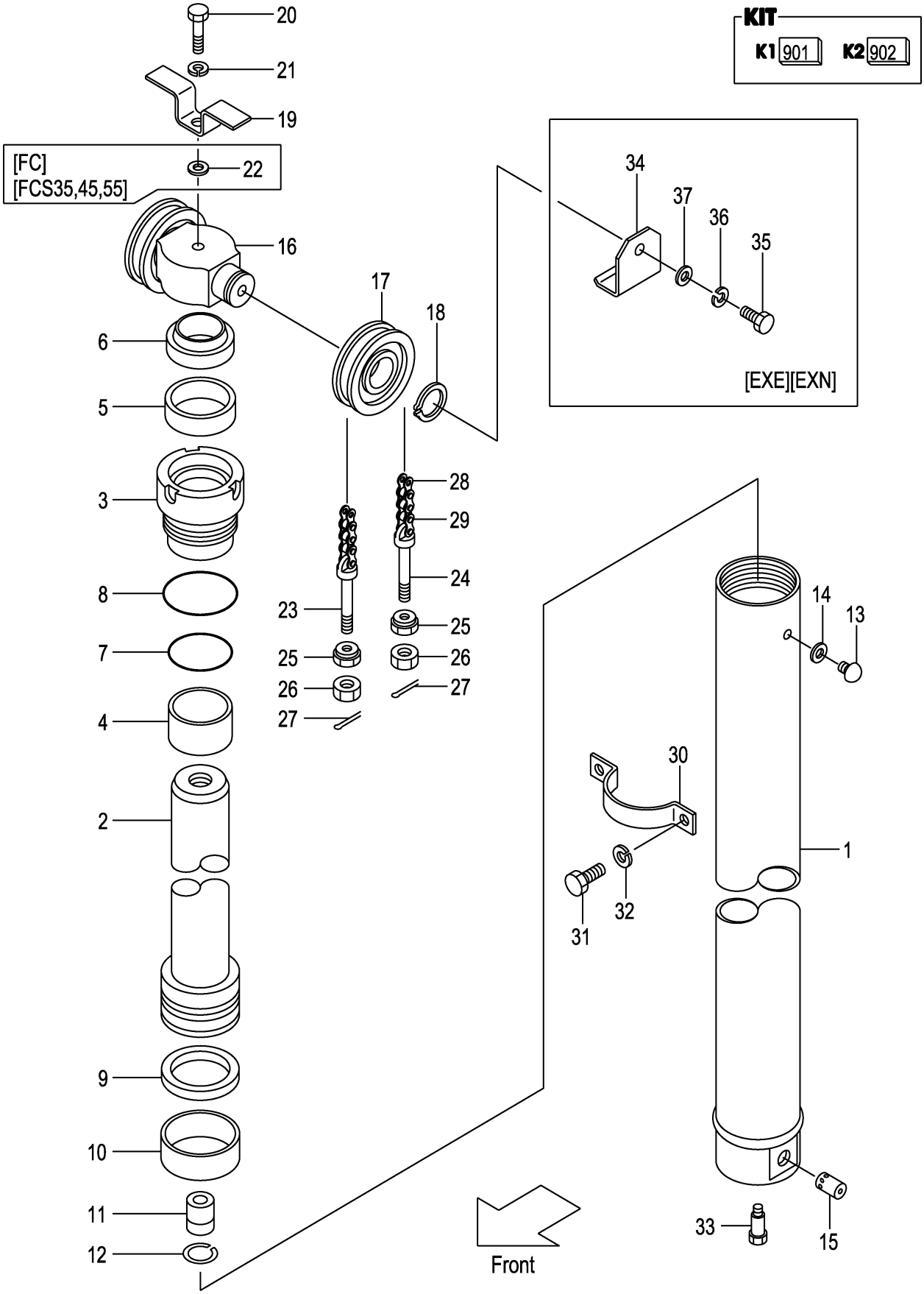

A:VFM0A7(1.0T)
B:VFM0A7(1.5T,1.8T)

Item No	Part No.	Mark	Description		Req'd	Remarks : Serial No.
-	218G8-46291		CHAIN,LEAF VFM400	ﾁｪｰﾝ	2	INC.29
-	218G8-46371		CHAIN,LEAF VFM425	ﾁｪｰﾝ	2	INC.29
-	218G8-46451		CHAIN,LEAF VFM450	ﾁｪｰﾝ	2	INC.29
-	218G8-46531		CHAIN,LEAF VFM475	ﾁｪｰﾝ	2	INC.29
-	218G8-46611		CHAIN,LEAF VFM500	ﾁｪｰﾝ	2	INC.29
-	218G8-46791		CHAIN,LEAF VFM550	ﾁｪｰﾝ	2	INC.29
-	218G8-46951		CHAIN,LEAF VFM600	ﾁｪｰﾝ	2	INC.29
-	09001-08041		CHAIN,ROLLER VFM200	ﾁｪｰﾝ	2	[FC][FCS35][FCS55][FCS45]
-	09001-08047		CHAIN,ROLLER VFM225	ﾁｪｰﾝ	2	[FC][FCS35][FCS55][FCS45]
-	09001-08051		CHAIN,ROLLER VFM250	ﾁｪｰﾝ	2	[FC][FCS35][FCS55][FCS45]
-	09001-08055		CHAIN,ROLLER VFM270	ﾁｪｰﾝ	2	[FC][FCS35][FCS55][FCS45]
-	09001-08057		CHAIN,ROLLER VFM275	ﾁｪｰﾝ	2	[FC][FCS35][FCS55][FCS45]
-	09001-08061		CHAIN,ROLLER VFM300	ﾁｪｰﾝ	2	[FC][FCS35][FCS55][FCS45]
-	09001-08067		CHAIN,ROLLER VFM325	ﾁｪｰﾝ	2	[FC][FCS35][FCS55][FCS45]
-	09001-08067		CHAIN,ROLLER VFM330	ﾁｪｰﾝ	2	[FC][FCS35][FCS55][FCS45]
-	09001-08071		CHAIN,ROLLER VFM350	ﾁｪｰﾝ	2	[FC][FCS35][FCS55][FCS45]
-	09001-08075		CHAIN,ROLLER VFM366	ﾁｪｰﾝ	2	[FC][FCS35][FCS55][FCS45]
-	09001-08075		CHAIN,ROLLER VFM370	ﾁｪｰﾝ	2	[FC][FCS35][FCS55][FCS45]
-	09001-08077		CHAIN,ROLLER VFM375	ﾁｪｰﾝ	2	[FC][FCS35][FCS55][FCS45]
-	09001-08083		CHAIN,ROLLER VFM400	ﾁｪｰﾝ	2	[FC][FCS35][FCS55][FCS45]
-	09001-08089		CHAIN,ROLLER VFM425	ﾁｪｰﾝ	2	[FC][FCS35][FCS55][FCS45]
-	09001-08093		CHAIN,ROLLER VFM450	ﾁｪｰﾝ	2	[FC][FCS35][FCS55][FCS45]
-	09001-08097		CHAIN,ROLLER VFM475	ﾁｪｰﾝ	2	[FC][FCS35][FCS55][FCS45]
-	09001-08103		CHAIN,ROLLER VFM500	ﾁｪｰﾝ	2	[FC][FCS35][FCS55][FCS45]
-	09001-08115		CHAIN,ROLLER VFM550	ﾁｪｰﾝ	2	[FC][FCS35][FCS55][FCS45]
-	09001-08125		CHAIN,ROLLER VFM600	ﾁｪｰﾝ	2	[FC][FCS35][FCS55][FCS45]
29	218G8-42701		LINK	ﾘﾝｸ	4	
30	212R0-83011		SUPPORT,CYLINDER	ｻﾎﾟｰﾄ	1	
31	01103-10020		BOLT	ﾎﾞﾙﾄ	2	
32	02011-00010		WASHER	ﾜｯｼｬ	2	
33	214A0-82831		BOLT	ﾎﾞﾙﾄ	1	
34	57393-02041		COVER,CHAIN	ｶﾊﾞｰ	2	[EXE][EXN]
35	01100-16016		BOLT	ﾎﾞﾙﾄ	2	[EXE][EXN]
36	02010-00016		WASHER	ﾜｯｼｬ	2	[EXE][EXN]
37	02000-00016		WASHER	ﾜｯｼｬ	2	[EXE][EXN]

FIG.197 LIFT CYLINDER (REAR)[VFM0A7]

(M7010520) リフトシリンダ(リヤー)

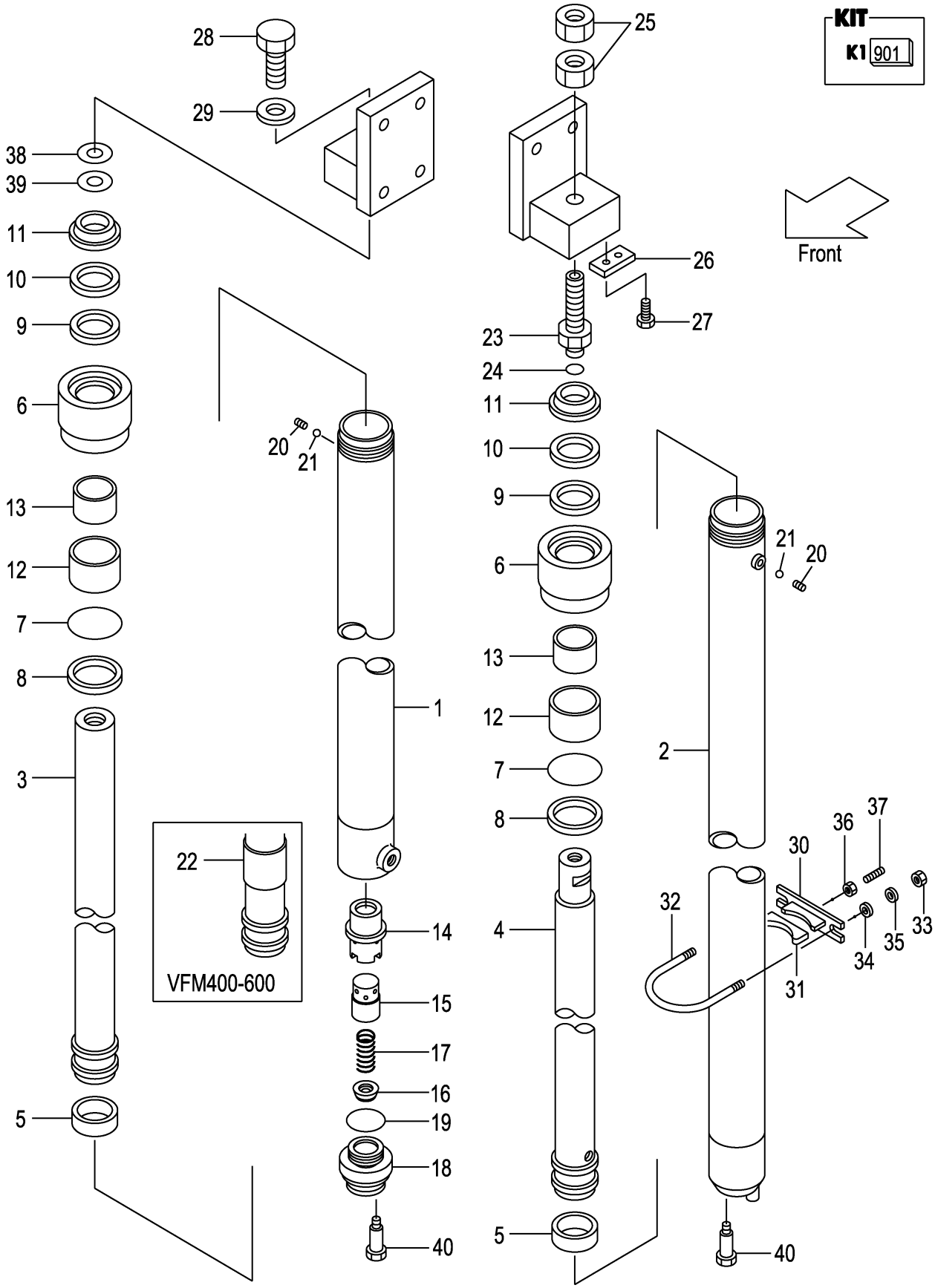

A:VFMOA7(1.0T)
B:VFMOA7(1.5T,1.8T)

Item No	Part No.	Mark	Description		Req'd	Remarks : Serial No.
A1	216G0-50211		CYL-ASSY,RH VFM200	ｼﾘﾝﾀﾞｱｯｾﾝ	1	INC.1,3,5-21
-	216G0-50221		CYL-ASSY,RH VFM225	ｼﾘﾝﾀﾞｱｯｾﾝ	1	INC.1,3,5-21
-	216G0-50231		CYL-ASSY,RH VFM250	ｼﾘﾝﾀﾞｱｯｾﾝ	1	INC.1,3,5-21
-	216G0-50241		CYL-ASSY,RH VFM270	ｼﾘﾝﾀﾞｱｯｾﾝ	1	INC.1,3,5-21
-	216G0-50251		CYL-ASSY,RH VFM275	ｼﾘﾝﾀﾞｱｯｾﾝ	1	INC.1,3,5-21
-	216G0-50201		CYL-ASSY,RH VFM300	ｼﾘﾝﾀﾞｱｯｾﾝ	1	INC.1,3,5-21
-	216G0-50261		CYL-ASSY,RH VFM325	ｼﾘﾝﾀﾞｱｯｾﾝ	1	INC.1,3,5-21
-	216G0-50271		CYL-ASSY,RH VFM330	ｼﾘﾝﾀﾞｱｯｾﾝ	1	INC.1,3,5-21
-	216G0-50281		CYL-ASSY,RH VFM350	ｼﾘﾝﾀﾞｱｯｾﾝ	1	INC.1,3,5-21
-	216G0-50291		CYL-ASSY,RH VFM366	ｼﾘﾝﾀﾞｱｯｾﾝ	1	INC.1,3,5-21
-	216G0-50301		CYL-ASSY,RH VFM370	ｼﾘﾝﾀﾞｱｯｾﾝ	1	INC.1,3,5-21
-	216G0-50311		CYL-ASSY,RH VFM375	ｼﾘﾝﾀﾞｱｯｾﾝ	1	INC.1,3,5-21
-	216G0-50321		CYL-ASSY,RH VFM400	ｼﾘﾝﾀﾞｱｯｾﾝ	1	INC.1,3,5-22
-	216G0-50331		CYL-ASSY,RH VFM425	ｼﾘﾝﾀﾞｱｯｾﾝ	1	INC.1,3,5-22
-	216G0-50341		CYL-ASSY,RH VFM450	ｼﾘﾝﾀﾞｱｯｾﾝ	1	INC.1,3,5-22
-	216G0-50351		CYL-ASSY,RH VFM475	ｼﾘﾝﾀﾞｱｯｾﾝ	1	INC.1,3,5-22
-	216G0-50361		CYL-ASSY,RH VFM500	ｼﾘﾝﾀﾞｱｯｾﾝ	1	INC.1,3,5-22
-	216G0-50371		CYL-ASSY,RH VFM550	ｼﾘﾝﾀﾞｱｯｾﾝ	1	INC.1,3,5-22
-	216G0-50381		CYL-ASSY,RH VFM600	ｼﾘﾝﾀﾞｱｯｾﾝ	1	INC.1,3,5-22
A2	216G0-50411		CYL-ASSY,LH VFM200	ｼﾘﾝﾀﾞｱｯｾﾝ	1	INC.2,4-13,20-21,23,24
-	216G0-50421		CYL-ASSY,LH VFM225	ｼﾘﾝﾀﾞｱｯｾﾝ	1	INC.2,4-13,20-21,23,24
-	216G0-50431		CYL-ASSY,LH VFM250	ｼﾘﾝﾀﾞｱｯｾﾝ	1	INC.2,4-13,20-21,23,24
-	216G0-50441		CYL-ASSY,LH VFM270	ｼﾘﾝﾀﾞｱｯｾﾝ	1	INC.2,4-13,20-21,23,24
-	216G0-50451		CYL-ASSY,LH VFM275	ｼﾘﾝﾀﾞｱｯｾﾝ	1	INC.2,4-13,20-21,23,24
-	216G0-50401		CYL-ASSY,LH VFM300	ｼﾘﾝﾀﾞｱｯｾﾝ	1	INC.2,4-13,20-21,23,24
-	216G0-50461		CYL-ASSY,LH VFM325	ｼﾘﾝﾀﾞｱｯｾﾝ	1	INC.2,4-13,20-21,23,24
-	216G0-50471		CYL-ASSY,LH VFM330	ｼﾘﾝﾀﾞｱｯｾﾝ	1	INC.2,4-13,20-21,23,24
-	216G0-50481		CYL-ASSY,LH VFM350	ｼﾘﾝﾀﾞｱｯｾﾝ	1	INC.2,4-13,20-21,23,24
-	216G0-50491		CYL-ASSY,LH VFM366	ｼﾘﾝﾀﾞｱｯｾﾝ	1	INC.2,4-13,20-21,23,24
-	216G0-50501		CYL-ASSY,LH VFM370	ｼﾘﾝﾀﾞｱｯｾﾝ	1	INC.2,4-13,20-21,23,24
-	216G0-50511		CYL-ASSY,LH VFM375	ｼﾘﾝﾀﾞｱｯｾﾝ	1	INC.2,4-13,20-21,23,24
-	216G0-50521		CYL-ASSY,LH VFM400	ｼﾘﾝﾀﾞｱｯｾﾝ	1	INC.2,4-13,20-24
-	216G0-50531		CYL-ASSY,LH VFM425	ｼﾘﾝﾀﾞｱｯｾﾝ	1	INC.2,4-13,20-24
-	216G0-50541		CYL-ASSY,LH VFM450	ｼﾘﾝﾀﾞｱｯｾﾝ	1	INC.2,4-13,20-24
-	216G0-50551		CYL-ASSY,LH VFM475	ｼﾘﾝﾀﾞｱｯｾﾝ	1	INC.2,4-13,20-24
-	216G0-50561		CYL-ASSY,LH VFM500	ｼﾘﾝﾀﾞｱｯｾﾝ	1	INC.2,4-13,20-24
-	216G0-50571		CYL-ASSY,LH VFM550	ｼﾘﾝﾀﾞｱｯｾﾝ	1	INC.2,4-13,20-24
-	216G0-50581		CYL-ASSY,LH VFM600	ｼﾘﾝﾀﾞｱｯｾﾝ	1	INC.2,4-13,20-24
901	216G0-59801	K1	KIT,OVERHAUL	ｵｰﾊﾞﾎｰﾙｷｯﾄ	2	INC.5,7-11,19
1	216G0-50611		BODY,CYL,RH VFM200	ﾎﾞﾃﾞｨ	1	
-	216G0-50621		BODY,CYL,RH VFM225	ﾎﾞﾃﾞｨ	1	
-	216G0-50631		BODY,CYL,RH VFM250	ﾎﾞﾃﾞｨ	1	
-	216G0-50641		BODY,CYL,RH VFM270	ﾎﾞﾃﾞｨ	1	
-	216G0-50651		BODY,CYL,RH VFM275	ﾎﾞﾃﾞｨ	1	
-	216G0-50601		BODY,CYL,RH VFM300	ﾎﾞﾃﾞｨ	1	
-	216G0-50661		BODY,CYL,RH VFM325	ﾎﾞﾃﾞｨ	1	
-	216G0-50671		BODY,CYL,RH VFM330	ﾎﾞﾃﾞｨ	1	
-	216G0-50681		BODY,CYL,RH VFM350	ﾎﾞﾃﾞｨ	1	
-	234A0-50601		BODY,CYL,RH VFM366	ﾎﾞﾃﾞｨ	1	
-	216G0-50701		BODY,CYL,RH VFM370	ﾎﾞﾃﾞｨ	1	

FIG.197 LIFT CYLINDER (REAR)[VFM0A7]

(M7010520) リフトシリンダ(リヤー)

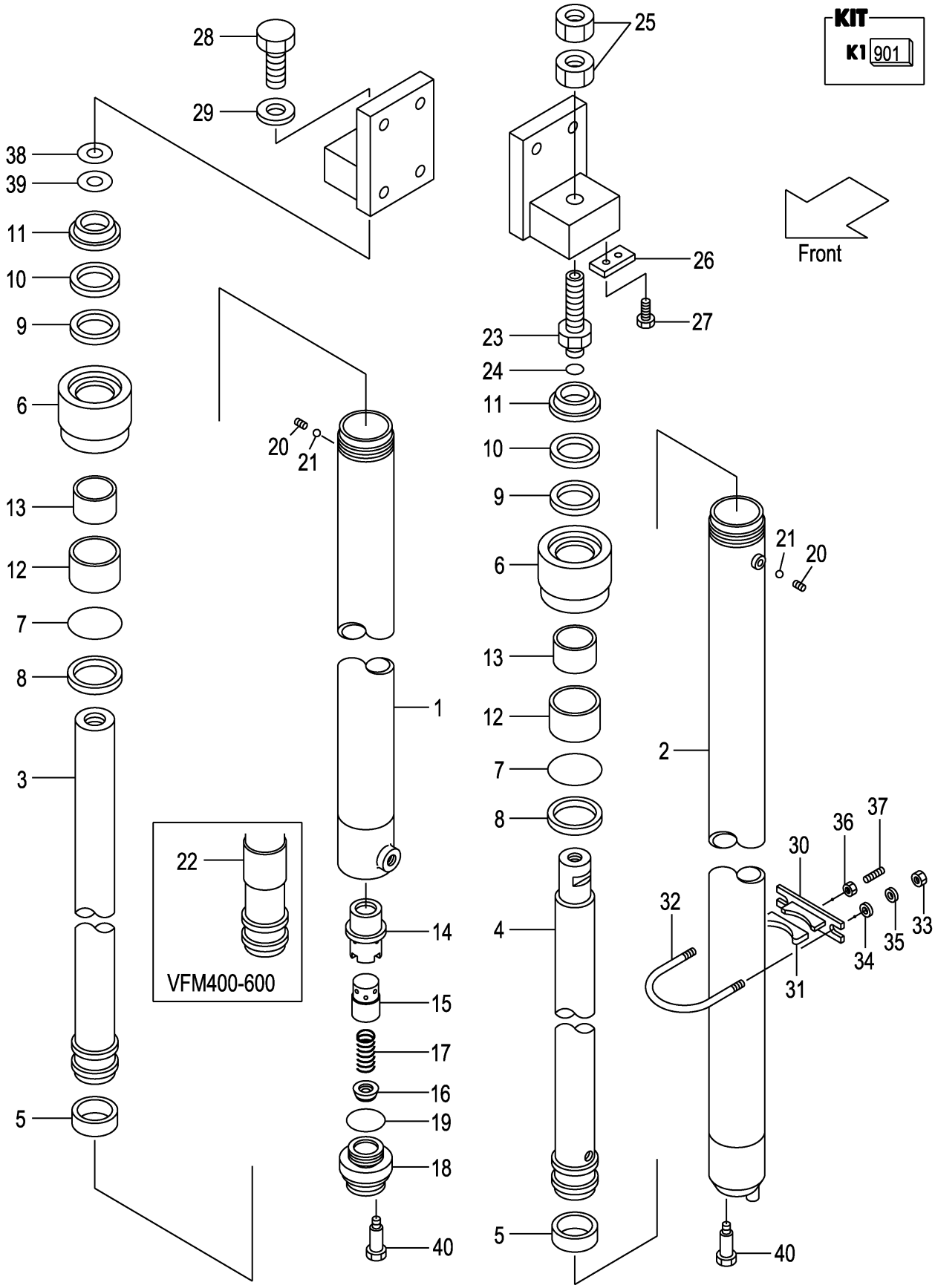

A:VFMOA7(1.0T)
B:VFMOA7(1.5T,1.8T)

Item No	Part No.	Mark	Description	Req'd	Remarks : Serial No.
-	216G0-50711		BODY,CYL,RH VFM375 ﾎﾞﾃﾞｨ	1	
-	216G0-50721		BODY,CYL,RH VFM400 ﾎﾞﾃﾞｨ	1	
-	216G0-50731		BODY,CYL,RH VFM425 ﾎﾞﾃﾞｨ	1	
-	216G0-50741		BODY,CYL,RH VFM450 ﾎﾞﾃﾞｨ	1	
-	216G0-50751		BODY,CYL,RH VFM475 ﾎﾞﾃﾞｨ	1	
-	216G0-50761		BODY,CYL,RH VFM500 ﾎﾞﾃﾞｨ	1	
-	216G0-50771		BODY,CYL,RH VFM550 ﾎﾞﾃﾞｨ	1	
-	216G0-50781		BODY,CYL,RH VFM600 ﾎﾞﾃﾞｨ	1	
2	216G0-50811		BODY,CYL,LH VFM200 ﾎﾞﾃﾞｨ	1	
-	216G0-50821		BODY,CYL,LH VFM225 ﾎﾞﾃﾞｨ	1	
-	216G0-50831		BODY,CYL,LH VFM250 ﾎﾞﾃﾞｨ	1	
-	216G0-50841		BODY,CYL,LH VFM270 ﾎﾞﾃﾞｨ	1	
-	216G0-50851		BODY,CYL,LH VFM275 ﾎﾞﾃﾞｨ	1	
-	216G0-50801		BODY,CYL,LH VFM300 ﾎﾞﾃﾞｨ	1	
-	216G0-50861		BODY,CYL,LH VFM325 ﾎﾞﾃﾞｨ	1	
-	216G0-50871		BODY,CYL,LH VFM330 ﾎﾞﾃﾞｨ	1	
-	216G0-50881		BODY,CYL,LH VFM350 ﾎﾞﾃﾞｨ	1	
-	234A0-50801		BODY,CYL,LH VFM366 ﾎﾞﾃﾞｨ	1	
-	216G0-50901		BODY,CYL,LH VFM370 ﾎﾞﾃﾞｨ	1	
-	216G0-50911		BODY,CYL,LH VFM375 ﾎﾞﾃﾞｨ	1	
-	216G0-50921		BODY,CYL,LH VFM400 ﾎﾞﾃﾞｨ	1	
-	216G0-50931		BODY,CYL,LH VFM425 ﾎﾞﾃﾞｨ	1	
-	216G0-50941		BODY,CYL,LH VFM450 ﾎﾞﾃﾞｨ	1	
-	216G0-50951		BODY,CYL,LH VFM475 ﾎﾞﾃﾞｨ	1	
-	216G0-50961		BODY,CYL,LH VFM500 ﾎﾞﾃﾞｨ	1	
-	216G0-50971		BODY,CYL,LH VFM550 ﾎﾞﾃﾞｨ	1	
-	216G0-50981		BODY,CYL,LH VFM600 ﾎﾞﾃﾞｨ	1	
3	211F0-51511		ROD,PISTON,RH VFM200 ﾛｯﾄﾞ	1	
-	211F0-51521		ROD,PISTON,RH VFM225 ﾛｯﾄﾞ	1	
-	211F0-51531		ROD,PISTON,RH VFM250 ﾛｯﾄﾞ	1	
-	211F0-51541		ROD,PISTON,RH VFM270 ﾛｯﾄﾞ	1	
-	211F0-51551		ROD,PISTON,RH VFM275 ﾛｯﾄﾞ	1	
-	211F0-51501		ROD,PISTON,RH VFM300 ﾛｯﾄﾞ	1	
-	211F0-51561		ROD,PISTON,RH VFM325 ﾛｯﾄﾞ	1	
-	211F0-51571		ROD,PISTON,RH VFM330 ﾛｯﾄﾞ	1	
-	211F0-51581		ROD,PISTON,RH VFM350 ﾛｯﾄﾞ	1	
-	211F0-51591		ROD,PISTON,RH VFM366 ﾛｯﾄﾞ	1	
-	211F0-51601		ROD,PISTON,RH VFM370 ﾛｯﾄﾞ	1	
-	211F0-51611		ROD,PISTON,RH VFM375 ﾛｯﾄﾞ	1	
-	211F0-51621		ROD,PISTON,RH VFM400 ﾛｯﾄﾞ	1	
-	211F0-51631		ROD,PISTON,RH VFM425 ﾛｯﾄﾞ	1	
-	211F0-51641		ROD,PISTON,RH VFM450 ﾛｯﾄﾞ	1	
-	211F0-51651		ROD,PISTON,RH VFM475 ﾛｯﾄﾞ	1	
-	211F0-51661		ROD,PISTON,RH VFM500 ﾛｯﾄﾞ	1	
-	211F0-51671		ROD,PISTON,RH VFM550 ﾛｯﾄﾞ	1	
-	211F0-51681		ROD,PISTON,RH VFM600 ﾛｯﾄﾞ	1	
4	211F0-51711		ROD,PISTON,LH VFM200 ﾛｯﾄﾞ	1	
-	211F0-51721		ROD,PISTON,LH VFM225 ﾛｯﾄﾞ	1	
-	211F0-51731		ROD,PISTON,LH VFM250 ﾛｯﾄﾞ	1	
-	211F0-51741		ROD,PISTON,LH VFM270 ﾛｯﾄﾞ	1	

FIG.197 LIFT CYLINDER (REAR)[VFM0A7]

(M7010520) リフトシリンダ(リヤー)

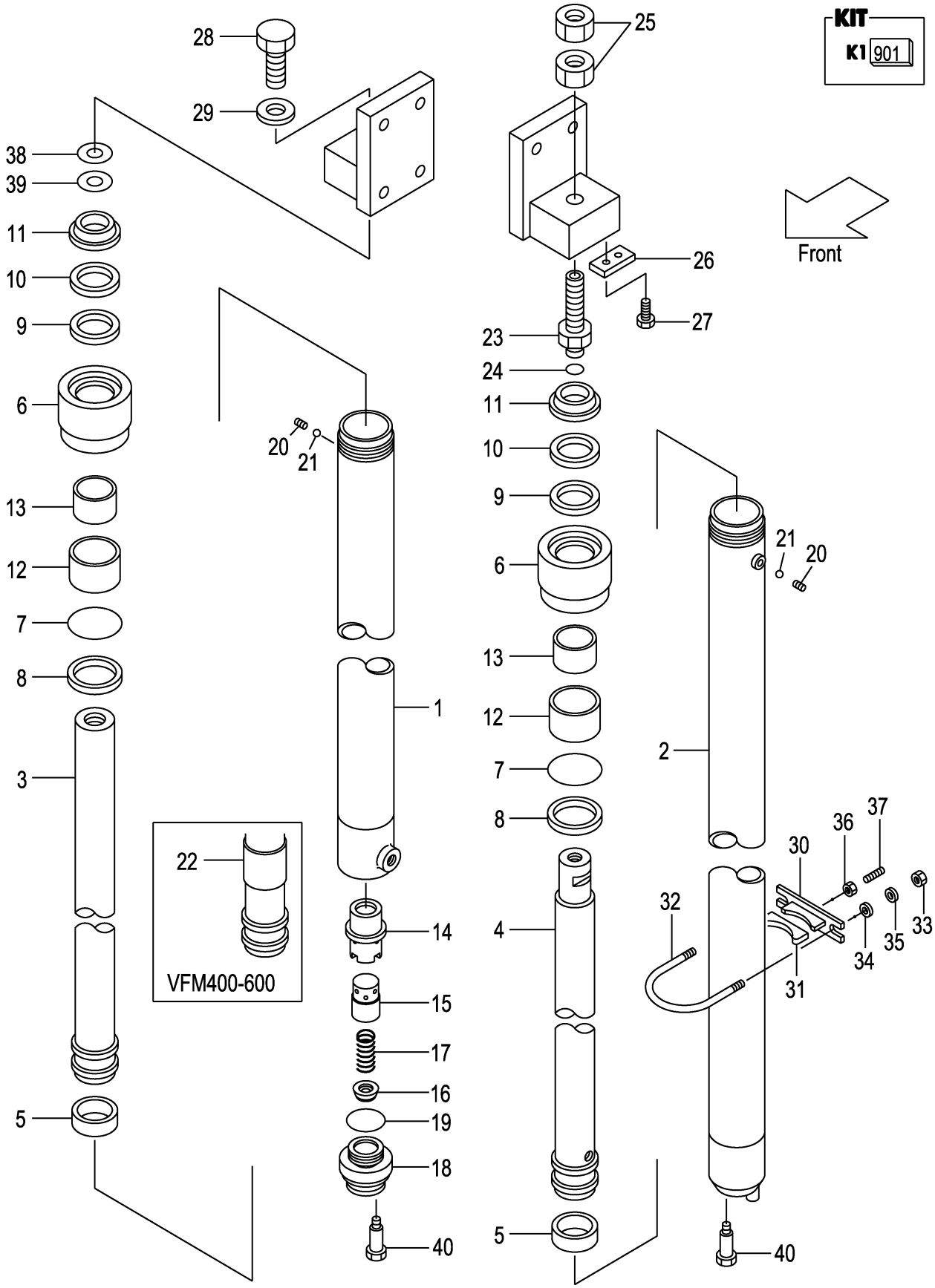

A:VFM0A7(1.0T)
B:VFM0A7(1.5T,1.8T)

Item No	Part No.	Mark	Description		Req'd	Remarks : Serial No.
-	211F0-51751		ROD,PISTON,LH VFM275	ﾛｯﾄﾞ	1	
-	211F0-51701		ROD,PISTON,LH VFM300	ﾛｯﾄﾞ	1	
-	211F0-51761		ROD,PISTON,LH VFM325	ﾛｯﾄﾞ	1	
-	211F0-51771		ROD,PISTON,LH VFM330	ﾛｯﾄﾞ	1	
-	211F0-51781		ROD,PISTON,LH VFM350	ﾛｯﾄﾞ	1	
-	211F0-51791		ROD,PISTON,LH VFM366	ﾛｯﾄﾞ	1	
-	211F0-51801		ROD,PISTON,LH VFM370	ﾛｯﾄﾞ	1	
-	211F0-51811		ROD,PISTON,LH VFM375	ﾛｯﾄﾞ	1	
-	211F0-51821		ROD,PISTON,LH VFM400	ﾛｯﾄﾞ	1	
-	211F0-51831		ROD,PISTON,LH VFM425	ﾛｯﾄﾞ	1	
-	211F0-51841		ROD,PISTON,LH VFM450	ﾛｯﾄﾞ	1	
-	211F0-51851		ROD,PISTON,LH VFM475	ﾛｯﾄﾞ	1	
-	211F0-51861		ROD,PISTON,LH VFM500	ﾛｯﾄﾞ	1	
-	211F0-51871		ROD,PISTON,LH VFM550	ﾛｯﾄﾞ	1	
-	211F0-51881		ROD,PISTON,LH VFM600	ﾛｯﾄﾞ	1	
5	22580-53321	*	WEARING	ｳｴｱﾘﾝｸﾞ	2	
6	216G0-53011		CAP,CYL	ｷｬｯﾌﾟ	2	
7	210F8-42631	*	O-RING	Oﾘﾝｸﾞ	2	
8	214A0-53681	*	RING,BACK-UP	ﾘﾝｸﾞ	2	
9	23658-52051	*	PACKING	ﾊﾟｯｷﾝｸﾞ	2	
10	23658-52061	*	RING,BACK-UP	ﾘﾝｸﾞ	2	
11	210F0-53691	*	SEAL	ｼｰﾙ	2	
A3	216G0-53051		SLEEVE-ASSY	ｽﾘｰﾌﾞｱｯｾﾝ	2	INC.12,13
12	216G0-53061		SLEEVE	ｽﾘｰﾌﾞ	2	
13	22678-52021		BUSHING	ﾌﾞｯｼﾝｸﾞ	2	
14	53658-43021		SLEEVE	ｽﾘｰﾌﾞ	1	(RH)
15	53658-43011		PISTON	ﾋﾟｽﾄﾝ	1	(RH)
16	53658-43001		VALVE,CHECK	ﾊﾞﾙﾌﾞ	1	(RH)
17	53658-43031		SPRING	ｽﾌﾟﾘﾝｸﾞ	1	(RH)
18	53658-43041		PLUG	ﾌﾟﾗｸﾞ	1	(RH)
19	03320-00340	*	O-RING	Oﾘﾝｸﾞ	1	(RH)
20	234A0-52611		PLUG	ﾌﾟﾗｸﾞ	2	
21	03190-00006		BALL	ﾎﾞｰﾙ	2	
22	210F0-53701		SPACER	ｽﾍﾟｰｻ	2	(VFM400-500)
-	210F0-53701		SPACER	ｽﾍﾟｰｻ	4	(VFM550-600)
23	23200-50811		NIPPLE	ﾆｯﾌﾟﾙ	1	(LH)
24	03320-00180		O-RING	Oﾘﾝｸﾞ	1	(LH)
25	23200-50841		NUT	ﾅｯﾄ	2	(LH)
26	23648-50161		PLATE,KEY	ﾌﾟﾚｰﾄ	1	(LH)
27	01184-10020		BOLT & WASHER	ﾎﾞﾙﾄ&ﾜｯｼｬ	2	(LH)
28	01103-14040		BOLT	ﾎﾞﾙﾄ	1	(RH)
29	02011-00014		WASHER	ﾜｯｼｬ	1	(RH)
A4	215E8-42171		SUPPORT-ASSY	ｻﾎﾟｰﾄｱｯｾﾝ	2	(VFM200-375) INC.30,31
-	215E8-42171		SUPPORT-ASSY	ｻﾎﾟｰﾄｱｯｾﾝ	4	(VFM400-600) INC.30,31
30	215E8-42181		SUPPORT	ｻﾎﾟｰﾄ	2	(VFM200-375)
-	215E8-42181		SUPPORT	ｻﾎﾟｰﾄ	4	(VFM400-600)
31	24868-42111		RUBBER	ﾗﾊﾞｰ	2	(VFM200-375)
-	24868-42111		RUBBER	ﾗﾊﾞｰ	4	(VFM400-600)
32	216G8-43161		U-BOLT	Uﾎﾞﾙﾄ	2	(VFM200-375)
-	216G8-43161		U-BOLT	Uﾎﾞﾙﾄ	4	(VFM400-600)

FIG.197 LIFT CYLINDER (REAR)[VFM0A7]

(M7010520) リフトシリンダ(リヤー)

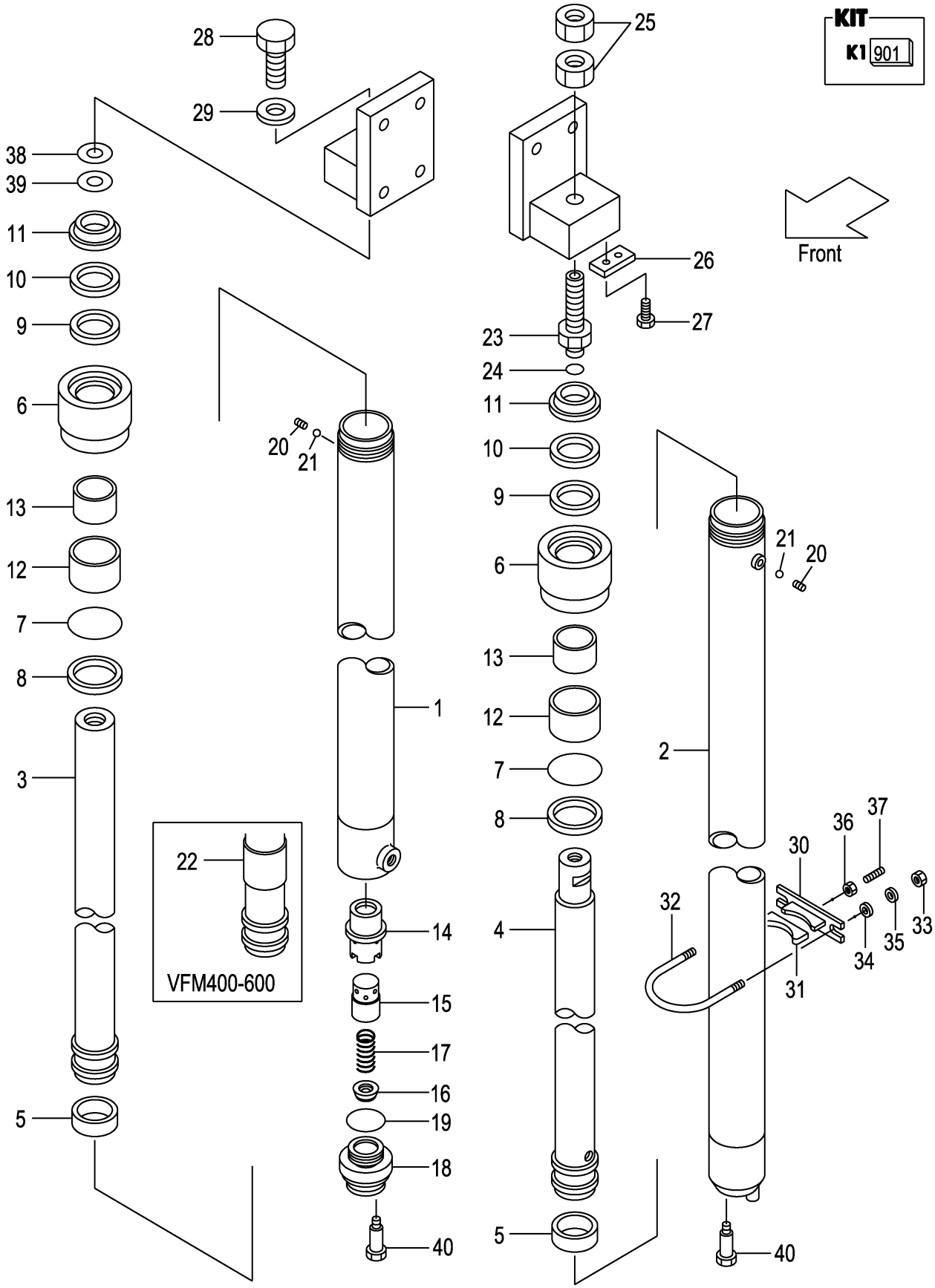

A:VFM0A7(1.0T)
B:VFM0A7(1.5T,1.8T)

Item No	Part No.	Mark	Description		Req'd	Remarks : Serial No.
33	234A8-42561		NUT	ﾅｯﾄ	4	(VFM200-375)
-	234A8-42561		NUT	ﾅｯﾄ	8	(VFM400-600)
34	02000-20010		WASHER	ﾜｯｼｬ	4	(VFM200-375)
-	02000-20010		WASHER	ﾜｯｼｬ	8	(VFM400-600)
35	02010-20010		WASHER	ﾜｯｼｬ	4	(VFM200-375)
-	02010-20010		WASHER	ﾜｯｼｬ	8	(VFM400-600)
36	234A8-42571		NUT	ﾅｯﾄ	2	(VFM200-375)
-	234A8-42571		NUT	ﾅｯﾄ	4	(VFM400-600)
37	215E8-42231		BOLT	ﾎﾞﾙﾄ	2	(VFM200-375)
-	215E8-42231		BOLT	ﾎﾞﾙﾄ	4	(VFM400-600)
38	23917-42191		SHIM,T-1.0	ｼﾑ	5	(RH)
39	22679-43831		SHIM,T-0.2	ｼﾑ	5	(RH)
40	214A8-42661		BOLT	ﾎﾞﾙﾄ	2	

FIG.198 MAST PIPING [VFM0A7]

(M7010530) マストパイピング

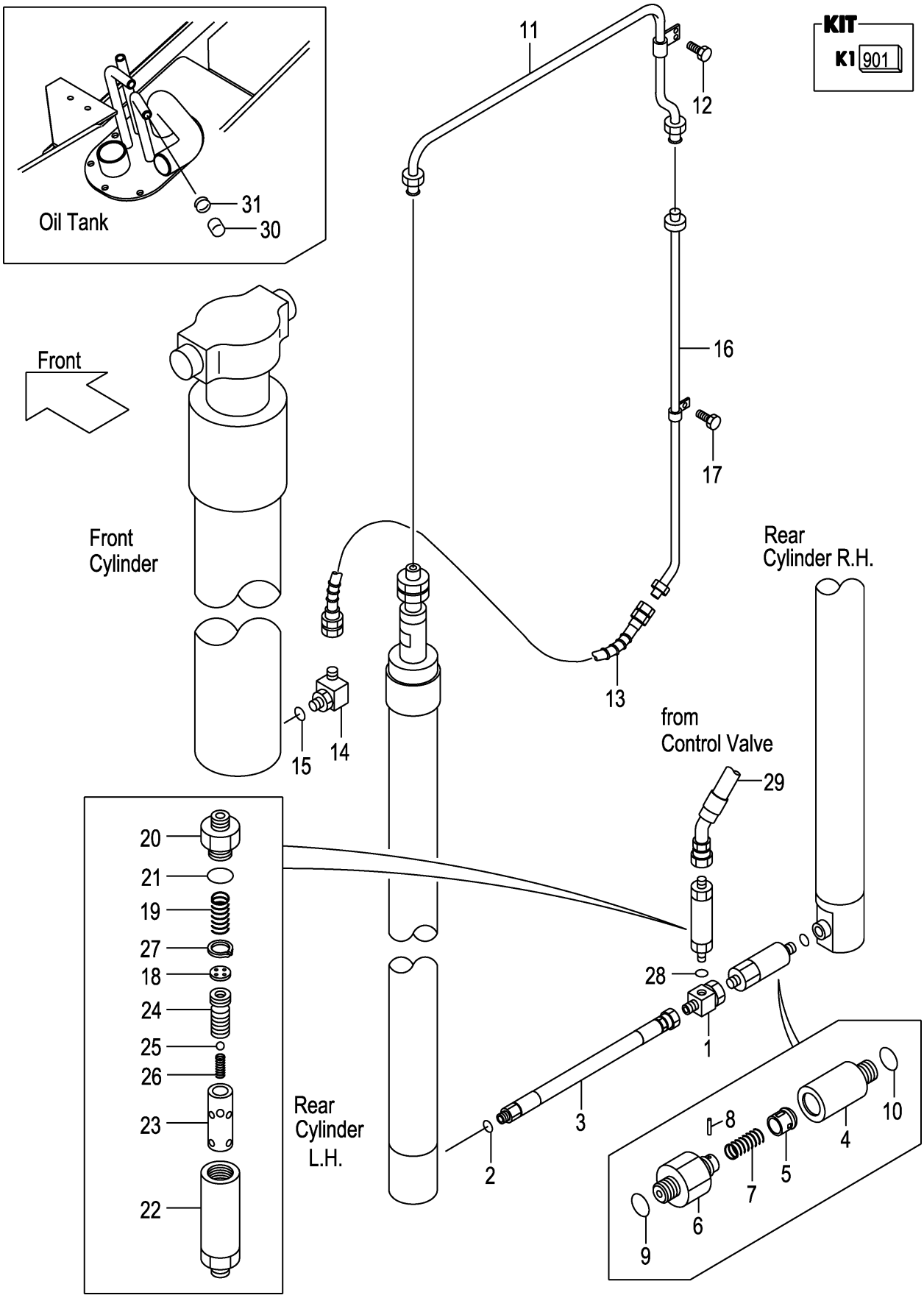

A:VFM0A7(1.0T)
B:VFM0A7(1.5T,1.8T)

Item No	Part No.	Mark	Description		Req'd	Remarks : Serial No.
901	216G0-59801	K1	KIT,OVERHAUL	ｵｰﾊﾞﾎｰﾙｷｯﾄ	1	INC.2,10&FIG.197:5,7-11,19
1	234A0-62101		THREE-WAY	ｽﾘｰｳｴｲ	1	
2	03320-00140		O-RING	Oﾘﾝｸﾞ	1	
3	277H0-62101		HOSE	ﾎｰｽ	1	
A1	277H0-63001		VALVE-ASSY,CUT	ｶｯﾄﾊﾞﾙﾌﾞｱｯｾﾝ	1	INC.4-10
4	277H0-62111		ADAPTER	ｱﾀﾞﾌﾟﾀ	1	
A2	216G0-93201		VALVE-SUB-ASSY,CUT	ｶｯﾄﾊﾞﾙﾌﾞｻﾌﾞｱｯｾﾝ	1	INC.5-9
5	NO PART NO.	#	PISTON	ﾋﾟｽﾄﾝ	1	
6	NO PART NO.	#	NIPPLE	ﾆｯﾌﾟﾙ	1	
7	234A8-42611		SPRING	ｽﾌﾟﾘﾝｸﾞ	1	
8	02270-01014		PIN	ﾋﾟﾝ	1	
9	03320-00140		O-RING	Oﾘﾝｸﾞ	1	
10	03320-00140		O-RING	Oﾘﾝｸﾞ	1	
11	211F0-62301		PIPE	ﾊﾟｲﾌﾟ	1	
12	01183-06016		BOLT & WASHER	ﾎﾞﾙﾄ&ﾜｯｼｬ	2	
13	214A0-62151		HOSE	ﾎｰｽ	1	
A3	212R0-91301		ELBOW-ASSY	ｴﾙﾎﾞｱｯｾﾝ	1	INC.14,15
14	NO PART NO.	#	ELBOW	ｴﾙﾎﾞ	1	
15	03320-00180		O-RING	Oﾘﾝｸﾞ	1	
16	210F0-60211		PIPE VFM200	ﾊﾟｲﾌﾟ	1	
-	210F0-60221		PIPE VFM225	ﾊﾟｲﾌﾟ	1	
-	210F0-60231		PIPE VFM250	ﾊﾟｲﾌﾟ	1	
-	210F0-60241		PIPE VFM270	ﾊﾟｲﾌﾟ	1	
-	210F0-60251		PIPE VFM275	ﾊﾟｲﾌﾟ	1	
-	210F0-60201		PIPE VFM300	ﾊﾟｲﾌﾟ	1	
-	210F0-60261		PIPE VFM325	ﾊﾟｲﾌﾟ	1	
-	210F0-60271		PIPE VFM330	ﾊﾟｲﾌﾟ	1	
-	210F0-60281		PIPE VFM350	ﾊﾟｲﾌﾟ	1	
-	210F0-60291		PIPE VFM366	ﾊﾟｲﾌﾟ	1	
-	210F0-60301		PIPE VFM370	ﾊﾟｲﾌﾟ	1	
-	210F0-60311		PIPE VFM375	ﾊﾟｲﾌﾟ	1	
-	210F0-60321		PIPE VFM400	ﾊﾟｲﾌﾟ	1	
-	210F0-60331		PIPE VFM425	ﾊﾟｲﾌﾟ	1	
-	210F0-60341		PIPE VFM450	ﾊﾟｲﾌﾟ	1	
-	210F0-60351		PIPE VFM475	ﾊﾟｲﾌﾟ	1	
-	210F0-60361		PIPE VFM500	ﾊﾟｲﾌﾟ	1	
-	210F0-60371		PIPE VFM550	ﾊﾟｲﾌﾟ	1	
-	210F0-60381		PIPE VFM600	ﾊﾟｲﾌﾟ	1	
17	01183-06016		BOLT & WASHER	ﾎﾞﾙﾄ&ﾜｯｼｬ	1	(VFM200-375)
-	01183-06016		BOLT & WASHER	ﾎﾞﾙﾄ&ﾜｯｼｬ	2	(VFM400-500)
-	01183-06016		BOLT & WASHER	ﾎﾞﾙﾄ&ﾜｯｼｬ	3	(VFM550-600)
A4	216G8-41001		REGULATOR-ASSY	ﾚｷﾞｭﾚｰﾀｱｯｾﾝ	1	INC.18-27
18	NO PART NO.	#	PLATE	ﾌﾟﾚｰﾄ	1	
19	27979-43101		SPRING	ｽﾌﾟﾘﾝｸﾞ	1	
20	NO PART NO.	#	NIPPLE	ﾆｯﾌﾟﾙ	1	
21	03300-00280		O-RING	Oﾘﾝｸﾞ	1	
22	NO PART NO.	#	CASE	ｹｰｽ	1	
23	NO PART NO.	#	SLEEVE	ｽﾘｰﾌﾞ	1	
24	NO PART NO.	#	PISTON	ﾋﾟｽﾄﾝ	1	
25	24459-42951		BALL,NYLON	ﾎﾞｰﾙ	1	

FIG.198 MAST PIPING [VFM0A7]

(M7010530) マストパイピング

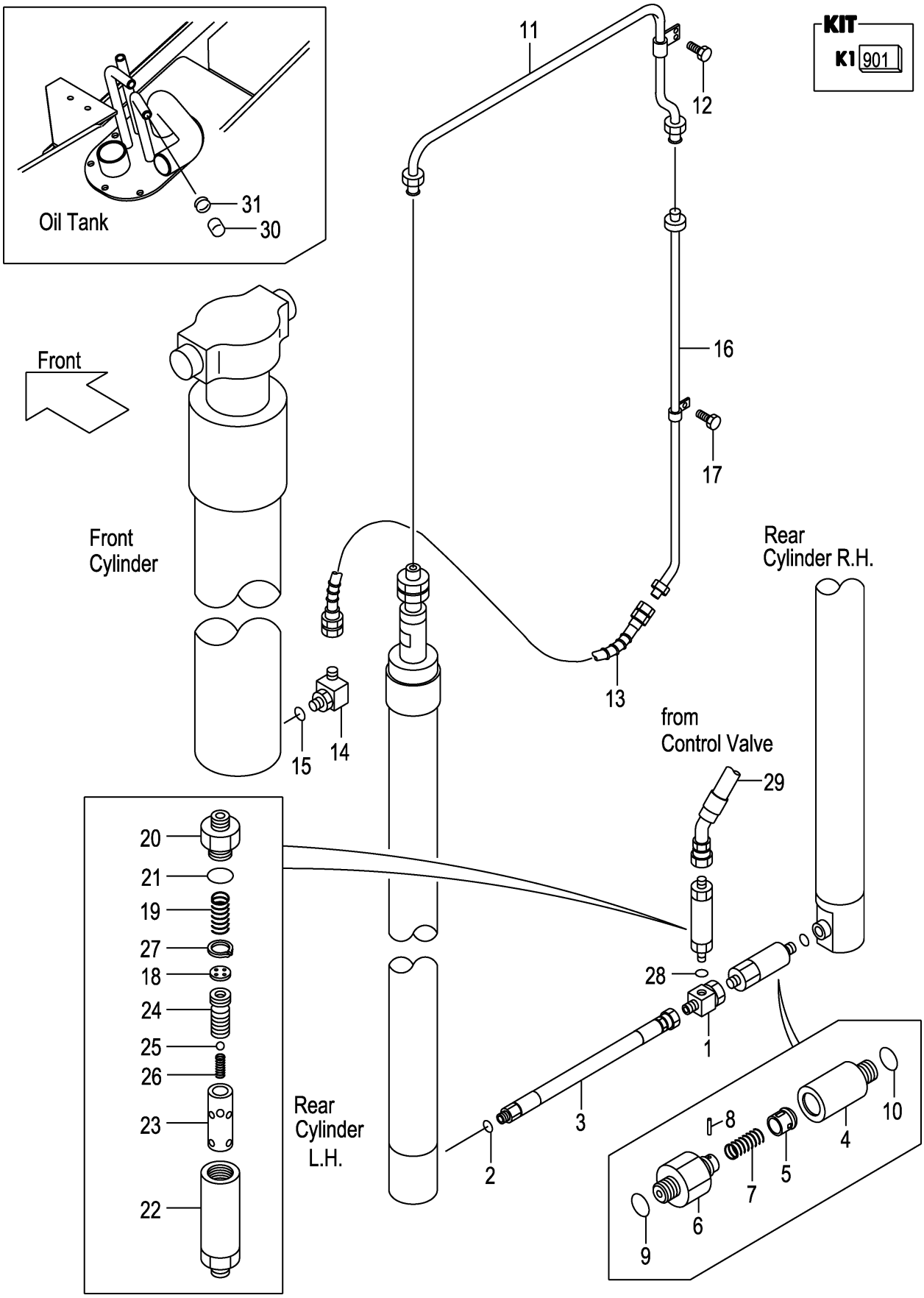

A:VFMOA7(1.0T)
B:VFMOA7(1.5T,1.8T)

Item No	Part No.	Mark	Description		Req'd	Remarks : Serial No.
26	214A8-44151		SPRING	ｽﾌﾟﾘﾝｸﾞ	1	
27	02110-00018		RING,SNAP	ﾘﾝｸﾞ	1	
28	03320-00180		O-RING	Oﾘﾝｸﾞ	1	
29	216G8-02502		HOSE	ﾎｰｽ	1	
30	55593-62551		CAP	ｷｬｯﾌﾟ	1	
31	04914-00019		CLIP	ｸﾘｯﾌﾟ	1	

FIG.199 FORK [VFHM0A7]

(M7018130) フォーク

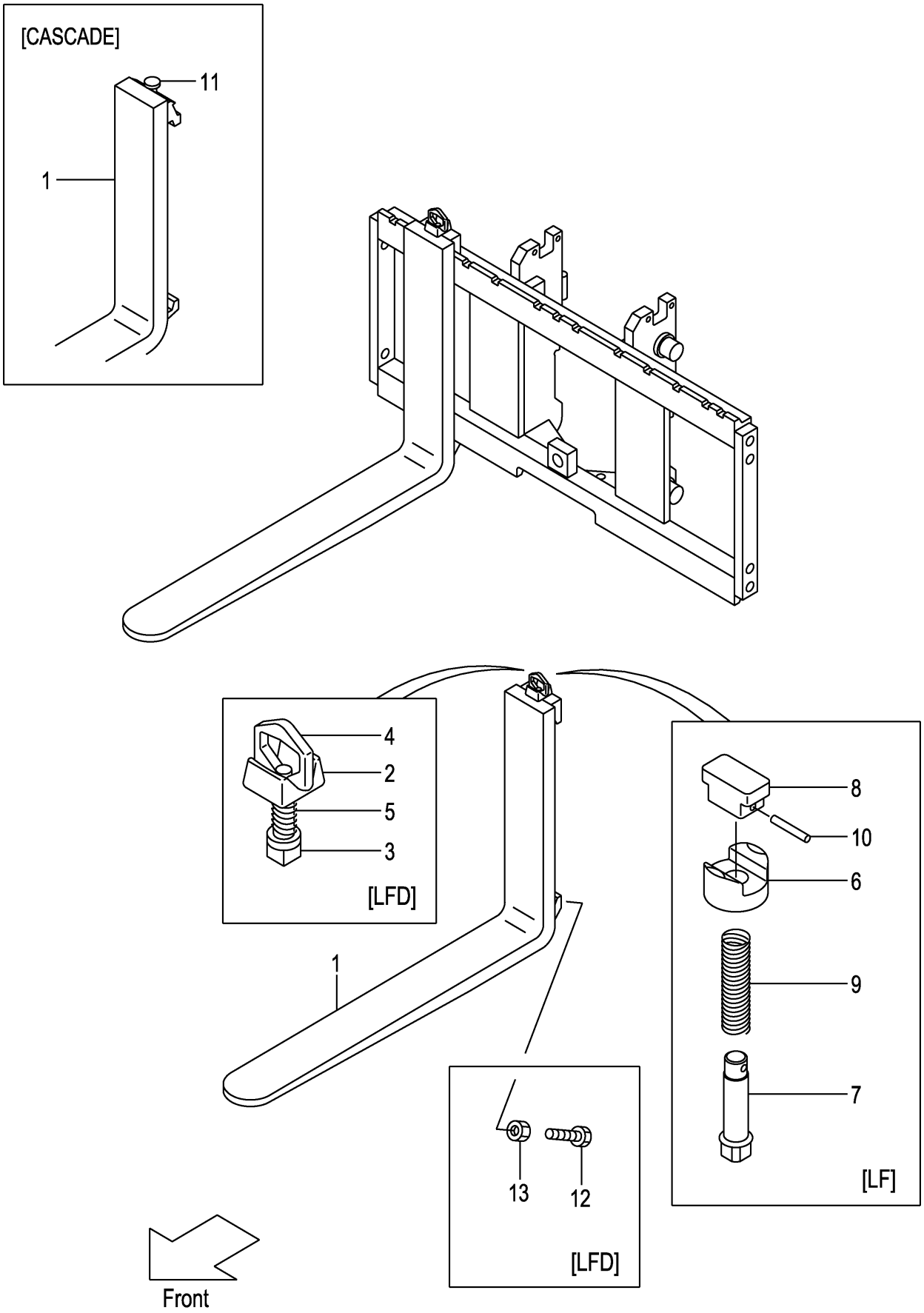

A:VFHM0A7(1.0T)
B:VFHM0A7(1.5T)
C:VFHM0A7(1.8T)

FIG.199
(M7018130)

Item No	Part No.	Mark	Description	Req'd	Remarks : Serial No.
1	210B8-10502		FORK ﾌｫｰｸ	2	A (L=770) INC.6-10
-	210B8-10502		FORK ﾌｫｰｸ	2	A [LF077] INC.6-10
-	210B8-10512		FORK ﾌｫｰｸ	2	A [LF085] INC.6-10
-	210F8-10502		FORK ﾌｫｰｸ	2	B,C [LF085] INC.6-10
-	210F8-10572		FORK ﾌｫｰｸ	2	[LF090] INC.6-10
-	210F8-10512		FORK ﾌｫｰｸ	2	B,C (L=920) INC.6-10
-	210B8-10522		FORK ﾌｫｰｸ	2	A [LF092] INC.6-10
-	210F8-10512		FORK ﾌｫｰｸ	2	B,C [LF092] INC.6-10
-	210F8-10512		FORK ﾌｫｰｸ	2	[EX](L=920) INC.6-10
-	210F8-10582		FORK ﾌｫｰｸ	2	[LF100] INC.6-10
-	210F8-10522		FORK ﾌｫｰｸ	2	[LF107] INC.6-10
-	210F8-10592		FORK ﾌｫｰｸ	2	[LF110] INC.6-10
-	210F8-10602		FORK ﾌｫｰｸ	2	[LF120] INC.6-10
-	210F8-10532		FORK ﾌｫｰｸ	2	[LF122] INC.6-10
-	210H8-10612		FORK ﾌｫｰｸ	2	[LF130] INC.6-10
-	210H8-10532		FORK ﾌｫｰｸ	2	[LF137] INC.6-10
-	210H8-10622		FORK ﾌｫｰｸ	2	[LF140] INC.6-10
-	210H8-10632		FORK ﾌｫｰｸ	2	[LF150] INC.6-10
-	210H8-10542		FORK ﾌｫｰｸ	2	[LF152] INC.6-10
-	210H8-10642		FORK ﾌｫｰｸ	2	[LF160] INC.6-10
-	210H8-10552		FORK ﾌｫｰｸ	2	B,C [LF167] INC.6-10
-	216B8-10301		FORK ﾌｫｰｸ	2	A [LFD077] INC.2-5
-	216B8-10311		FORK ﾌｫｰｸ	2	A [LFD085] INC.2-5
-	216G8-10301		FORK ﾌｫｰｸ	2	B [LFD085] INC.2-5
-	216K8-10361		FORK ﾌｫｰｸ	2	C [LFD085] INC.2-5
-	216G8-10371		FORK ﾌｫｰｸ	2	A,B [LFD090] INC.2-5
-	216K8-10371		FORK ﾌｫｰｸ	2	C [LFD090] INC.2-5
-	216B8-10321		FORK ﾌｫｰｸ	2	A [LFD092] INC.2-5
-	216G8-10311		FORK ﾌｫｰｸ	2	B [LFD092] INC.2-5
-	216K8-10301		FORK ﾌｫｰｸ	2	C [LFD092] INC.2-5
-	216G8-10381		FORK ﾌｫｰｸ	2	A,B [LFD100] INC.2-5

FIG.199 FORK [VFHM0A7]

(M7018130) フォーク

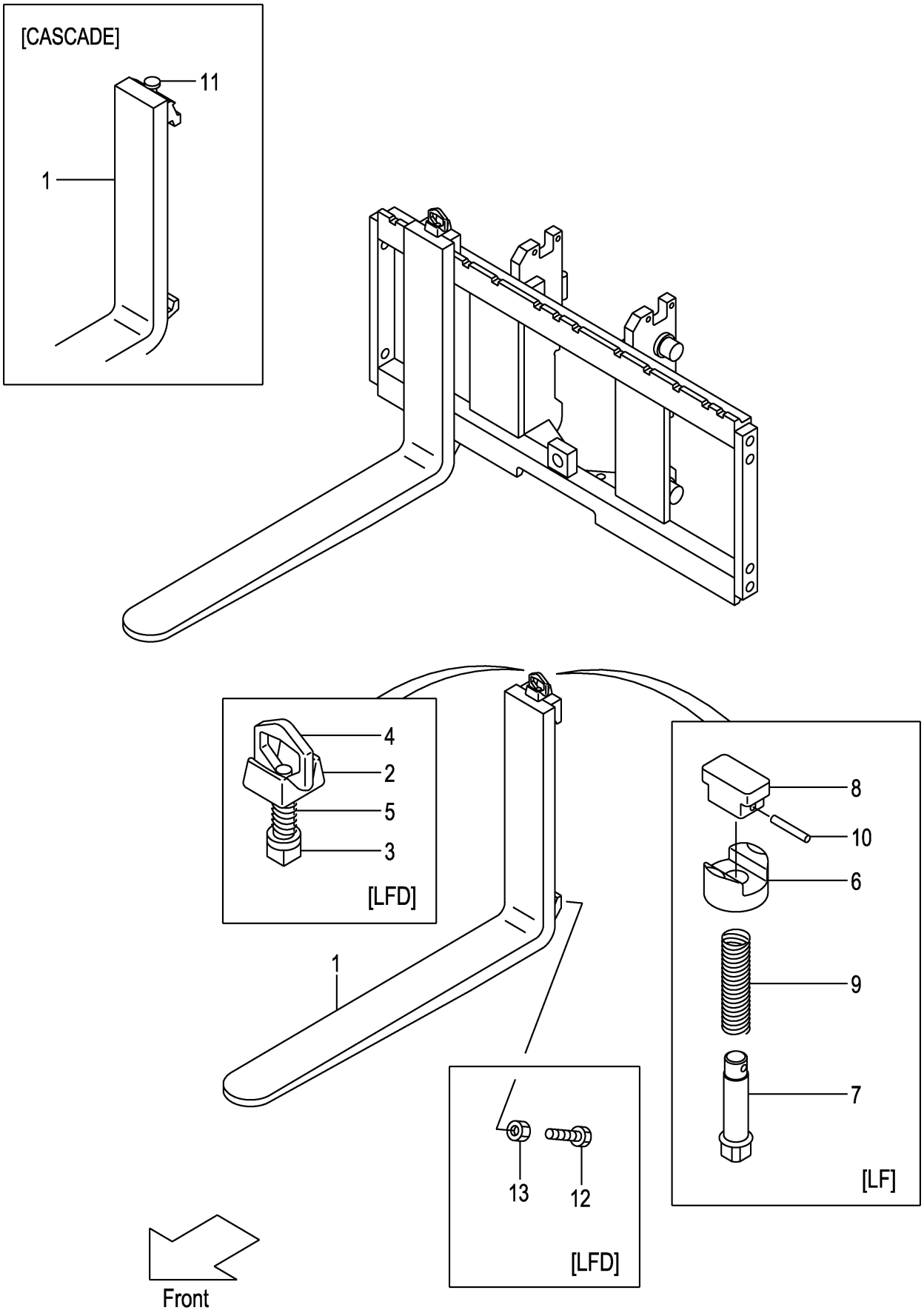

A:VFHM0A7(1.0T)
B:VFHM0A7(1.5T)
C:VFHM0A7(1.8T)

FIG.199
(M7018130)

Item No	Part No.	Mark	Description		Req'd	Remarks : Serial No.
-	216K8-10381		FORK	ﾌｫｰｸ	2	C [LFD100] INC.2-5
-	216G8-10321		FORK	ﾌｫｰｸ	2	A,B [LFD107] INC.2-5
-	216K8-10311		FORK	ﾌｫｰｸ	2	C [LFD107] INC.2-5
-	216G8-10391		FORK	ﾌｫｰｸ	2	A,B [LFD110] INC.2-5
-	216K8-10391		FORK	ﾌｫｰｸ	2	C [LFD110] INC.2-5
-	216G8-10401		FORK	ﾌｫｰｸ	2	A,B [LFD120] INC.2-5
-	216K8-10401		FORK	ﾌｫｰｸ	2	C [LFD120] INC.2-5
-	216G8-10331		FORK	ﾌｫｰｸ	2	A,B [LFD122] INC.2-5
-	216K8-10321		FORK	ﾌｫｰｸ	2	C [LFD122] INC.2-5
-	216G8-10411		FORK	ﾌｫｰｸ	2	A,B [LFD130] INC.2-5
-	216K8-10411		FORK	ﾌｫｰｸ	2	C [LFD130] INC.2-5
-	216G8-10341		FORK	ﾌｫｰｸ	2	A,B [LFD137] INC.2-5
-	216K8-10331		FORK	ﾌｫｰｸ	2	C [LFD137] INC.2-5
-	216G8-10421		FORK	ﾌｫｰｸ	2	A,B [LFD140] INC.2-5
-	216K8-10421		FORK	ﾌｫｰｸ	2	C [LFD140] INC.2-5
-	216G8-10431		FORK	ﾌｫｰｸ	2	A,B [LFD150] INC.2-5
-	216K8-10431		FORK	ﾌｫｰｸ	2	C [LFD150] INC.2-5
-	216G8-10351		FORK	ﾌｫｰｸ	2	A,B [LFD152] INC.2-5
-	216K8-10341		FORK	ﾌｫｰｸ	2	C [LFD152] INC.2-5
-	216G8-10441		FORK	ﾌｫｰｸ	2	A,B [LFD160] INC.2-5
-	216K8-10441		FORK	ﾌｫｰｸ	2	C [LFD160] INC.2-5
-	216G8-10361		FORK	ﾌｫｰｸ	2	B [LFD167] INC.2-5
-	216K8-10351		FORK	ﾌｫｰｸ	2	C [LFD167] INC.2-5
-	20A78-10511		FORK	ﾌｫｰｸ	2	[LF092/CASCADE] INC.11
-	20A78-10521		FORK	ﾌｫｰｸ	2	[LF107/CASCADE] INC.11
-	20A78-10531		FORK	ﾌｫｰｸ	2	[LF122/CASCADE] INC.11
A1	214A8-11001		STOPPER-ASSY,FORK	ﾌｫｰｸｽﾄｯﾊﾟｱｯｾﾝ	2	[LFD] INC.2-5

FIG.199 FORK [VFHM0A7]

(M7018130) フォーク

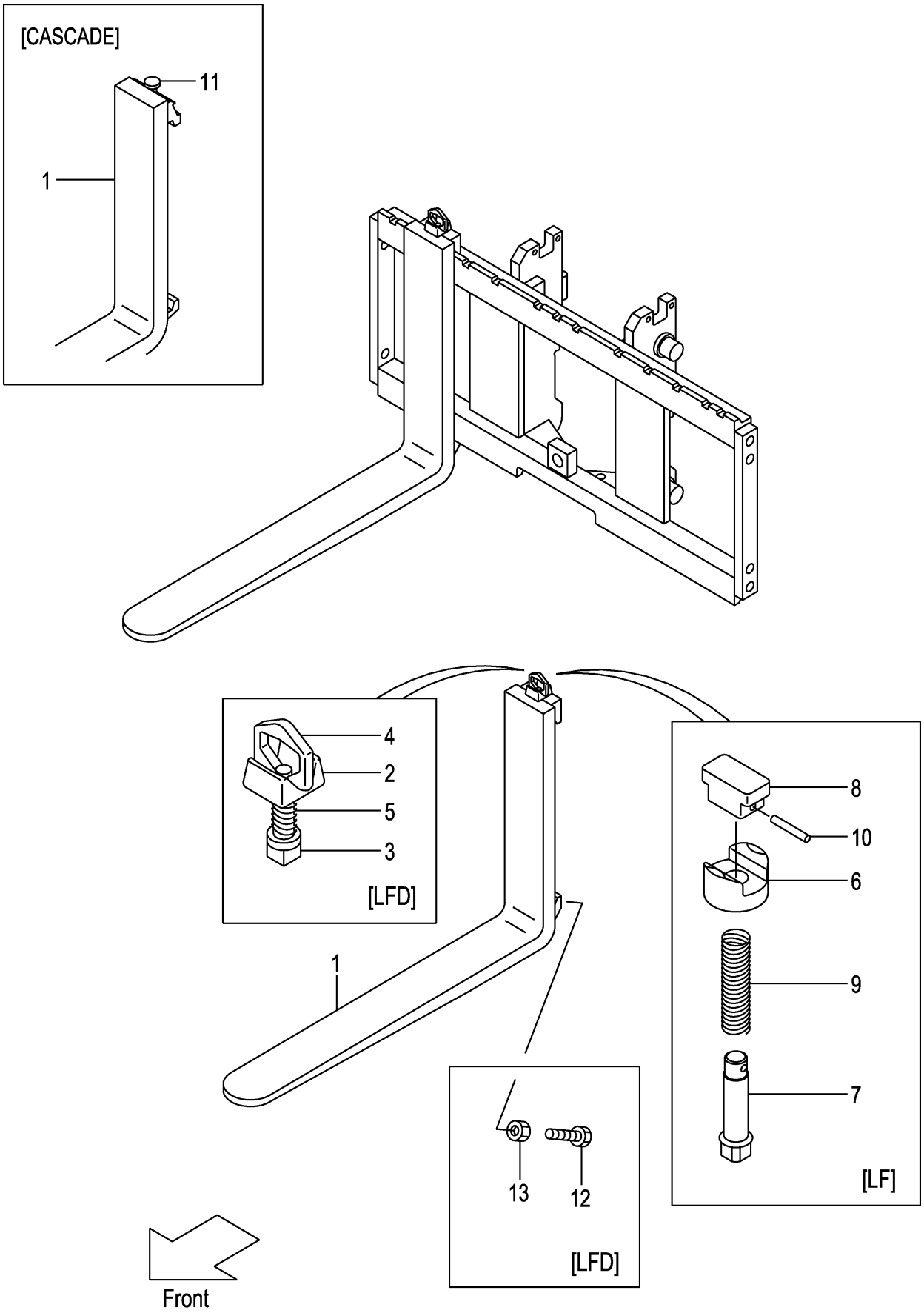

A:VFHM0A7(1.0T)
B:VFHM0A7(1.5T)
C:VFHM0A7(1.8T)

FIG.199
(M7018130)

Item No	Part No.	Mark	Description		Req'd	Remarks : Serial No.
2	214A8-12001		HEAD	ﾍｯﾄﾞ	2	[LFD]
3	214A8-12011		STOPPER	ｽﾄｯﾊﾟ	2	[LFD]
4	214A8-12021		HANDLE	ﾊﾝﾄﾞﾙ	2	[LFD]
5	214A8-12031		SPRING	ｽﾌﾟﾘﾝｸﾞ	2	[LFD]
6	216G8-12921		HOLDER	ﾎﾙﾀﾞ	2	[LF]
7	231A8-12001		PIN	ﾋﾟﾝ	2	[LF]
8	231A8-12011		KNOB	ﾉﾌﾞ	2	[LF]
9	231A8-12021		SPRING	ｽﾌﾟﾘﾝｸﾞ	2	[LF]
10	231A8-12031		PIN,SPRING	ﾋﾟﾝ	2	[LF]
11	W-K2PK-M		KIT,PIN,STOPPER	ｷｯﾄ	2	[CASCADE]
12	216G8-12101		BOLT	ﾎﾞﾙﾄ	4	[LFD]
13	01402-00010		NUT	ﾅｯﾄ	4	[LFD]

FIG.200 LIFT BRACKET [VFHM0A7]

(M7010910) ﾘﾌﾄﾌﾞﾗｹｯﾄ

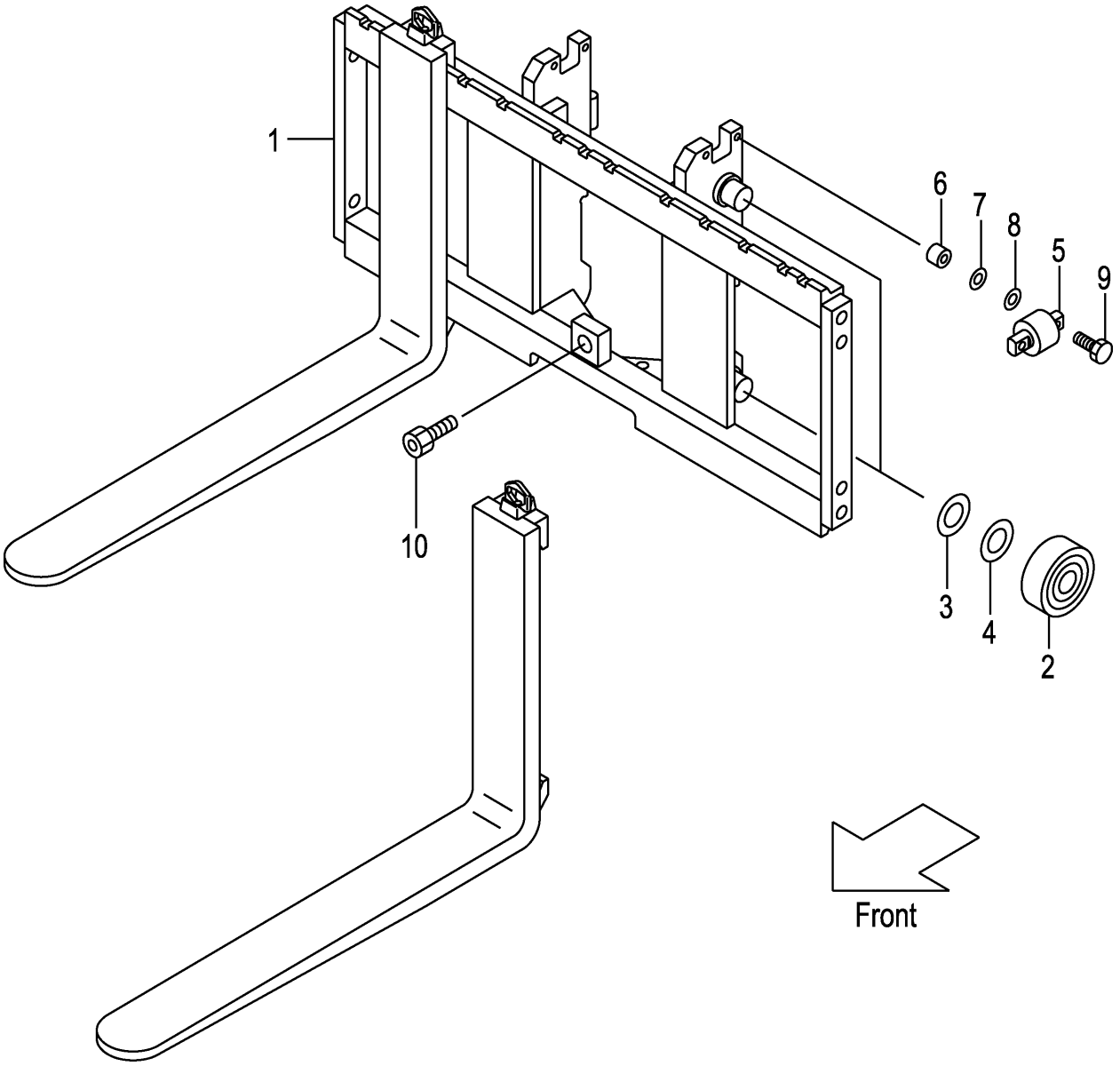

A:VFHM0A7(1.0T)
B:VFHM0A7(1.5T)
C:VFHM0A7(1.8T)

FIG.200
(M7010910)

Item No	Part No.	Mark	Description		Req'd	Remarks : Serial No.
1	20A70-90101		BRACKET,LIFT	ﾌﾞﾗｹｯﾄ	1	
-	50A71-61501		BRACKET,LIFT	ﾌﾞﾗｹｯﾄ	1	[WFY110][WFY114][WFY127] [WFY135][WFY138]
-	50A71-61601		BRACKET,LIFT	ﾌﾞﾗｹｯﾄ	1	[WFY135][WFY138][WFY145] [WFY146][WFY154][WFY180]
2	211F8-22201		ROLLER,END,102.0	ﾛｰﾗ	4	
-	211F8-22211		ROLLER,END,102.5	ﾛｰﾗ	(4)	
-	511F3-74021		ROLLER,END,102.0	ﾛｰﾗ	4	[FC][CS35][FCS35][FCS55] [FCS45]
-	511F3-74031		ROLLER,END,102.5	ﾛｰﾗ	(4)	[FC][CS35][FCS35][FCS55] [FCS45]
3	211F8-22261		SHIM,T-0.5	ｼﾑ	4	
4	211F8-22271		SHIM,T-1.0	ｼﾑ	8	
5	22018-30304		ROLLER,SIDE,41.0	ﾛｰﾗ	2	
-	510F3-74002		ROLLER,SIDE,41.0	ﾛｰﾗ	2	[FC][CS35][FCS35][FCS55] [FCS45]
6	22578-32841		SPACER	ｽﾍﾟｰｻ	4	
7	22018-30261		SHIM,T-0.2	ｼﾑ	8	
8	22018-30121		SHIM,T-1.0	ｼﾑ	4	
9	01103-10045		BOLT & WASHER	ﾎﾞﾙﾄ&ﾜｯｼｬ	4	
10	01184-12025		BOLT & WASHER	ﾎﾞﾙﾄ&ﾜｯｼｬ	1	
11	210F0-93001	+	CHART,CAPACITY	ﾁｬｰﾄ	1	A (VFHM360-500)
-	210F0-93011	+	CHART,CAPACITY	ﾁｬｰﾄ	1	A (VFHM540-750)
-	210F0-93201	+	CHART,CAPACITY	ﾁｬｰﾄ	1	B (VFHM360-500)
-	210F0-93211	+	CHART,CAPACITY	ﾁｬｰﾄ	1	B (VFHM540-750)
-	210F0-93301	+	CHART,CAPACITY	ﾁｬｰﾄ	1	C (VFHM360-500)
-	210F0-93311	+	CHART,CAPACITY	ﾁｬｰﾄ	1	C (VFHM540-750)
-	524T3-84031	+	CHART,CAPACITY	ﾁｬｰﾄ	1	[EXR]
-	210F0-93031	+	CHART,CAPACITY	ﾁｬｰﾄ	1	A [VFHM360-500/EXA]
-	210F0-93041	+	CHART,CAPACITY	ﾁｬｰﾄ	1	A [VFHM540-750/EXA]
-	210F0-93231	+	CHART,CAPACITY	ﾁｬｰﾄ	1	B [VFHM360-500/EXA]
-	210F0-93241	+	CHART,CAPACITY	ﾁｬｰﾄ	1	B [VFHM540-750/EXA]
-	210F0-93331	+	CHART,CAPACITY	ﾁｬｰﾄ	1	C [VFHM360-500/EXA]
-	210F0-93341	+	CHART,CAPACITY	ﾁｬｰﾄ	1	C [VFHM540-750/EXA]
-	514A3-82301	+	CHART,CAPACITY	ﾁｬｰﾄ	1	[EXB][EXC][EXE][EXN]
-	514A3-82331	+	CHART,CAPACITY	ﾁｬｰﾄ	1	[EXB/SPANISH][EXE/SPANISH]
-	514A3-82341	+	CHART,CAPACITY	ﾁｬｰﾄ	1	[EXB/FRENCH][EXE/FRENCH]
-	63110-18921	+	CHART,CAPACITY	ﾁｬｰﾄ	1	[EXB/CHINESE]

FIG.200 LIFT BRACKET [VFHM0A7]

(M7010910) ﾘﾌﾄﾌﾞﾗｹｯﾄ

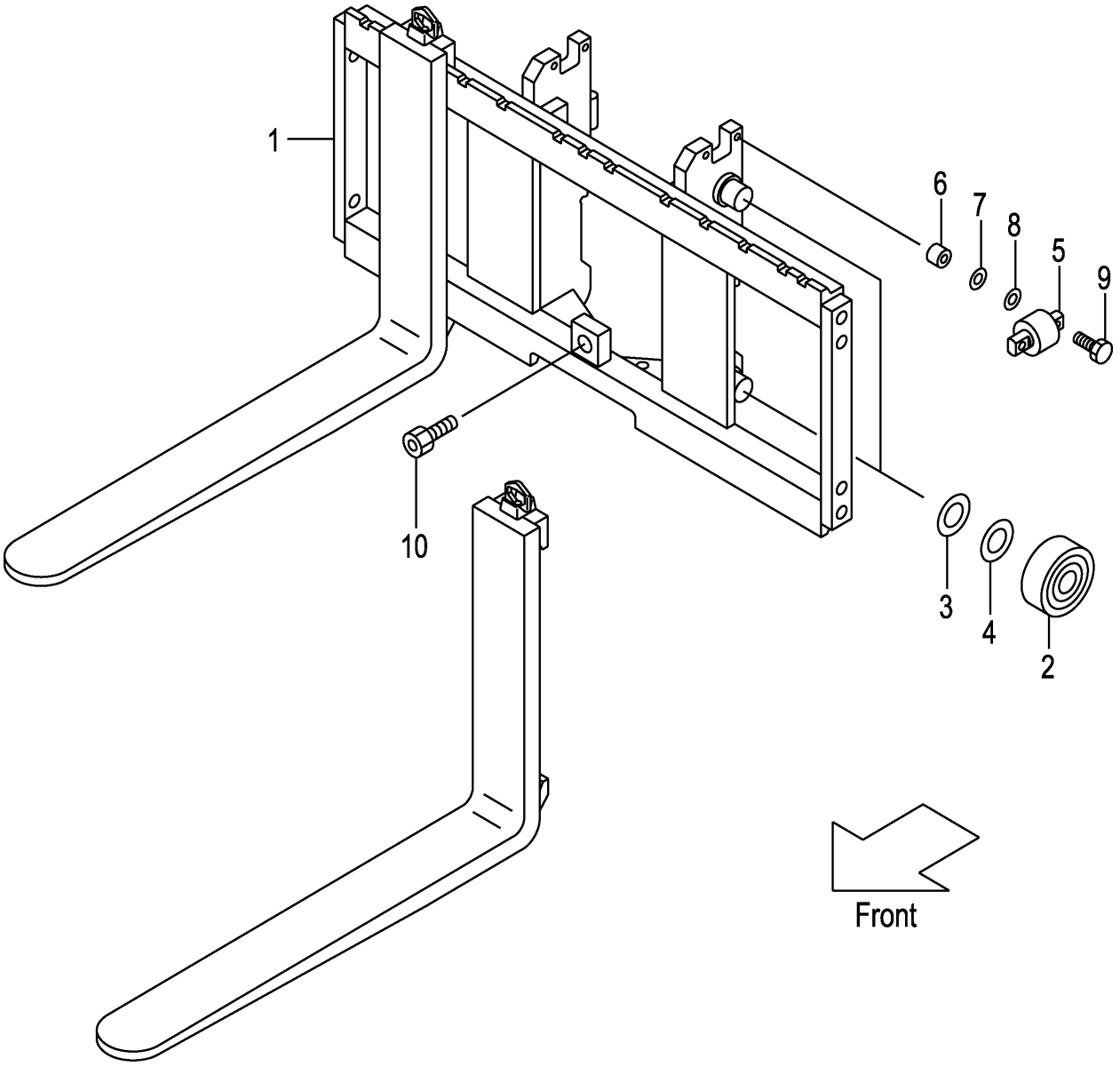

A:VFHM0A7(1.0T)
B:VFHM0A7(1.5T)
C:VFHM0A7(1.8T)

FIG.200
(M7010910)

Item No	Part No.	Mark	Description	Req'd	Remarks : Serial No.
-	514A3-82321	+	PLATE,CAPACITY ﾌﾟﾚｰﾄ	1	[EXD]
-	514A3-82351	+	CHART,CAPACITY ﾁｬｰﾄ	1	[EXEEC/DUTCH]
-	514A3-82361	+	CHART,CAPACITY ﾁｬｰﾄ	1	[EXEEC/DANISH][EXNEC/DANISH]
-	514A3-82371	+	CHART,CAPACITY ﾁｬｰﾄ	1	[EXEEC/ITALIAN]
-	514A3-82381	+	CHART,CAPACITY ﾁｬｰﾄ	1	[EXEEC/GREEK]
-	514A3-82391	+	CHART,CAPACITY ﾁｬｰﾄ	1	[EXEEC/PORTUGUESE]
-	529F3-82111	+	CHART,CAPACITY ﾁｬｰﾄ	1	[EXNEC/SWEDISH]
-	529F3-82101	+	CHART,CAPACITY ﾁｬｰﾄ	1	[EXNEC/FINNISH]
12	02432-01008	+	RIVET ﾘﾍﾞｯﾄ	4	

FIG.201 BACKREST [VFHM0A7]

(M7018240) ﾊﾞｯｸﾚｽﾄ

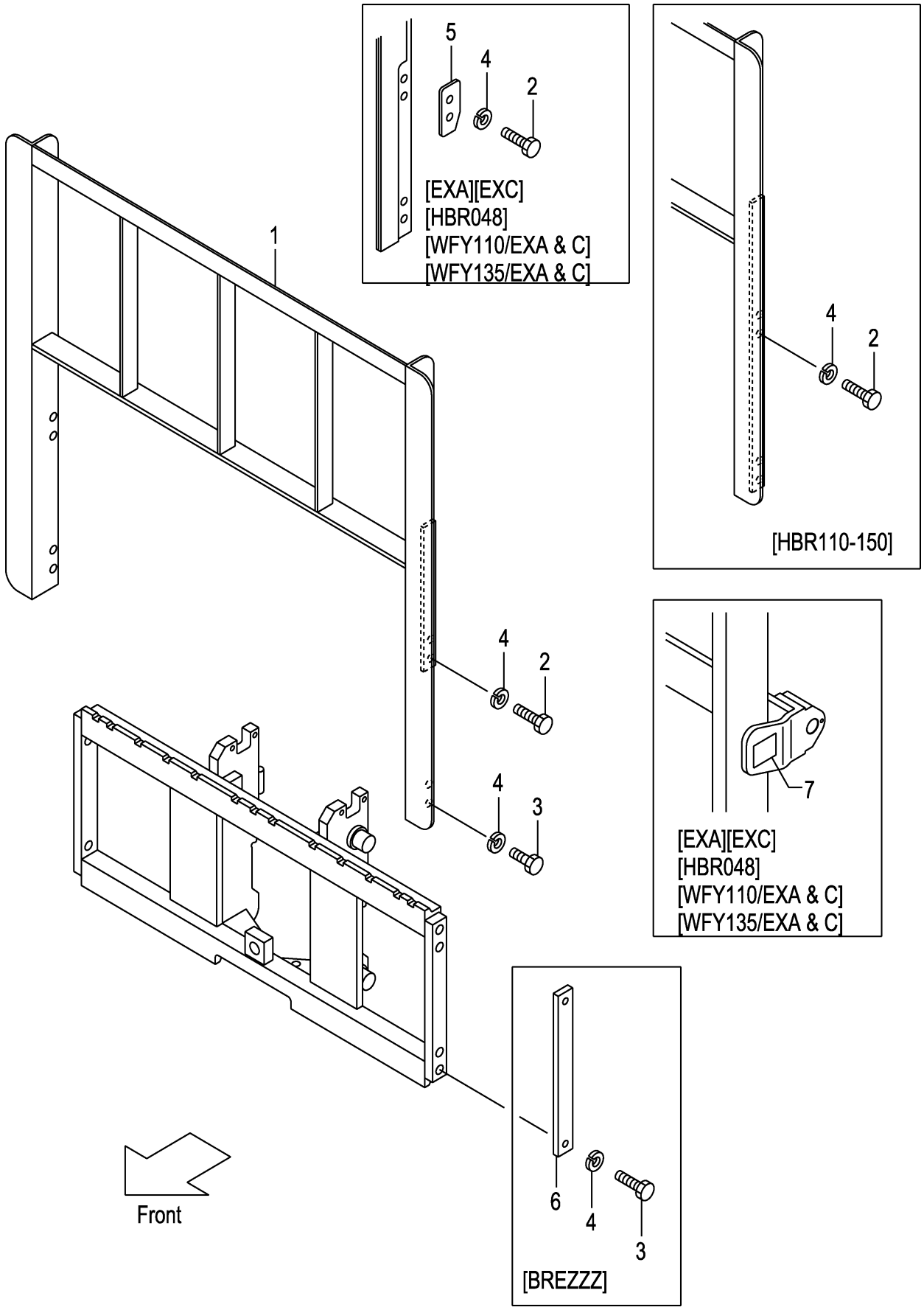

A:VFHM0A7(1.0T)
B:VFHM0A7(1.5T)
C:VFHM0A7(1.8T)

FIG.201
(M7018240)

Item No	Part No.	Mark	Description		Req'd	Remarks : Serial No.
1	216G8-22201		BACKREST	ﾊﾞｯｸﾚｽﾄ	1	
-	516G2-74301		BACKREST	ﾊﾞｯｸﾚｽﾄ	1	[EXA][EXC][HBR048]
-	216G8-22301		BACKREST	ﾊﾞｯｸﾚｽﾄ	1	[HBR110]
-	216G8-22311		BACKREST	ﾊﾞｯｸﾚｽﾄ	1	[HBR120]
-	216G8-22321		BACKREST	ﾊﾞｯｸﾚｽﾄ	1	[HBR130]
-	216G8-22331		BACKREST	ﾊﾞｯｸﾚｽﾄ	1	[HBR140]
-	216G8-22341		BACKREST	ﾊﾞｯｸﾚｽﾄ	1	[HBR150]
-	516G1-64301		BACKREST	ﾊﾞｯｸﾚｽﾄ	1	[WFY110]
-	516G1-64351		BACKREST	ﾊﾞｯｸﾚｽﾄ	1	[WFY135]
-	516G2-74101		BACKREST	ﾊﾞｯｸﾚｽﾄ	1	[WFY110/EXA][WFY110/EXC]
-	516G2-74201		BACKREST	ﾊﾞｯｸﾚｽﾄ	1	[WFY135/EXA][WFY135/EXC]
2	01100-14030		BOLT	ﾎﾞﾙﾄ	4	(WITHOUT BREZZZ)
-	01100-14035		BOLT	ﾎﾞﾙﾄ	4	[EXA][EXC][HBR048]
						[WFY110/EXA&C][WFY135/EXA&C]
-	01100-14030		BOLT	ﾎﾞﾙﾄ	8	[HRB110-150]
3	01100-14025		BOLT	ﾎﾞﾙﾄ	4	(WITHOUT HBR110-150)
4	02010-00014		WASHER	ﾜｯｼｬ	8	
-	02010-00014		WASHER	ﾜｯｼｬ	4	[BREZZZ]
5	534A2-74051		PLATE	ﾌﾟﾚｰﾄ	2	[EXA][EXC][HBR048]
						[WFY110/EXA&C][WFY135/EXA&C]
6	23659-42161		PLATE	ﾌﾟﾚｰﾄ	2	[BREZZZ]
7	534A2-74301		DECAL,CAUTION	ﾃﾞｶﾙ	1	[EXA][EXC][HBR048]
						[WFY110/EXA&C][WFY135/EXA&C]

FIG.202 MAST [VFHM0A7]

(M7010710) マスト

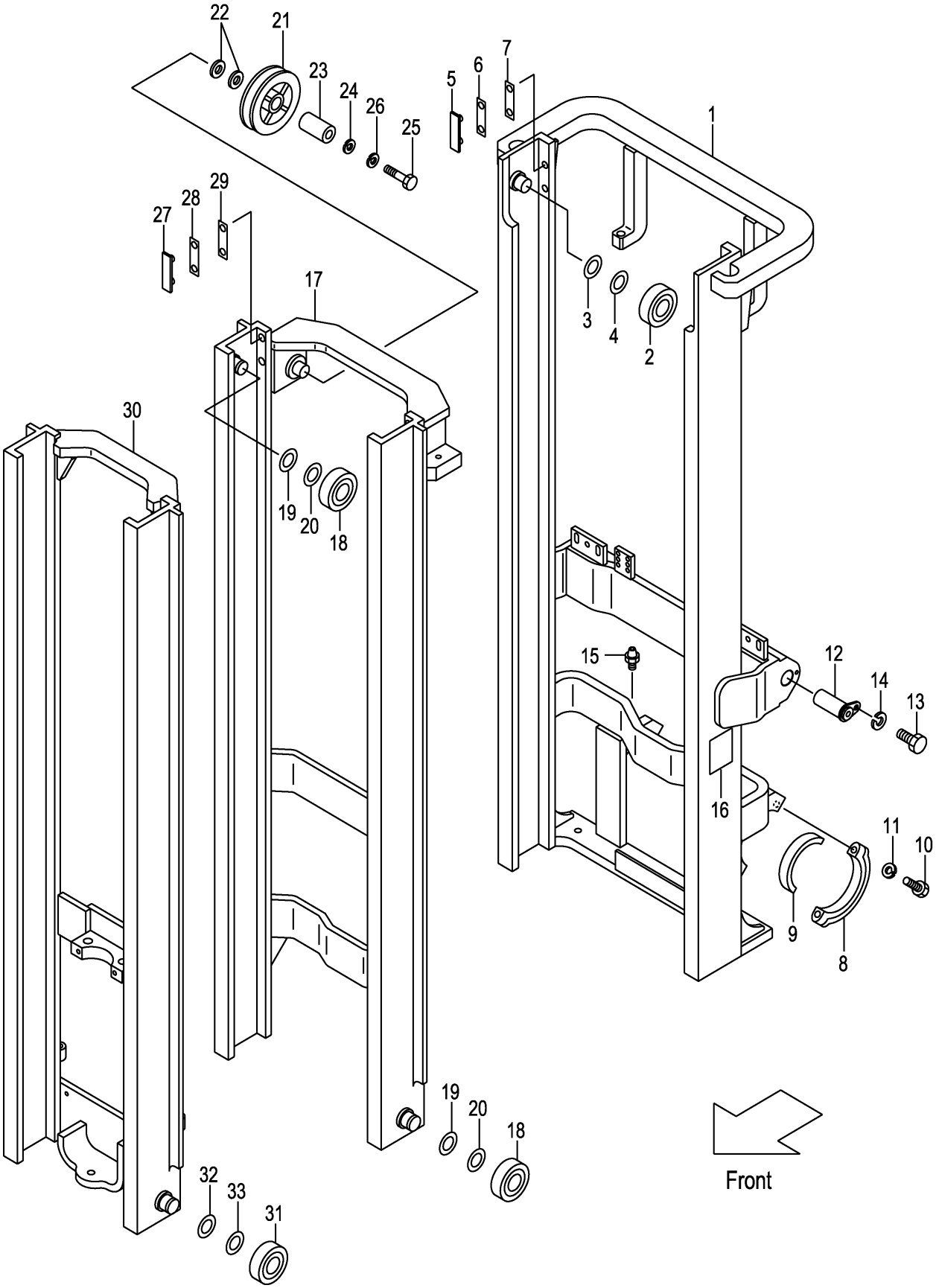

A:VFHM0A7(1.0T)
B:VFHM0A7(1.5T)
C:VFHM0A7(1.8T)

FIG.202
(M7010710)

Item No	Part No.	Mark	Description		Req'd	Remarks : Serial No.
1	20A70-70111		MAST,OUTER VFHM360	ﾏｽﾄ	1	
-	20A70-70121		MAST,OUTER VFHM400	ﾏｽﾄ	1	
-	20A70-70101		MAST,OUTER VFHM435	ﾏｽﾄ	1	
-	20A70-70131		MAST,OUTER VFHM480	ﾏｽﾄ	1	
-	20A70-70141		MAST,OUTER VFHM500	ﾏｽﾄ	1	
-	20A70-70151		MAST,OUTER VFHM540	ﾏｽﾄ	1	
-	20A70-70161		MAST,OUTER VFHM550	ﾏｽﾄ	1	
-	20A70-70171		MAST,OUTER VFHM600	ﾏｽﾄ	1	
-	20A70-70181		MAST,OUTER VFHM650	ﾏｽﾄ	1	
-	20A70-70191		MAST,OUTER VFHM700	ﾏｽﾄ	1	
-	20A70-70201		MAST,OUTER VFHM750	ﾏｽﾄ	1	
2	211F8-22221		ROLLER,END,102.0	ﾛｰﾗ	2	
-	211F8-22231		ROLLER,END,102.5	ﾛｰﾗ	(2)	
-	511F3-74021		ROLLER,END,102.0	ﾛｰﾗ	2	[FC][CS35][FCS35][FCS55] [FCS45]
-	511F3-74031		ROLLER,END,102.5	ﾛｰﾗ	(2)	[FC][CS35][FCS35][FCS55] [FCS45]
3	211F8-22261		SHIM,T-0.5	ｼﾑ	4	
4	211F8-22271		SHIM,T-1.0	ｼﾑ	8	
5	216G8-33401		SLIPPER	ｽﾘｯﾊﾟ	2	
6	216G8-33361		SHIM,T-0.5	ｼﾑ	8	
7	216G8-33371		SHIM,T-1.0	ｼﾑ	4	
8	210F6-12441		CAP	ｷｬｯﾌﾟ	2	
9	216G8-02001		BUSHING	ﾌﾞｯｼﾝｸﾞ	2	
10	01103-14065		BOLT	ﾎﾞﾙﾄ	4	
11	02010-00014		WASHER	ﾜｯｼｬ	4	
12	272K8-52201		PIN	ﾋﾟﾝ	2	
13	216G8-52301		BOLT	ﾎﾞﾙﾄ	2	
14	02010-20012		WASHER	ﾜｯｼｬ	2	
15	04901-00100		FITTING	ﾌｨｯﾃｨﾝｸﾞ	2	
16	23678-06002		PLATE,NAME	ﾌﾟﾚｰﾄ	1	
17	211F0-70312		MAST,MIDDLE VFHM360	ﾏｽﾄ	1	
-	211F0-70322		MAST,MIDDLE VFHM400	ﾏｽﾄ	1	
-	211F0-70302		MAST,MIDDLE VFHM435	ﾏｽﾄ	1	
-	211F0-70332		MAST,MIDDLE VFHM480	ﾏｽﾄ	1	
-	211F0-70342		MAST,MIDDLE VFHM500	ﾏｽﾄ	1	
-	211F0-70352		MAST,MIDDLE VFHM540	ﾏｽﾄ	1	
-	211F0-70362		MAST,MIDDLE VFHM550	ﾏｽﾄ	1	
-	211F0-70372		MAST,MIDDLE VFHM600	ﾏｽﾄ	1	
-	211F0-70382		MAST,MIDDLE VFHM650	ﾏｽﾄ	1	
-	211F0-70392		MAST,MIDDLE VFHM700	ﾏｽﾄ	1	
-	211F0-70402		MAST,MIDDLE VFHM750	ﾏｽﾄ	1	
18	211F8-22221		ROLLER,END,102.0	ﾛｰﾗ	4	
-	211F8-22231		ROLLER,END,102.5	ﾛｰﾗ	(4)	
-	511F3-74021		ROLLER,END,102.0	ﾛｰﾗ	4	[FC][CS35][FCS35][FCS55] [FCS45]
-	511F3-74031		ROLLER,END,102.5	ﾛｰﾗ	(4)	[FC][CS35][FCS35][FCS55] [FCS45]
19	211F8-22261		SHIM,T-0.5	ｼﾑ	8	
20	211F8-22271		SHIM,T-1.0	ｼﾑ	16	

FIG.202 MAST [VFHM0A7]

(M7010710) マスト

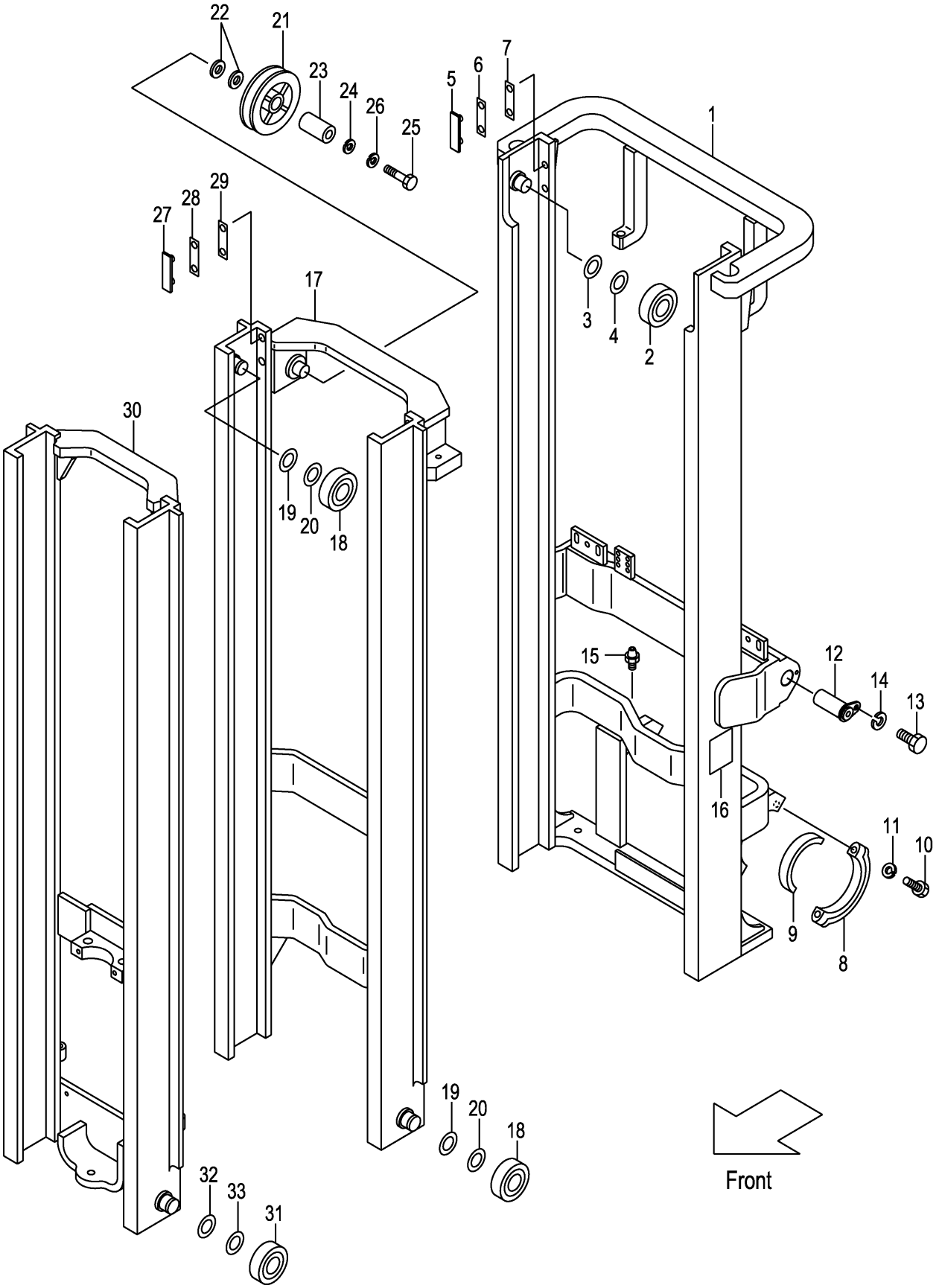

A:VFHM0A7(1.0T)
B:VFHM0A7(1.5T)
C:VFHM0A7(1.8T)

FIG.202
(M7010710)

Item No	Part No.	Mark	Description		Req'd	Remarks : Serial No.
21	63130-15301		PULLEY	ﾌﾟｰﾘ	1	
22	62050-12331		SPACER	ｽﾍﾟｰｻ	2	
23	214A0-72701		COLLAR	ｶﾗｰ	1	
24	02000-00016		WASHER	ﾜｯｼｬ	1	
25	01100-16060		BOLT	ﾎﾞﾙﾄ	1	
26	02010-00016		WASHER	ﾜｯｼｬ	1	
27	216G8-33351		SLIPPER	ｽﾘｯﾊﾟ	2	
28	216G8-33361		SHIM,T-0.5	ｼﾑ	16	
29	216G8-33371		SHIM,T-1.0	ｼﾑ	8	
30	20A70-70611		MAST,INNER VFHM360	ﾏｽﾄ	1	
-	20A70-70621		MAST,INNER VFHM400	ﾏｽﾄ	1	
-	20A70-70601		MAST,INNER VFHM435	ﾏｽﾄ	1	
-	20A70-70631		MAST,INNER VFHM480	ﾏｽﾄ	1	
-	20A70-70641		MAST,INNER VFHM500	ﾏｽﾄ	1	
-	20A70-70651		MAST,INNER VFHM540	ﾏｽﾄ	1	
-	20A70-70661		MAST,INNER VFHM550	ﾏｽﾄ	1	
-	20A70-70671		MAST,INNER VFHM600	ﾏｽﾄ	1	
-	20A70-70681		MAST,INNER VFHM650	ﾏｽﾄ	1	
-	20A70-70691		MAST,INNER VFHM700	ﾏｽﾄ	1	
-	20A70-70701		MAST,INNER VFHM750	ﾏｽﾄ	1	
31	211F8-22221		ROLLER,END,102.0	ﾛｰﾗ	2	
-	211F8-22231		ROLLER,END,102.5	ﾛｰﾗ	(2)	
-	511F3-74021		ROLLER,END,102.0	ﾛｰﾗ	2	[FC][CS35][FCS35][FCS55] [FCS45]
-	511F3-74031		ROLLER,END,102.5	ﾛｰﾗ	(2)	[FC][CS35][FCS35][FCS55] [FCS45]
32	211F8-22261		SHIM,T-0.5	ｼﾑ	4	
33	211F8-22271		SHIM,T-1.0	ｼﾑ	8	
34	229F6-42211	+	SEAL	ｼｰﾙ	8	

FIG.203 LIFT CYLINDER (FRONT)[VFHM0A7]

(M7010810) リフトシリンダ

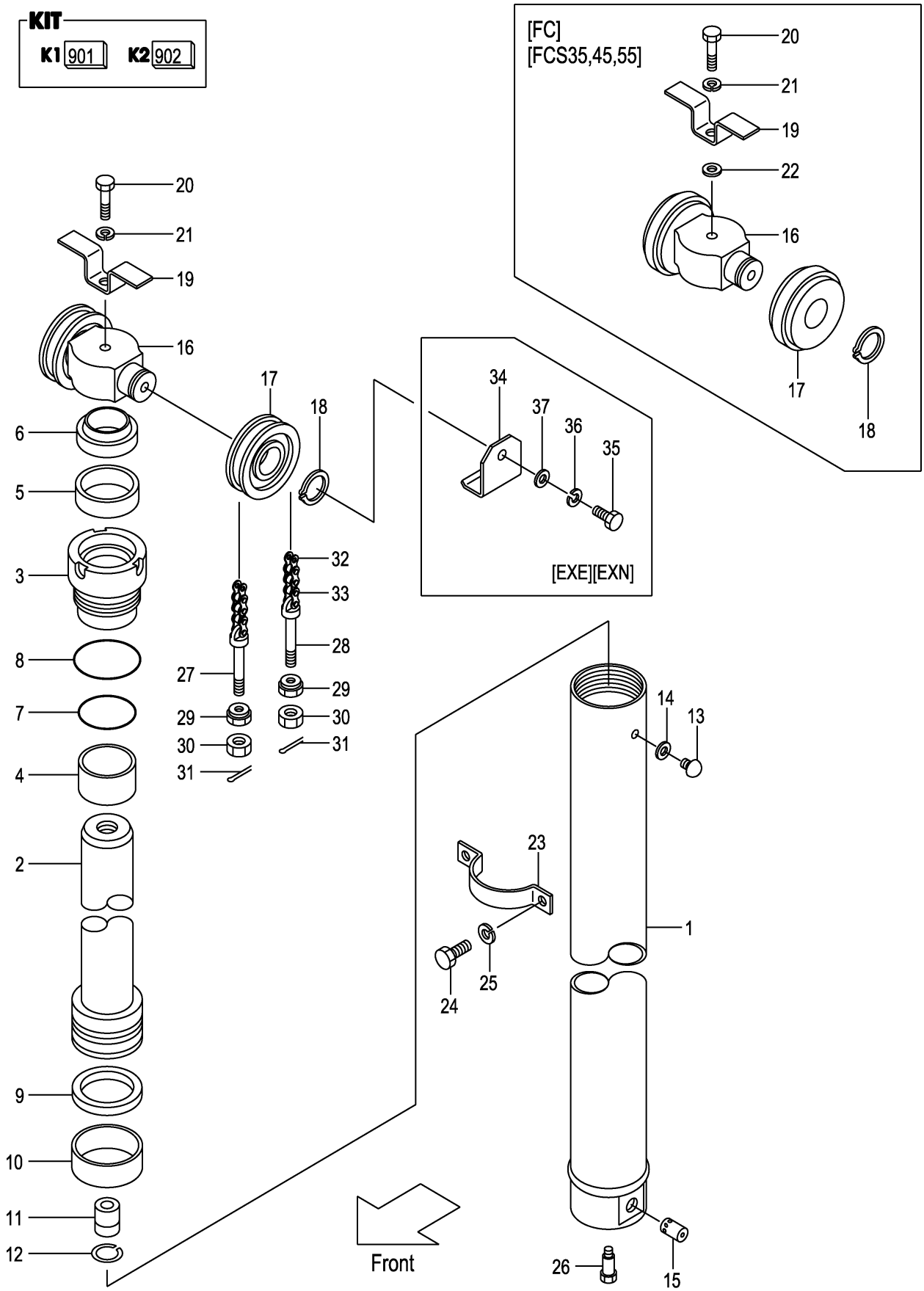

A:VFHM0A7(1.0T)
B:VFHM0A7(1.5T)
C:VFHM0A7(1.8T)

FIG.203
(M7010810)

Item No	Part No.	Mark	Description		Req'd	Remarks : Serial No.
A1	212R0-80511		CYL-ASSY,LIFT VFHM360	ﾘﾌﾄｼﾘﾝﾀﾞｱｯｾﾝ	1	INC.1-15
-	212R0-80521		CYL-ASSY,LIFT VFHM400	ﾘﾌﾄｼﾘﾝﾀﾞｱｯｾﾝ	1	INC.1-15
-	212R0-80531		CYL-ASSY,LIFT VFHM435	ﾘﾌﾄｼﾘﾝﾀﾞｱｯｾﾝ	1	INC.1-15
-	212R0-80501		CYL-ASSY,LIFT VFHM480	ﾘﾌﾄｼﾘﾝﾀﾞｱｯｾﾝ	1	INC.1-15
-	212R0-80541		CYL-ASSY,LIFT VFHM500	ﾘﾌﾄｼﾘﾝﾀﾞｱｯｾﾝ	1	INC.1-15
-	212R0-80551		CYL-ASSY,LIFT VFHM540	ﾘﾌﾄｼﾘﾝﾀﾞｱｯｾﾝ	1	INC.1-15
-	212R0-80561		CYL-ASSY,LIFT VFHM550	ﾘﾌﾄｼﾘﾝﾀﾞｱｯｾﾝ	1	INC.1-15
-	212R0-80571		CYL-ASSY,LIFT VFHM600	ﾘﾌﾄｼﾘﾝﾀﾞｱｯｾﾝ	1	INC.1-15
-	212R0-80581		CYL-ASSY,LIFT VFHM650	ﾘﾌﾄｼﾘﾝﾀﾞｱｯｾﾝ	1	INC.1-15
-	212R0-80591		CYL-ASSY,LIFT VFHM700	ﾘﾌﾄｼﾘﾝﾀﾞｱｯｾﾝ	1	INC.1-15
-	212R0-80601		CYL-ASSY,LIFT VFHM750	ﾘﾌﾄｼﾘﾝﾀﾞｱｯｾﾝ	1	INC.1-15
901	B-B670B-00024	K1	KIT,CYL-HEAD	ｼﾘﾝﾀﾞﾍｯﾄﾞｷｯﾄ	1	INC.3,4
902	B-B670A-00009	K2	KIT,REPAIR	ﾘﾍﾟｱｷｯﾄ	1	INC.5-10,14
1	B-B6717-86101		BODY,CYL VFHM360	ﾎﾞﾃﾞｨ	1	
-	B-B6717-86201		BODY,CYL VFHM400	ﾎﾞﾃﾞｨ	1	
-	B-B6717-86301		BODY,CYL VFHM435	ﾎﾞﾃﾞｨ	1	
-	B-B6717-86401		BODY,CYL VFHM480	ﾎﾞﾃﾞｨ	1	
-	B-B6717-86501		BODY,CYL VFHM500	ﾎﾞﾃﾞｨ	1	
-	B-B6717-86601		BODY,CYL VFHM540	ﾎﾞﾃﾞｨ	1	
-	B-B6717-86701		BODY,CYL VFHM550	ﾎﾞﾃﾞｨ	1	
-	B-B6717-86801		BODY,CYL VFHM600	ﾎﾞﾃﾞｨ	1	
-	B-B6717-86901		BODY,CYL VFHM650	ﾎﾞﾃﾞｨ	1	
-	B-B6717-87001		BODY,CYL VFHM700	ﾎﾞﾃﾞｨ	1	
-	B-B6717-87101		BODY,CYL VFHM750	ﾎﾞﾃﾞｨ	1	
2	B-B6717-86102		ROD VFHM360	ﾛｯﾄﾞ	1	
-	B-B6717-86202		ROD VFHM400	ﾛｯﾄﾞ	1	
-	B-B6717-86302		ROD VFHM435	ﾛｯﾄﾞ	1	
-	B-B6717-86402		ROD VFHM480	ﾛｯﾄﾞ	1	
-	B-B6717-86502		ROD VFHM500	ﾛｯﾄﾞ	1	
-	B-B6717-86602		ROD VFHM540	ﾛｯﾄﾞ	1	
-	B-B6717-86702		ROD VFHM550	ﾛｯﾄﾞ	1	
-	B-B6717-86802		ROD VFHM600	ﾛｯﾄﾞ	1	
-	B-B6717-86902		ROD VFHM650	ﾛｯﾄﾞ	1	
-	B-B6717-87002		ROD VFHM700	ﾛｯﾄﾞ	1	
-	B-B6717-87102		ROD VFHM750	ﾛｯﾄﾞ	1	
3	NO PART NO.	#*	HEAD	ﾍｯﾄﾞ	1	
4	B-30131-55009	*	BUSHING	ﾌﾞｯｼﾝｸﾞ	1	
5	B-30961-55013	*	U-RING	Uﾘﾝｸﾞ	1	
6	B-30191-55050	*	RING,WIPER	ﾘﾝｸﾞ	1	
7	B-95123-06500	*	O-RING	Oﾘﾝｸﾞ	1	
8	B-95151-07000	*	O-RING	Oﾘﾝｸﾞ	1	
9	B-B9683-70007	*	RING,SEAL	ﾘﾝｸﾞ	1	
10	B-B6181-70007	*	RING,SLIDE	ﾘﾝｸﾞ	1	
11	B-C4300-22001		VALVE,CHECK	ﾊﾞﾙﾌﾞ	1	
12	B-94721-22101		RING,SNAP	ﾘﾝｸﾞ	1	
13	B-B6521-90004		PLUG	ﾌﾟﾗｸﾞ	1	
14	B-B6711-00001	*	GASKET	ｶﾞｽｹｯﾄ	1	
15	B-26570-30115		VALVE	ﾊﾞﾙﾌﾞ	1	
16	212R0-83001		HEAD,PISTON	ﾍｯﾄﾞ	1	
17	216G8-42031		SHEAVE	ｼｰﾌﾞ	2	

FIG.203 LIFT CYLINDER (FRONT)[VFHM0A7]

(M7010810) リフトシリンダ

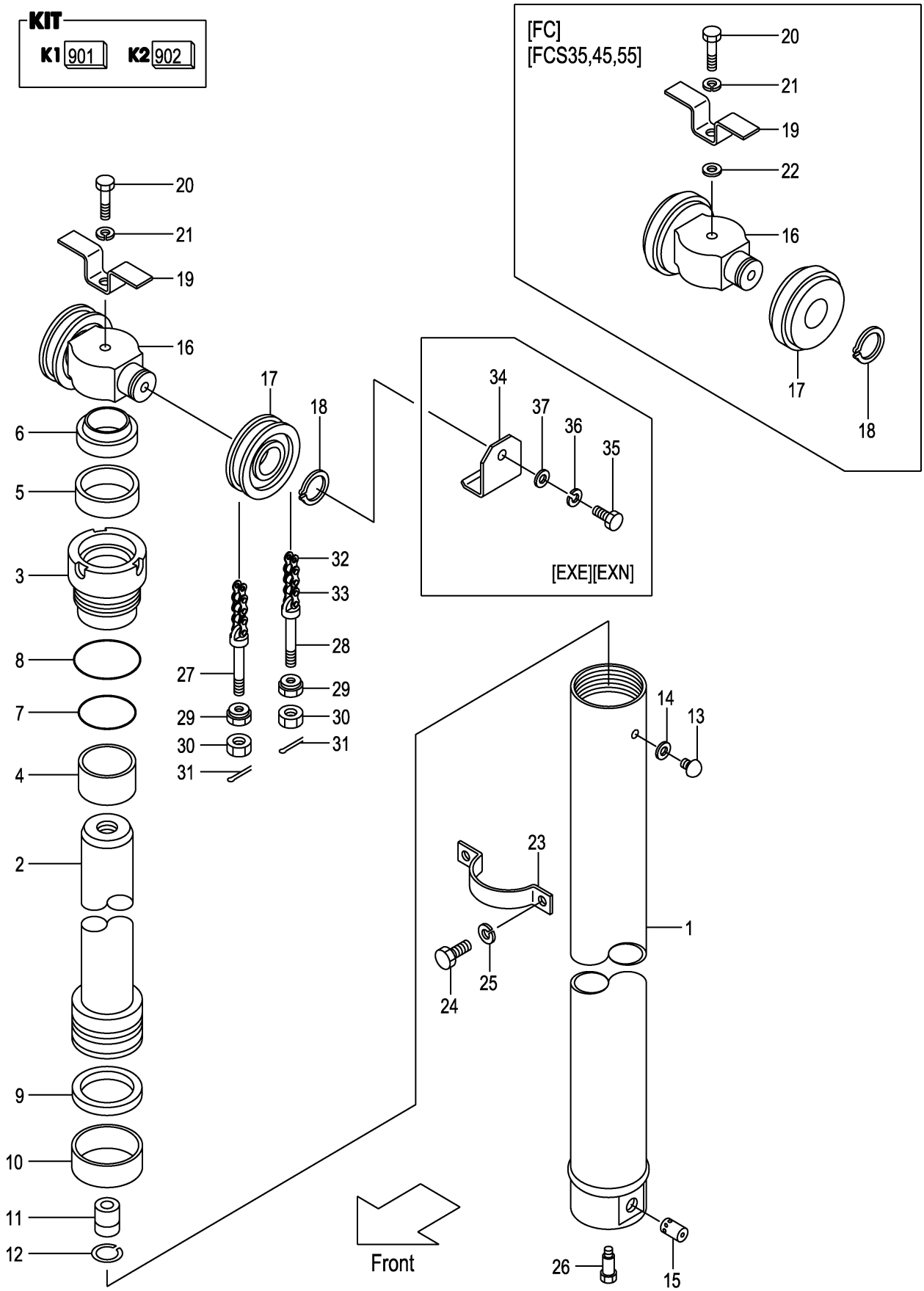

A:VFHM0A7(1.0T)
B:VFHM0A7(1.5T)
C:VFHM0A7(1.8T)

FIG.203
(M7010810)

Item No	Part No.	Mark	Description		Req'd	Remarks : Serial No.
-	516G3-74001		SHEAVE	ｼｰﾌﾞ	2	[FC][FCS35][FCS55][FCS45]
18	02100-00035		RING,SNAP	ﾘﾝｸﾞ	2	
19	215T0-83021		STOPPER	ｽﾄｯﾊﾟ	1	
20	01100-16060		BOLT	ﾎﾞﾙﾄ	1	
-	01100-16065		BOLT	ﾎﾞﾙﾄ	1	[FC][FCS35][FCS55][FCS45]
21	02010-00016		WASHER	ﾜｯｼｬ	1	
22	02000-00016		WASHER	ﾜｯｼｬ	1	[FC][FCS35][FCS55][FCS45]
23	212R0-83011		SUPPORT	ｻﾎﾟｰﾄ	1	
24	01103-10020		BOLT	ﾎﾞﾙﾄ	2	
25	02011-00010		WASHER	ﾜｯｼｬ	2	
26	214A0-82831		BOLT,SET	ﾎﾞﾙﾄ	1	
27	218G8-42501		PIN,ANCHOR	ﾋﾟﾝ	2	
-	510F5-54051		PIN,ANCHOR	ﾋﾟﾝ	2	[FC][FCS35][FCS55][FCS45]
28	218G8-42521		PIN,ANCHOR	ﾋﾟﾝ	2	
-	510F5-54061		PIN,ANCHOR	ﾋﾟﾝ	2	[FC][FCS35][FCS55][FCS45]
29	22118-40181		NUT	ﾅｯﾄ	4	
30	01400-00014		NUT	ﾅｯﾄ	4	
31	02200-03030		PIN	ﾋﾟﾝ	4	
32	218G8-45791		CHAIN,LEAF VFHM360	ﾁｪｰﾝ	2	INC.33
-	218G8-45871		CHAIN,LEAF VFHM400	ﾁｪｰﾝ	2	INC.33
-	218G8-45951		CHAIN,LEAF VFHM435	ﾁｪｰﾝ	2	INC.33
-	218G8-46031		CHAIN,LEAF VFHM480	ﾁｪｰﾝ	2	INC.33
-	218G8-46091		CHAIN,LEAF VFHM500	ﾁｪｰﾝ	2	INC.33
-	218G8-46171		CHAIN,LEAF VFHM540	ﾁｪｰﾝ	2	INC.33
-	218G8-46211		CHAIN,LEAF VFHM550	ﾁｪｰﾝ	2	INC.33
-	218G8-46331		CHAIN,LEAF VFHM600	ﾁｪｰﾝ	2	INC.33
-	218G8-46451		CHAIN,LEAF VFHM650	ﾁｪｰﾝ	2	INC.33
-	218G8-46591		CHAIN,LEAF VFHM700	ﾁｪｰﾝ	2	INC.33
-	218G8-46691		CHAIN,LEAF VFHM750	ﾁｪｰﾝ	2	INC.33
-	09001-08051		CHAIN,ROLLER VFHM360	ﾁｪｰﾝ	2	[FC][FCS35][FCS55][FCS45]
-	09001-08057		CHAIN,ROLLER VFHM400	ﾁｪｰﾝ	2	[FC][FCS35][FCS55][FCS45]
-	09001-08061		CHAIN,ROLLER VFHM435	ﾁｪｰﾝ	2	[FC][FCS35][FCS55][FCS45]
-	09001-08067		CHAIN,ROLLER VFHM480	ﾁｪｰﾝ	2	[FC][FCS35][FCS55][FCS45]
-	09001-08071		CHAIN,ROLLER VFHM500	ﾁｪｰﾝ	2	[FC][FCS35][FCS55][FCS45]
-	09001-08077		CHAIN,ROLLER VFHM540	ﾁｪｰﾝ	2	[FC][FCS35][FCS55][FCS45]
-	09001-08077		CHAIN,ROLLER VFHM550	ﾁｪｰﾝ	2	[FC][FCS35][FCS55][FCS45]
-	09001-08085		CHAIN,ROLLER VFHM600	ﾁｪｰﾝ	2	[FC][FCS35][FCS55][FCS45]
-	09001-08093		CHAIN,ROLLER VFHM650	ﾁｪｰﾝ	2	[FC][FCS35][FCS55][FCS45]
-	09001-08103		CHAIN,ROLLER VFHM700	ﾁｪｰﾝ	2	[FC][FCS35][FCS55][FCS45]
-	09001-08109		CHAIN,ROLLER VFHM750	ﾁｪｰﾝ	2	[FC][FCS35][FCS55][FCS45]
33	218G8-42701		LINK	ﾘﾝｸ	4	
34	57393-02041		COVER	ｶﾊﾞｰ	2	[EXE][EXN]
35	01100-16016		BOLT	ﾎﾞﾙﾄ	2	[EXE][EXN]
36	02010-00016		WASHER	ﾜｯｼｬ	2	[EXE][EXN]
37	02000-00016		WASHER	ﾜｯｼｬ	2	[EXE][EXN]

FIG.204 LIFT CYLINDER (REAR)[VFHM0A7]

(M7010820) リフトシリンダ

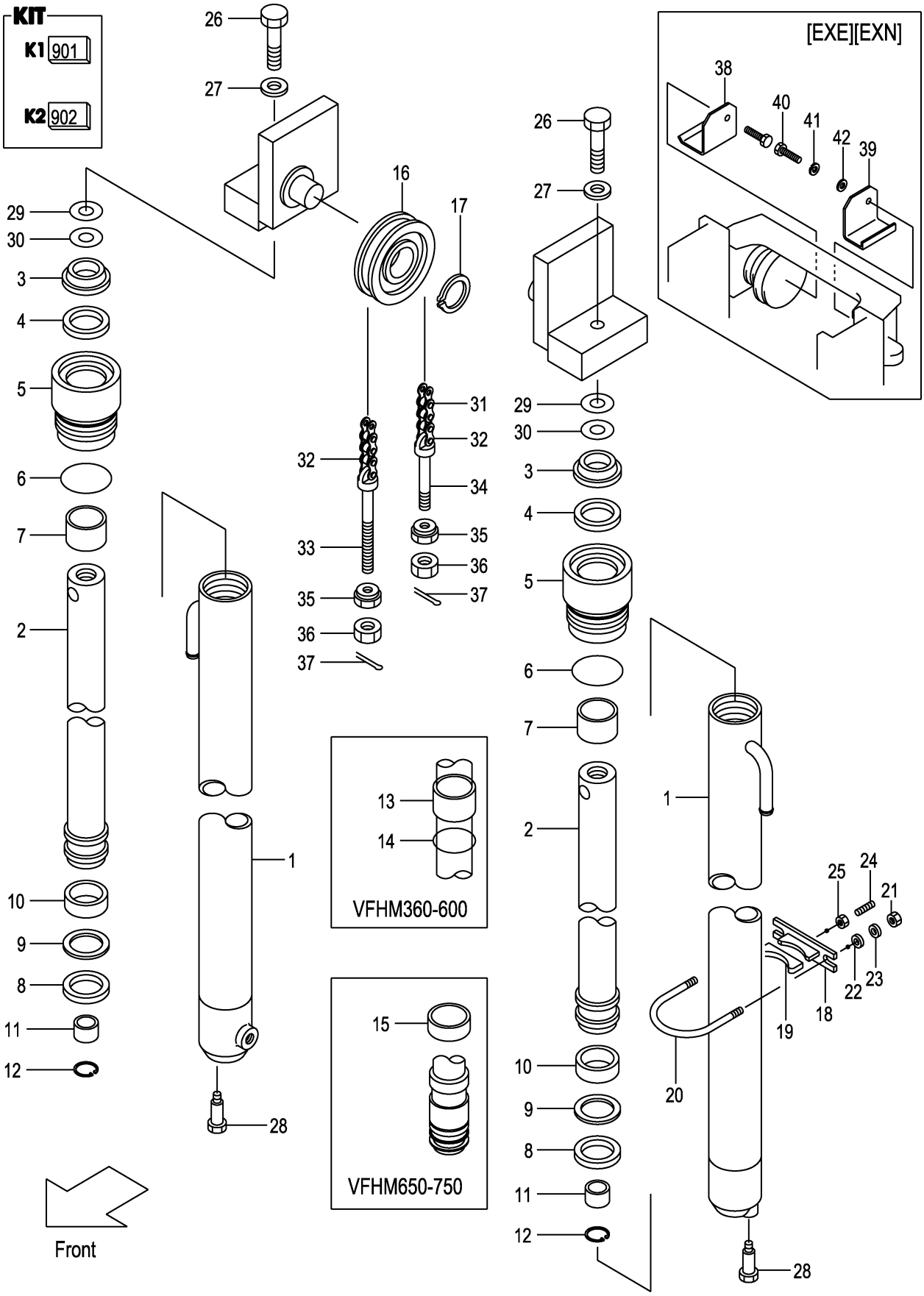

A:VFHM0A7(1.0T)
B:VFHM0A7(1.5T)
C:VFHM0A7(1.8T)

FIG.204
(M7010820)

Item No	Part No.	Mark	Description		Req'd	Remarks : Serial No.
A1	20A70-81611		CYL-ASSY,LIFT VFHM360	ﾘﾌﾄｼﾘﾝﾀﾞｱｯｾﾝ	2	INC.1-14
-	20A70-81621		CYL-ASSY,LIFT VFHM400	ﾘﾌﾄｼﾘﾝﾀﾞｱｯｾﾝ	2	INC.1-14
-	20A70-81601		CYL-ASSY,LIFT VFHM435	ﾘﾌﾄｼﾘﾝﾀﾞｱｯｾﾝ	2	INC.1-14
-	20A70-81631		CYL-ASSY,LIFT VFHM480	ﾘﾌﾄｼﾘﾝﾀﾞｱｯｾﾝ	2	INC.1-14
-	20A70-81641		CYL-ASSY,LIFT VFHM500	ﾘﾌﾄｼﾘﾝﾀﾞｱｯｾﾝ	2	INC.1-14
-	20A70-81651		CYL-ASSY,LIFT VFHM540	ﾘﾌﾄｼﾘﾝﾀﾞｱｯｾﾝ	2	INC.1-14
-	20A70-81661		CYL-ASSY,LIFT VFHM550	ﾘﾌﾄｼﾘﾝﾀﾞｱｯｾﾝ	2	INC.1-14
-	20A70-81671		CYL-ASSY,LIFT VFHM600	ﾘﾌﾄｼﾘﾝﾀﾞｱｯｾﾝ	2	INC.1-14
-	20A70-81681		CYL-ASSY,LIFT VFHM650	ﾘﾌﾄｼﾘﾝﾀﾞｱｯｾﾝ	2	INC.1-12,15
-	20A70-81691		CYL-ASSY,LIFT VFHM700	ﾘﾌﾄｼﾘﾝﾀﾞｱｯｾﾝ	2	INC.1-12,15
-	20A70-81701		CYL-ASSY,LIFT VFHM750	ﾘﾌﾄｼﾘﾝﾀﾞｱｯｾﾝ	2	INC.1-12,15
901	B-3045B-00026	K1	KIT,OVERHAUL	ｵｰﾊﾞﾎｰﾙｷｯﾄ	2	INC.5,7
902	B-3045A-00020	K2	KIT,REPAIR	ﾘﾍﾟｱｷｯﾄ	2	INC.3,4,6,8,9
1	B-B6567-39601		BODY,CYL VFHM360	ﾎﾞﾃﾞｨ	2	
-	B-B6567-39701		BODY,CYL VFHM400	ﾎﾞﾃﾞｨ	2	
-	B-B6567-39801		BODY,CYL VFHM435	ﾎﾞﾃﾞｨ	2	
-	B-B6567-39901		BODY,CYL VFHM480	ﾎﾞﾃﾞｨ	2	
-	B-B6567-40001		BODY,CYL VFHM500	ﾎﾞﾃﾞｨ	2	
-	B-B6567-40101		BODY,CYL VFHM540	ﾎﾞﾃﾞｨ	2	
-	B-B6567-40201		BODY,CYL VFHM550	ﾎﾞﾃﾞｨ	2	
-	B-B6567-40301		BODY,CYL VFHM600	ﾎﾞﾃﾞｨ	2	
-	B-B6567-40401		BODY,CYL VFHM650	ﾎﾞﾃﾞｨ	2	
-	B-B6567-40501		BODY,CYL VFHM700	ﾎﾞﾃﾞｨ	2	
-	B-B6567-40601		BODY,CYL VFHM750	ﾎﾞﾃﾞｨ	2	
2	B-B6567-39602		ROD,PISTON VFHM360	ﾛｯﾄﾞ	2	
-	B-B6567-39702		ROD,PISTON VFHM400	ﾛｯﾄﾞ	2	
-	B-B6567-39802		ROD,PISTON VFHM435	ﾛｯﾄﾞ	2	
-	B-B6567-39902		ROD,PISTON VFHM480	ﾛｯﾄﾞ	2	
-	B-B6567-40002		ROD,PISTON VFHM500	ﾛｯﾄﾞ	2	
-	B-B6567-40102		ROD,PISTON VFHM540	ﾛｯﾄﾞ	2	
-	B-B6567-40202		ROD,PISTON VFHM550	ﾛｯﾄﾞ	2	
-	B-B6567-40302		ROD,PISTON VFHM600	ﾛｯﾄﾞ	2	
-	B-B6567-40402		ROD,PISTON VFHM650	ﾛｯﾄﾞ	2	
-	B-B6567-40502		ROD,PISTON VFHM700	ﾛｯﾄﾞ	2	
-	B-B6567-40602		ROD,PISTON VFHM750	ﾛｯﾄﾞ	2	
3	B-30191-35025	*	RING,WIPER	ﾘﾝｸﾞ	2	
4	B-30961-03512	*	U-RING	Uﾘﾝｸﾞ	2	
5	NO PART NO.	#*	HEAD,CYL	ﾍｯﾄﾞ	2	
6	B-30161-91773	*	O-RING	Oﾘﾝｸﾞ	2	
7	B-30131-35017	*	BUSHING	ﾌﾞｯｼﾝｸﾞ	2	
8	B-30161-45046	*	U-RING	Uﾘﾝｸﾞ	2	
9	B-30461-45039	*	RING,BACK-UP	ﾘﾝｸﾞ	2	
10	B-30131-45018		BUSHING	ﾌﾞｯｼﾝｸﾞ	2	
11	B-B6551-91008		RING,CUSHION	ﾘﾝｸﾞ	2	
12	B-30141-91049		RING,SNAP	ﾘﾝｸﾞ	2	
13	B-B6111-35039		SPACER	ｽﾍﾟｰｻ	2	(VFHM360-480)
-	B-B6111-35049		SPACER	ｽﾍﾟｰｻ	2	(VFHM500,550)
-	B-B6111-35047		SPACER	ｽﾍﾟｰｻ	2	[VFHM540-750/EXA]
-	B-B6111-35053		SPACER	ｽﾍﾟｰｻ	2	(VFHM600)
14	B-95151-03500		O-RING	Oﾘﾝｸﾞ	2	(VFHM360-600)

FIG.204 LIFT CYLINDER (REAR)[VFHM0A7]

(M7010820) リフトシリンダ

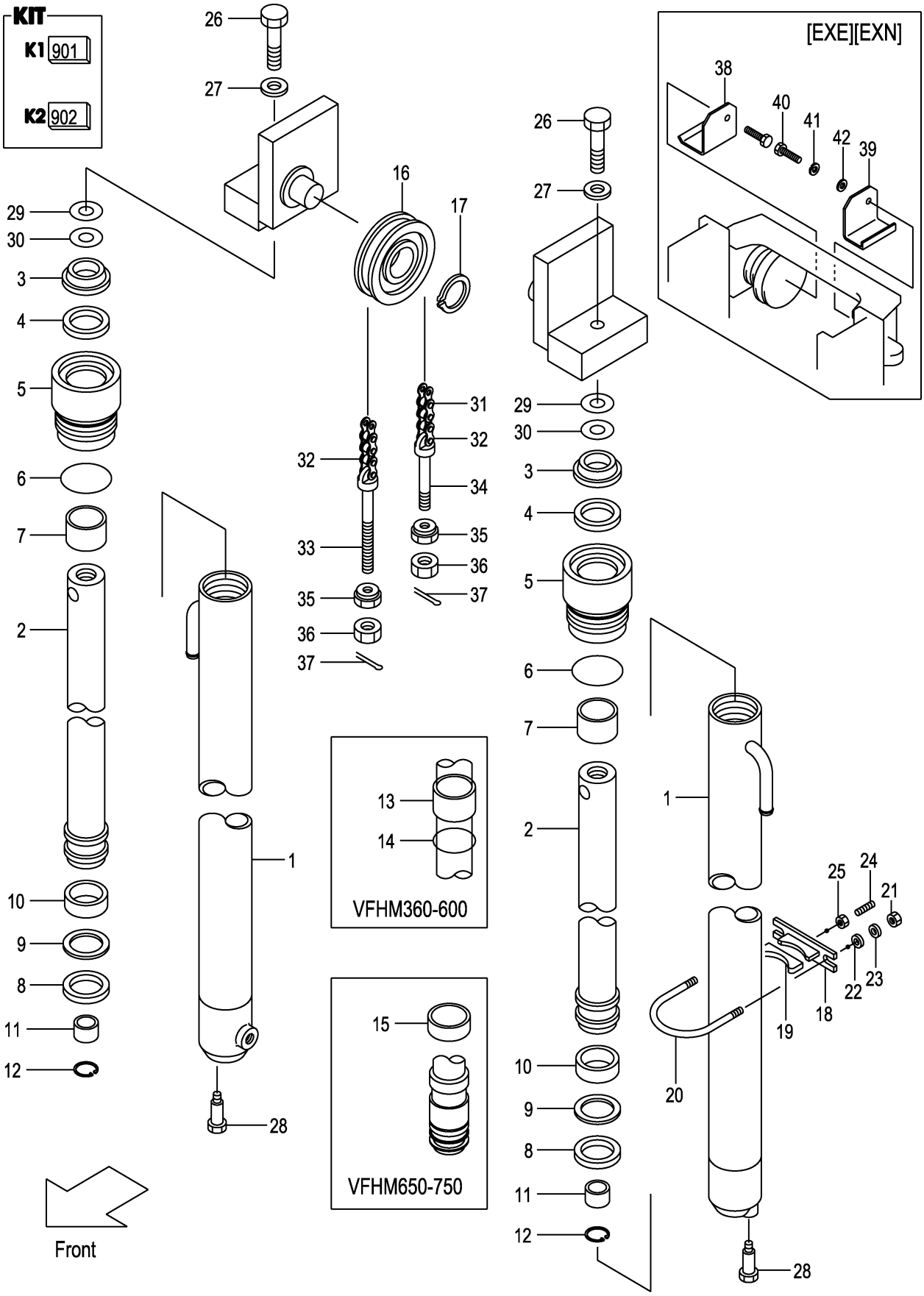

A:VFHM0A7(1.0T)
B:VFHM0A7(1.5T)
C:VFHM0A7(1.8T)

FIG.204
(M7010820)

Item No	Part No.	Mark	Description		Req'd	Remarks : Serial No.
15	B-30776-00106		RING,WIPER	ﾘﾝｸﾞ	1	(VFHM650-750)
16	234A8-43501		SHEAVE	ｼｰﾌﾞ	2	
17	02100-00040		RING,SNAP	ﾘﾝｸﾞ	2	
A2	22N58-43021		SUPPORT-ASSY	ｻﾎﾟｰﾄｱｯｾﾝ	2	INC.18,19
18	22N58-43011		SUPPORT	ｻﾎﾟｰﾄ	2	
19	24868-42111		RUBBER	ﾗﾊﾞｰ	2	
20	216G8-43161		U-BOLT	Uﾎﾞﾙﾄ	2	
21	234A8-42561		NUT	ﾅｯﾄ	4	
22	02000-20010		WASHER	ﾜｯｼｬ	4	
23	02010-20010		WASHER	ﾜｯｼｬ	4	
24	215E8-42231		PLUG	ﾌﾟﾗｸﾞ	2	
25	234A8-42571		NUT	ﾅｯﾄ	2	
26	01103-14040		BOLT	ﾎﾞﾙﾄ	2	
27	02011-00014		WASHER	ﾜｯｼｬ	2	
28	216G8-43151		BOLT	ﾎﾞﾙﾄ	2	
29	22517-40051		SHIM,T-0.2	ｼﾑ	4	
30	22717-40081		SHIM,T-0.5	ｼﾑ	4	
31	218G8-45931		CHAIN,LEAF VFHM360	ﾁｪｰﾝ	2	[INC32]
-	218G8-46011		CHAIN,LEAF VFHM400	ﾁｪｰﾝ	2	[INC32]
-	218G8-46091		CHAIN,LEAF VFHM435	ﾁｪｰﾝ	2	[INC32]
-	218G8-46191		CHAIN,LEAF VFHM480	ﾁｪｰﾝ	2	[INC32]
-	218G8-46251		CHAIN,LEAF VFHM500	ﾁｪｰﾝ	2	[INC32]
-	218G8-46331		CHAIN,LEAF VFHM540	ﾁｪｰﾝ	2	[INC32]
-	218G8-46351		CHAIN,LEAF VFHM550	ﾁｪｰﾝ	2	[INC32]
-	218G8-46471		CHAIN,LEAF VFHM600	ﾁｪｰﾝ	2	[INC32]
-	218G8-46611		CHAIN,LEAF VFHM650	ﾁｪｰﾝ	2	[INC32]
-	218G8-46751		CHAIN,LEAF VFHM700	ﾁｪｰﾝ	2	[INC32]
-	218G8-46851		CHAIN,LEAF VFHM750	ﾁｪｰﾝ	2	[INC32]
-	09001-08059		CHAIN,ROLLER VFHM360	ﾁｪｰﾝ	2	[FC][FCS35][FCS55][FCS45]
-	09001-08065		CHAIN,ROLLER VFHM400	ﾁｪｰﾝ	2	[FC][FCS35][FCS55][FCS45]
-	09001-08069		CHAIN,ROLLER VFHM435	ﾁｪｰﾝ	2	[FC][FCS35][FCS55][FCS45]
-	09001-08075		CHAIN,ROLLER VFHM480	ﾁｪｰﾝ	2	[FC][FCS35][FCS55][FCS45]
-	09001-08079		CHAIN,ROLLER VFHM500	ﾁｪｰﾝ	2	[FC][FCS35][FCS55][FCS45]
-	09001-08083		CHAIN,ROLLER VFHM540	ﾁｪｰﾝ	2	[FC][FCS35][FCS55][FCS45]
-	09001-08085		CHAIN,ROLLER VFHM550	ﾁｪｰﾝ	2	[FC][FCS35][FCS55][FCS45]
-	09001-08093		CHAIN,ROLLER VFHM600	ﾁｪｰﾝ	2	[FC][FCS35][FCS55][FCS45]
-	09001-08101		CHAIN,ROLLER VFHM650	ﾁｪｰﾝ	2	[FC][FCS35][FCS55][FCS45]
-	09001-08109		CHAIN,ROLLER VFHM700	ﾁｪｰﾝ	2	[FC][FCS35][FCS55][FCS45]
-	09001-08117		CHAIN,ROLLER VFHM750	ﾁｪｰﾝ	2	[FC][FCS35][FCS55][FCS45]
32	218G8-42701		LINK	ﾘﾝｸ	4	
33	218G8-42501		PIN,ANCHOR	ﾋﾟﾝ	2	
-	510F5-54051		PIN,ANCHOR	ﾋﾟﾝ	2	[FC][FCS35][FCS55][FCS45]
34	218G8-42511		PIN,ANCHOR	ﾋﾟﾝ	2	
-	510F5-54061		PIN,ANCHOR	ﾋﾟﾝ	2	[FC][FCS35][FCS55][FCS45]
35	22118-40181		NUT	ﾅｯﾄ	4	
36	01400-00014		NUT	ﾅｯﾄ	4	
37	02200-03030		PIN	ﾋﾟﾝ	4	
38	514A3-04221		COVER	ｶﾊﾞｰ	1	[EXE][EXN]
39	514A3-04201		COVER	ｶﾊﾞｰ	1	[EXE][EXN]
40	01100-16016		BOLT	ﾎﾞﾙﾄ	1	[EXE][EXN]

FIG.204 LIFT CYLINDER (REAR)[VFHM0A7]

(M7010820) リフトシリンダ

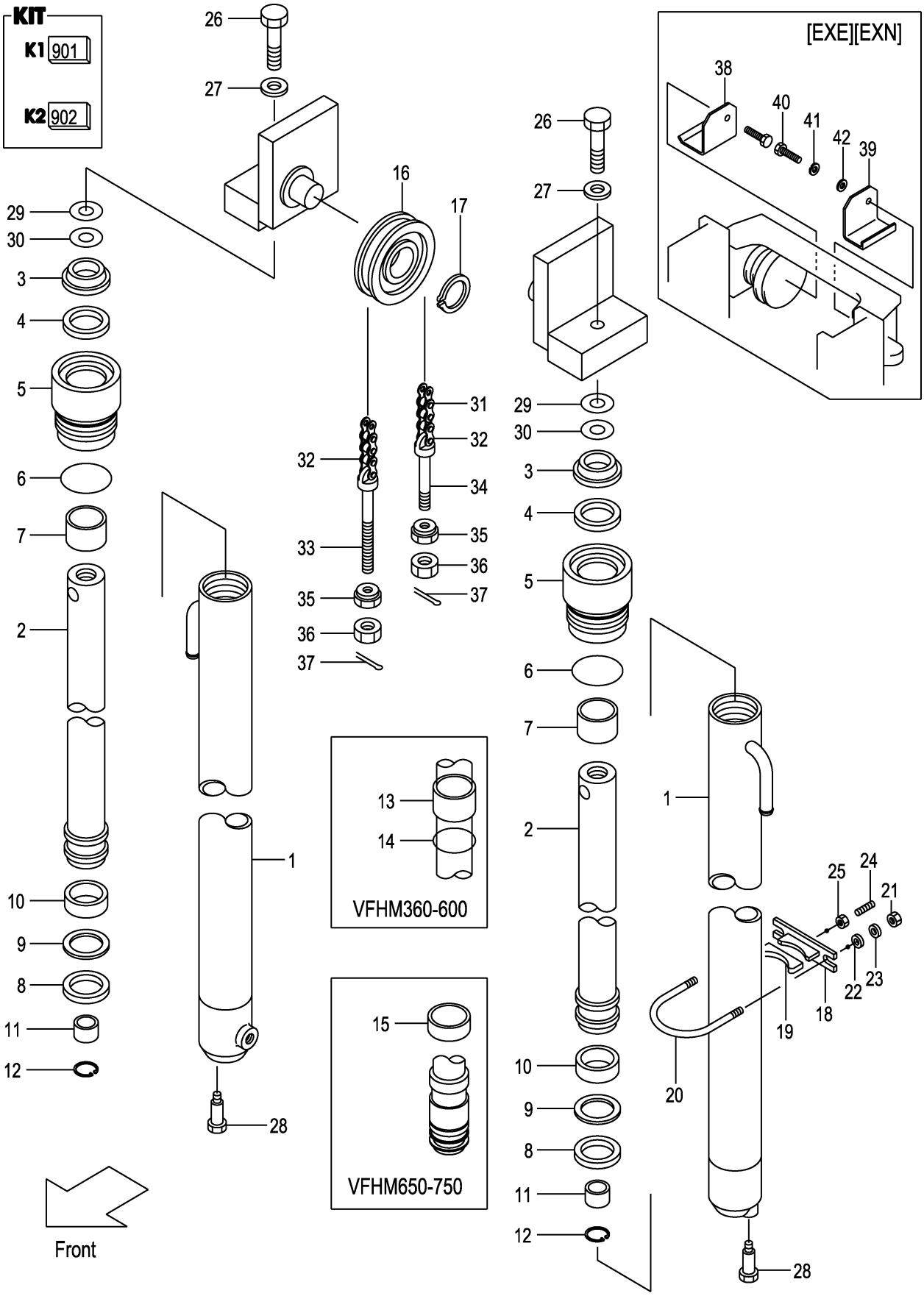

A:VFHM0A7(1.0T)
B:VFHM0A7(1.5T)
C:VFHM0A7(1.8T)

FIG.204
(M7010820)

Item No	Part No.	Mark	Description	Req'd	Remarks : Serial No.
41	02010-00016		WASHER ﾜｯｼｬ	1	[EXE][EXN]
42	02000-00016		WASHER ﾜｯｼｬ	1	[EXE][EXN]

FIG.205 MAST PIPING [VFHM0A7]

(M7010830) マストパイピング

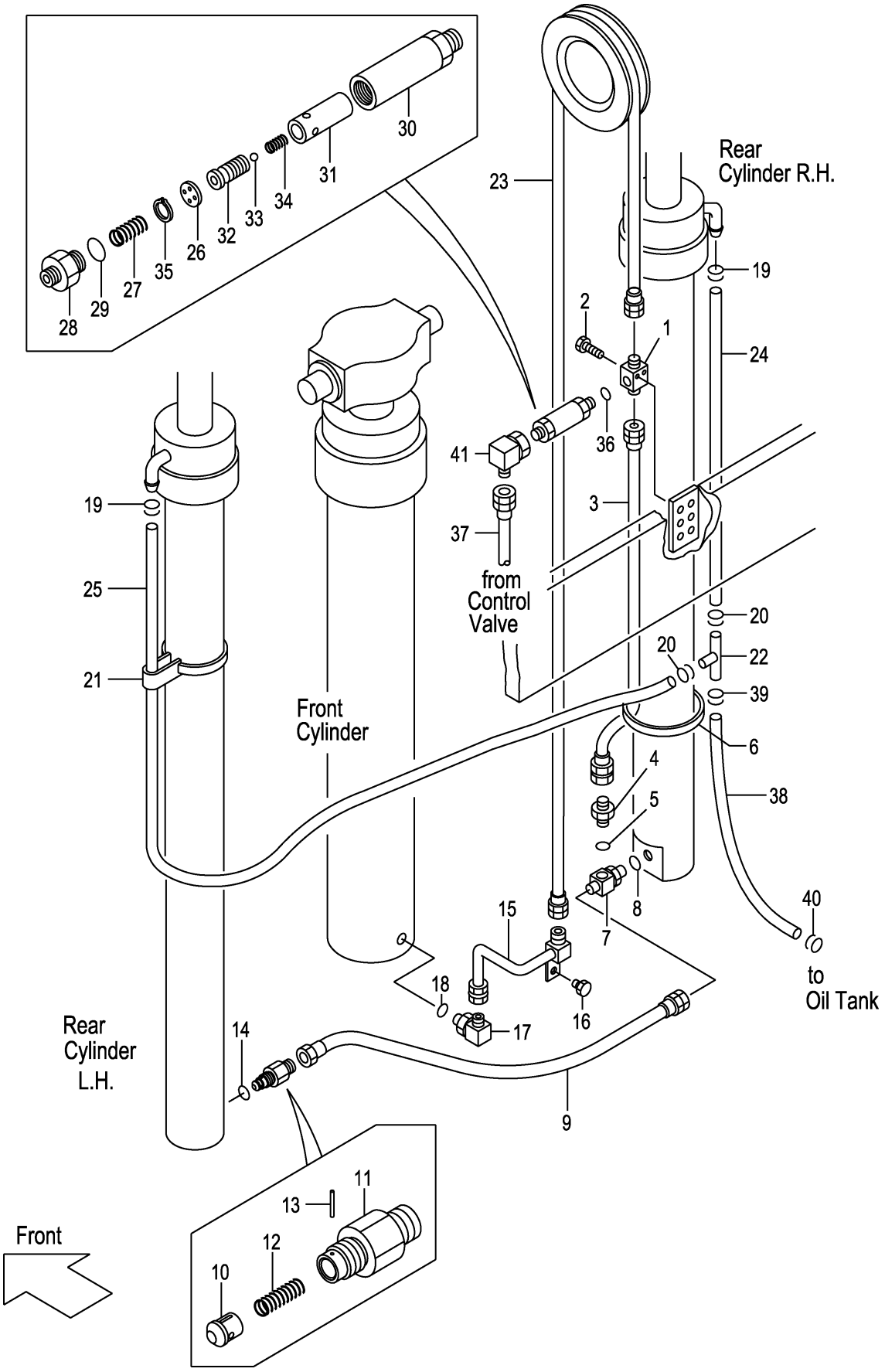

A:VFHM0A7(1.0T)
B:VFHM0A7(1.5T)
C:VFHM0A7(1.8T)

FIG.205
(M7010830)

Item No	Part No.	Mark	Description		Req'd	Remarks : Serial No.
1	229F0-94101		THREE-WAY	ｽﾘｰｳｴｲ	1	
2	01184-10040		BOLT & WASHER	ﾎﾞﾙﾄ&ﾜｯｼｬ	2	
3	212R0-91202		HOSE	ﾎｰｽ	1	
A1	04134-20404		NIPPLE-ASSY	ﾆｯﾌﾟﾙｱｯｾﾝ	1	INC.4,5
4	NO PART NO.	#	NIPPLE	ﾆｯﾌﾟﾙ	1	
5	03320-00180		O-RING	Oﾘﾝｸﾞ	1	
6	25790-94021		BAND	ﾊﾞﾝﾄﾞ	1	
A2	216G0-93101		THREE-WAY-ASSY	ｽﾘｰｳｪｲｱｯｾﾝ	1	INC.7,8
7	NO PART NO.	#	THREE-WAY	ｽﾘｰｳｴｲ	1	
8	03320-00140	*	O-RING	Oﾘﾝｸﾞ	1	
9	234A8-02201		HOSE	ﾎｰｽ	1	
A3	216G0-93201		VALVE-ASSY,CUT	ｶｯﾄﾊﾞﾙﾌﾞｱｯｾﾝ	1	INC.10-14
10	NO PART NO.	#	PISTON	ﾋﾟｽﾄﾝ	1	
11	NO PART NO.	#	NIPPLE	ﾆｯﾌﾟﾙ	1	
12	234A8-42611		SPRING	ｽﾌﾟﾘﾝｸﾞ	1	
13	02270-01014		PIN	ﾋﾟﾝ	1	
14	03320-00140	*	O-RING	Oﾘﾝｸﾞ	1	
15	211F0-93001		PIPE	ﾊﾟｲﾌﾟ	1	
16	01185-08016		BOLT & WASHER	ﾎﾞﾙﾄ&ﾜｯｼｬ	1	
A4	212R0-91301		ELBOW-ASSY	ｴﾙﾎﾞｱｯｾﾝ	1	INC.17,18
17	NO PART NO.	#	ELBOW	ｴﾙﾎﾞ	1	
18	03320-00180		O-RING	Oﾘﾝｸﾞ	1	
19	04911-00018		CLIP	ｸﾘｯﾌﾟ	2	
-	24329-46201		CLIP	ｸﾘｯﾌﾟ	2	[FC][RTL]
20	04911-00018		CLIP	ｸﾘｯﾌﾟ	2	
-	24329-46201		CLIP	ｸﾘｯﾌﾟ	2	[FC][RTL]
21	22N58-45001		BAND	ﾊﾞﾝﾄﾞ	2	
22	23679-45051		THREE-WAY	ｽﾘｰｳｴｲ	1	
-	53675-55051		THREE-WAY	ｽﾘｰｳｴｲ	1	[FC][RTL]
23	04601-44224		HOSE VFHM360	ﾎｰｽ	1	
-	04601-44249		HOSE VFHM400	ﾎｰｽ	1	
-	04601-44274		HOSE VFHM435	ﾎｰｽ	1	
-	04601-44303		HOSE VFHM480	ﾎｰｽ	1	
-	04601-44323		HOSE VFHM500	ﾎｰｽ	1	
-	04601-44347		HOSE VFHM540	ﾎｰｽ	1	
-	04601-44355		HOSE VFHM550	ﾎｰｽ	1	
-	04601-44391		HOSE VFHM600	ﾎｰｽ	1	
-	04601-44434		HOSE VFHM650	ﾎｰｽ	1	
-	04601-44477		HOSE VFHM700	ﾎｰｽ	1	
-	04601-44510		HOSE VFHM750	ﾎｰｽ	1	
24	23678-40100		HOSE VFHM360	ﾎｰｽ	1	
-	23678-40115		HOSE VFHM400	ﾎｰｽ	1	
-	23678-40125		HOSE VFHM435	ﾎｰｽ	1	
-	23678-40140		HOSE VFHM480	ﾎｰｽ	1	
-	23678-40150		HOSE VFHM500	ﾎｰｽ	1	
-	23678-40165		HOSE VFHM540	ﾎｰｽ	1	
-	23678-40170		HOSE VFHM550	ﾎｰｽ	1	
-	23678-40185		HOSE VFHM600	ﾎｰｽ	1	
-	23678-40210		HOSE VFHM650	ﾎｰｽ	1	
-	23678-40230		HOSE VFHM700	ﾎｰｽ	1	

FIG.205 MAST PIPING [VFHM0A7]

(M7010830) マストパイピング

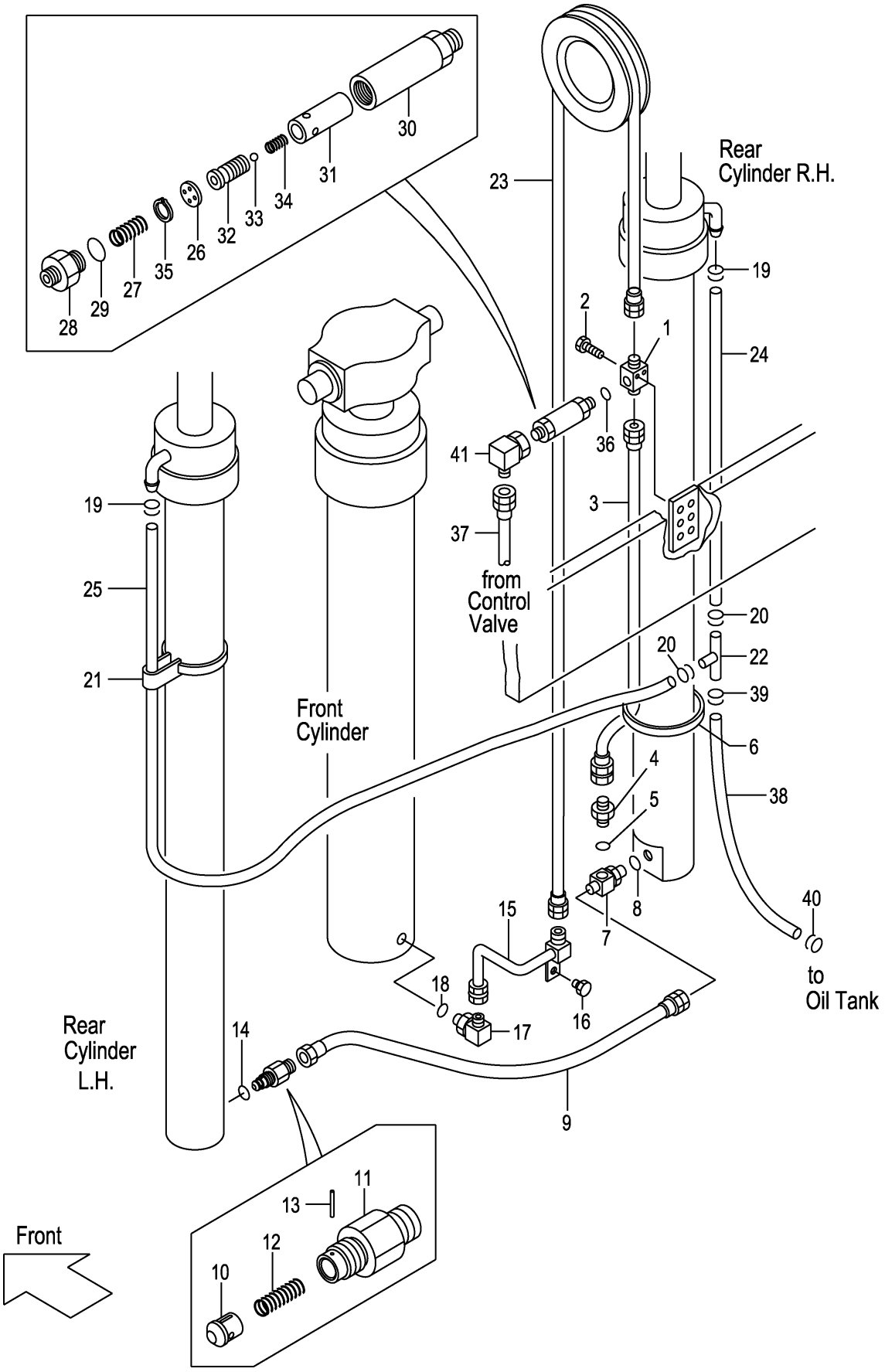

A:VFHM0A7(1.0T)
B:VFHM0A7(1.5T)
C:VFHM0A7(1.8T)

FIG.205
(M7010830)

Item No	Part No.	Mark	Description		Req'd	Remarks : Serial No.
-	23678-40245		HOSE VFHM750	ﾎｰｽ	1	
-	04710-04100		HOSE VFHM360	ﾎｰｽ	1	[FC][RTL]
-	04710-04115		HOSE VFHM400	ﾎｰｽ	1	[FC][RTL]
-	04710-04125		HOSE VFHM435	ﾎｰｽ	1	[FC][RTL]
-	04710-04140		HOSE VFHM480	ﾎｰｽ	1	[FC][RTL]
-	04710-04150		HOSE VFHM500	ﾎｰｽ	1	[FC][RTL]
-	04710-04165		HOSE VFHM540	ﾎｰｽ	1	[FC][RTL]
-	04710-04170		HOSE VFHM550	ﾎｰｽ	1	[FC][RTL]
-	04710-04185		HOSE VFHM600	ﾎｰｽ	1	[FC][RTL]
-	04710-04210		HOSE VFHM650	ﾎｰｽ	1	[FC][RTL]
-	04710-04230		HOSE VFHM700	ﾎｰｽ	1	[FC][RTL]
-	04710-04245		HOSE VFHM750	ﾎｰｽ	1	[FC][RTL]
25	23678-40150		HOSE VFHM360	ﾎｰｽ	1	
-	23678-40165		HOSE VFHM400	ﾎｰｽ	1	
-	23678-40175		HOSE VFHM435	ﾎｰｽ	1	
-	23678-40190		HOSE VFHM480	ﾎｰｽ	1	
-	23678-40200		HOSE VFHM500	ﾎｰｽ	1	
-	23678-40215		HOSE VFHM540	ﾎｰｽ	1	
-	23678-40220		HOSE VFHM550	ﾎｰｽ	1	
-	23678-40235		HOSE VFHM600	ﾎｰｽ	1	
-	23678-40260		HOSE VFHM650	ﾎｰｽ	1	
-	23678-40280		HOSE VFHM700	ﾎｰｽ	1	
-	23678-40295		HOSE VFHM750	ﾎｰｽ	1	
-	04710-04150		HOSE VFHM360	ﾎｰｽ	1	[FC][RTL]
-	04710-04165		HOSE VFHM400	ﾎｰｽ	1	[FC][RTL]
-	04710-04175		HOSE VFHM435	ﾎｰｽ	1	[FC][RTL]
-	04710-04190		HOSE VFHM480	ﾎｰｽ	1	[FC][RTL]
-	04710-04200		HOSE VFHM500	ﾎｰｽ	1	[FC][RTL]
-	04710-04215		HOSE VFHM540	ﾎｰｽ	1	[FC][RTL]
-	04710-04220		HOSE VFHM550	ﾎｰｽ	1	[FC][RTL]
-	04710-04235		HOSE VFHM600	ﾎｰｽ	1	[FC][RTL]
-	04710-04260		HOSE VFHM650	ﾎｰｽ	1	[FC][RTL]
-	04710-04280		HOSE VFHM700	ﾎｰｽ	1	[FC][RTL]
-	04710-04295		HOSE VFHM750	ﾎｰｽ	1	[FC][RTL]
A5	216G8-41001		REGULATOR-ASSY	ﾚｷﾞｭﾚｰﾀｱｯｾﾝ	1	INC.26-35
26	NO PART NO.	#	PLATE	ﾌﾟﾚｰﾄ	1	
27	27979-43101		SPRING	ｽﾌﾟﾘﾝｸﾞ	1	
28	NO PART NO.	#	NIPPLE	ﾆｯﾌﾟﾙ	1	
29	03300-00280		O-RING	Oﾘﾝｸﾞ	1	
30	NO PART NO.	#	CASE	ｹｰｽ	1	
31	NO PART NO.	#	SLEEVE	ｽﾘｰﾌﾞ	1	
32	NO PART NO.	#	PISTON	ﾋﾟｽﾄﾝ	1	
33	24459-42951		BALL,NYLON	ﾎﾞｰﾙ	1	
34	214A8-44151		SPRING	ｽﾌﾟﾘﾝｸﾞ	1	
35	02110-00018		RING,SNAP	ﾘﾝｸﾞ	1	
36	03320-00180		O-RING	Oﾘﾝｸﾞ	1	
37	277T0-92131		HOSE	ﾎｰｽ	1	
38	23678-40130		HOSE	ﾎｰｽ	1	
-	04710-04130		HOSE	ﾎｰｽ	1	[FC][RTL]
39	04911-00018		CLIP	ｸﾘｯﾌﾟ	1	

FIG.205 MAST PIPING [VFHM0A7]

(M7010830) マストパイピング

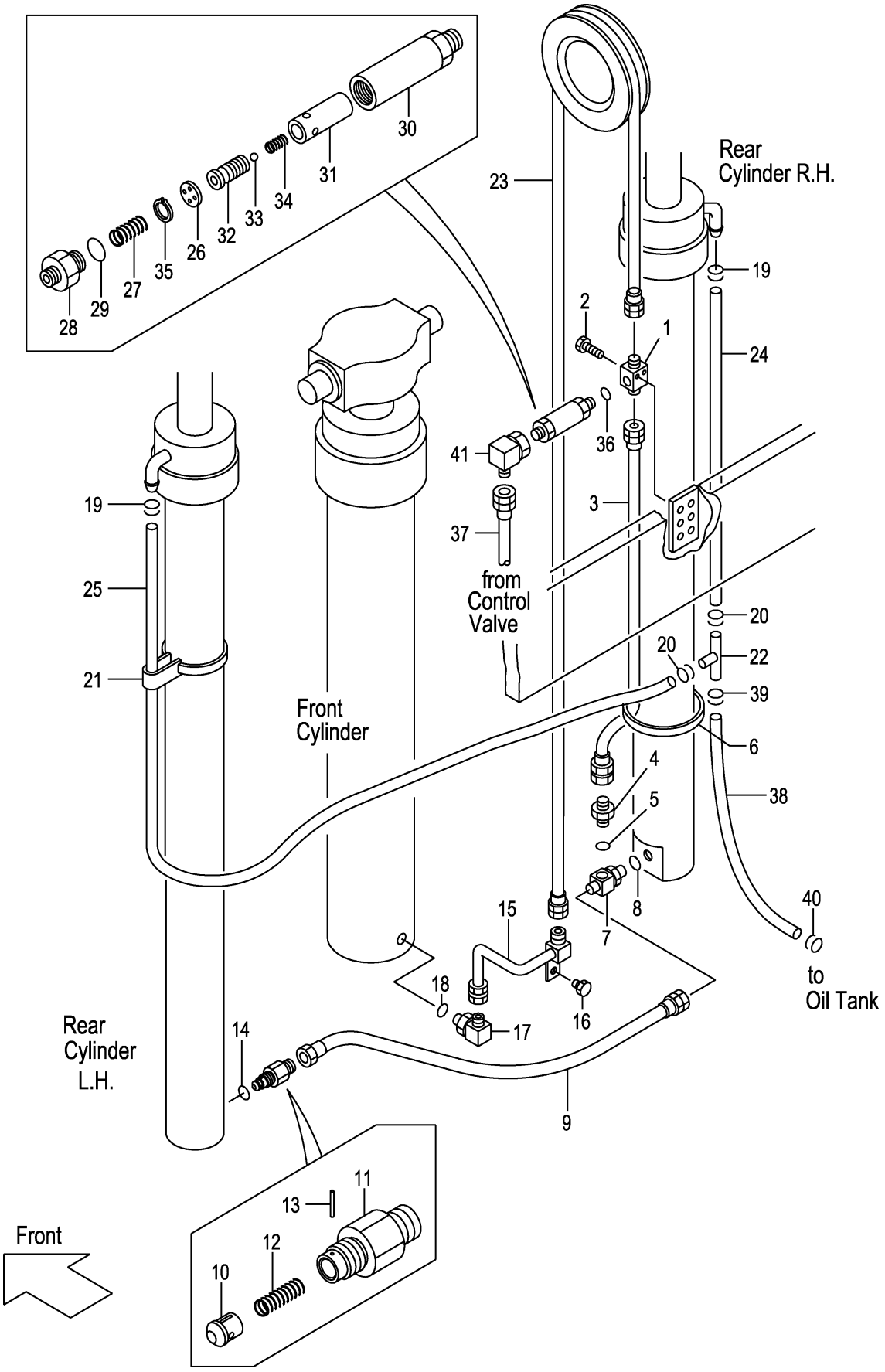

A:VFHM0A7(1.0T)
B:VFHM0A7(1.5T)
C:VFHM0A7(1.8T)

FIG.205
(M7010830)

Item No	Part No.	Mark	Description	Req'd	Remarks : Serial No.
-	24329-46201		CLIP ｸﾘｯﾌﾟ	1	[FC][RTL]
40	04914-00016		CLIP ｸﾘｯﾌﾟ	1	
-	04911-00021		CLIP ｸﾘｯﾌﾟ	1	[FC][RTL]
41	62150-14321		ELBOW ｴﾙﾎﾞ	1	

PARTS NUMBER INDEX

Part No.	Fig.No.	Part No.	Fig.No.	Part No.	Fig.No.	Part No.	Fig.No.
B-B6111-35039	190	B-B6567-39702	204	B-B6717-90602	196	B-C0013-31638	145
B-B6111-35039	190	B-B6567-39801	204	B-B6717-90701	196	B-C0013-31638	166
B-B6111-35039	190	B-B6567-39802	204	B-B6717-90702	196	B-C0013-31638	166
B-B6111-35039	190	B-B6567-39901	204	B-B6717-90801	196	B-C0213-31013	139
B-B6111-35039	190	B-B6567-39902	204	B-B6717-90802	196	B-C0213-31013	140
B-B6111-35039	204	B-B6567-40001	204	B-B6717-90901	196	B-C0213-31013	141
B-B6111-35047	204	B-B6567-40002	204	B-B6717-90902	196	B-C0213-31013	142
B-B6111-35049	190	B-B6567-40101	204	B-B6717-91001	196	B-C0213-31013	157
B-B6111-35049	190	B-B6567-40102	204	B-B6717-91002	196	B-C0213-31026	139
B-B6111-35049	204	B-B6567-40201	204	B-B6717-91101	196	B-C0213-31026	140
B-B6111-35053	204	B-B6567-40202	204	B-B6717-91102	196	B-C0213-31026	141
B-B6181-70007	196	B-B6567-40301	204	B-B6717-91201	196	B-C0213-31026	142
B-B6181-70007	203	B-B6567-40302	204	B-B6717-91202	196	B-C0213-31026	157
B-B6341-01401	172	B-B6567-40401	204	B-B6717-91301	196	B-C0213-31033	139
B-B6351-01401	172	B-B6567-40402	204	B-B6717-91302	196	B-C0213-31033	140
B-B6521-90004	196	B-B6567-40501	204	B-B6717-91401	196	B-C0213-31033	141
B-B6521-90004	203	B-B6567-40502	204	B-B6717-91402	196	B-C0213-31033	142
B-B6551-91008	190	B-B6567-40601	204	B-B6717-91501	196	B-C0213-31033	159
B-B6551-91008	204	B-B6567-40602	204	B-B6717-91502	196	B-C0213-31259	140
B-B6567-32601	190	B-B670A-00009	196	B-B6717-91601	196	B-C0213-31259	141
B-B6567-32602	190	B-B670A-00009	203	B-B6717-91602	196	B-C0213-31259	142
B-B6567-32701	190	B-B670B-00024	196	B-B6817-94301	196	B-C0213-31259	160
B-B6567-32702	190	B-B670B-00024	203	B-B6817-94302	196	B-C0213-31260	140
B-B6567-32801	190	B-B6711-00001	196	B-B6817-94401	196	B-C0213-31260	163
B-B6567-32802	190	B-B6711-00001	203	B-B6817-94402	196	B-C0213-31272	139
B-B6567-32901	190	B-B6717-86101	196	B-B6983-70007	196	B-C0213-31272	160
B-B6567-32902	190	B-B6717-86101	203	B-B9683-70007	203	B-C0213-31273	141
B-B6567-33001	190	B-B6717-86102	196	B-C0001-32029	158	B-C0213-31273	142
B-B6567-33002	190	B-B6717-86102	203	B-C0001-32029	161	B-C0213-31273	163
B-B6567-33101	190	B-B6717-86201	196	B-C0001-32029	166	B-C0213-31273	163
B-B6567-33102	190	B-B6717-86201	203	B-C0001-32029	166	B-C0213-31274	141
B-B6567-33201	190	B-B6717-86202	196	B-C0001-32503	161	B-C0213-31274	142
B-B6567-33202	190	B-B6717-86202	203	B-C0001-32504	158	B-C0213-31274	164
B-B6567-33301	190	B-B6717-86301	196	B-C0003-06808	158	B-C0213-31275	140
B-B6567-33302	190	B-B6717-86301	203	B-C0003-30301	140	B-C0213-31275	141
B-B6567-33401	190	B-B6717-86302	196	B-C0003-30301	141	B-C0213-31275	142
B-B6567-33402	190	B-B6717-86302	203	B-C0003-30301	142	B-C0213-31275	162
B-B6567-33501	190	B-B6717-86401	196	B-C0003-30301	144	B-C0213-31276	139
B-B6567-33502	190	B-B6717-86401	203	B-C0003-30301	145	B-C0213-31276	162
B-B6567-33601	190	B-B6717-86402	196	B-C0003-30301	157	B-C0733-40010	165
B-B6567-33602	190	B-B6717-86402	203	B-C001B-30076	161	B-C0853-00012	157
B-B6567-33701	190	B-B6717-86501	196	B-C001B-30076	166	B-C0853-00013	157
B-B6567-33702	190	B-B6717-86501	203	B-C001B-30076	166	B-C0853-00016	157
B-B6567-33801	190	B-B6717-86502	196	B-C001B-30087	158	B-C0853-00016	159
B-B6567-33802	190	B-B6717-86502	203	B-C0013-30045	143	B-C4300-22001	196
B-B6567-33901	190	B-B6717-86601	196	B-C0013-30045	144	B-C4300-22001	203
B-B6567-33902	190	B-B6717-86601	203	B-C0013-30045	145	B-T1111-08101	139
B-B6567-34001	190	B-B6717-86602	196	B-C0013-30045	165	B-T1111-10101	139
B-B6567-34002	190	B-B6717-86602	203	B-C0013-30203	143	B-T1121-08107	140
B-B6567-34101	190	B-B6717-86701	203	B-C0013-30203	144	B-T1121-08108	141
B-B6567-34102	190	B-B6717-86702	203	B-C0013-30203	145	B-T1121-08110	142
B-B6567-34201	190	B-B6717-86801	203	B-C0013-31451	143	B-T1121-10111	140
B-B6567-34202	190	B-B6717-86802	203	B-C0013-31451	144	B-T1121-10112	141
B-B6567-34301	190	B-B6717-86901	203	B-C0013-31451	145	B-T1121-10113	142
B-B6567-34302	190	B-B6717-86902	203	B-C0013-31451	161	B-T1151-19301	157
B-B6567-34401	190	B-B6717-87001	203	B-C0013-31629	143	B-T1151-21303	157
B-B6567-34402	190	B-B6717-87002	203	B-C0013-31629	144	B-T1151-21303	159
B-B6567-39601	204	B-B6717-87101	203	B-C0013-31629	145	B-T1152-21302	157
B-B6567-39602	204	B-B6717-87102	203	B-C0013-31629	158	B-T1152-27502	165
B-B6567-39701	204	B-B6717-90601	196	B-C0013-31638	144	B-T1171-09503	157

PARTS NUMBER INDEX

Part No.	Fig.No.	Part No.	Fig.No.	Part No.	Fig.No.	Part No.	Fig.No.
B-T1171-09503	165	B-21001-90435	158	B-21011-31702	162	B-30131-03003	172
B-T1172-00608	159	B-21001-90435	165	B-21011-31702	163	B-30131-35017	190
B-T1331-11001	161	B-21003-00190	157	B-21011-31702	163	B-30131-35017	204
B-T1331-11001	166	B-21003-00190	159	B-21011-31702	164	B-30131-45018	190
B-T1331-11001	166	B-21003-00381	157	B-21011-32047	162	B-30131-45018	204
B-T1331-11003	158	B-21003-00381	159	B-21011-32404	160	B-30131-55009	196
B-T1411-06001	157	B-21003-00383	157	B-21011-32404	161	B-30131-55009	203
B-T1411-06001	165	B-21003-00383	159	B-21011-32404	162	B-30141-35012	172
B-T1411-16002	157	B-2101A-30016	143	B-21011-32404	163	B-30141-91049	190
B-T1411-17003	157	B-2101A-30016	144	B-21011-32404	163	B-30141-91049	204
B-T1411-17004	158	B-2101A-30016	145	B-21011-32404	164	B-30151-03006	172
B-T1441-04001	158	B-2101B-30124	165	B-21011-32404	166	B-30161-45046	190
B-T1441-04001	161	B-2101B-31009	165	B-21011-32404	166	B-30161-45046	204
B-T1441-04001	166	B-21011-30507	157	B-21011-32495	165	B-30161-91773	190
B-T1441-04001	166	B-21011-30507	159	B-21011-32801	157	B-30161-91773	204
B-T1461-03002	158	B-21011-30507	163	B-21011-32801	159	B-30191-30025	172
B-T1461-03002	161	B-21011-30507	163	B-21011-32801	160	B-30191-35025	190
B-T1461-03002	166	B-21011-30507	164	B-21011-32801	162	B-30191-35025	204
B-T1461-03002	166	B-21011-30528	160	B-21011-32801	163	B-30191-55050	196
B-T1461-05002	158	B-21011-30528	162	B-21011-32801	163	B-30191-55050	203
B-T1461-05004	157	B-21011-30603	157	B-21011-32801	164	B-30311-01403	172
B-T1461-10014	157	B-21011-30603	159	B-21011-36502	158	B-30421-30005	172
B-T1461-16006	158	B-21011-30603	160	B-21011-36502	165	B-30431-35009	172
B-T1461-16006	161	B-21011-30603	162	B-21013-30681	158	B-3045A-00020	190
B-T1461-16006	166	B-21011-30603	163	B-21013-30697	140	B-3045A-00020	204
B-T1461-16006	166	B-21011-30603	163	B-21013-30697	141	B-3045B-00026	190
B-2093B-92002	165	B-21011-30603	164	B-21013-30697	142	B-3045B-00026	204
B-20931-70503	157	B-21011-30604	160	B-21021-30114	144	B-30461-45039	190
B-20931-70503	159	B-21011-30604	161	B-21021-30115	144	B-30461-45039	204
B-21001-00035	157	B-21011-30604	162	B-21031-30107	145	B-3065B-00139	172
B-21001-00035	158	B-21011-30604	163	B-21041-30119	145	B-30776-00106	204
B-21001-00036	139	B-21011-30604	163	B-21111-30515	157	B-30961-03012	172
B-21001-00036	140	B-21011-30604	164	B-21111-30515	159	B-30961-03512	190
B-21001-00036	141	B-21011-30604	166	B-21111-33114	157	B-30961-03512	204
B-21001-00036	142	B-21011-30604	166	B-21111-33114	159	B-30961-55013	196
B-21001-00036	157	B-21011-30618	160	B-21641-10957	165	B-30961-55013	203
B-21001-00036	159	B-21011-30618	161	B-21641-11002	165	B-91111-60102	157
B-21001-00036	165	B-21011-30618	162	B-21731-30304	165	B-91111-60102	159
B-21001-00106	158	B-21011-30702	157	B-21731-30306	157	B-91111-60102	160
B-21001-00106	160	B-21011-30702	159	B-21731-30306	159	B-91111-60102	162
B-21001-00106	161	B-21011-30702	160	B-21731-30306	165	B-91111-60102	163
B-21001-00106	162	B-21011-30702	162	B-21731-30406	157	B-91111-60102	163
B-21001-00106	163	B-21011-30702	163	B-21731-30406	159	B-91111-60102	164
B-21001-00106	163	B-21011-30702	163	B-21731-30406	165	B-91511-08180	157
B-21001-00106	164	B-21011-30702	164	B-21731-30502	157	B-91511-08180	159
B-21001-00106	165	B-21011-30740	158	B-21731-30502	159	B-91511-08180	165
B-21001-00106	166	B-21011-30740	161	B-21731-30502	165	B-92703-05101	158
B-21001-00106	166	B-21011-30740	166	B-21731-30703	157	B-92703-05101	161
B-21001-00128	158	B-21011-30740	166	B-21731-30703	159	B-92703-05101	166
B-21001-00689	157	B-21011-31011	157	B-21731-30703	165	B-92703-05101	166
B-21001-00689	159	B-21011-31011	159	B-21731-30802	165	B-92703-06181	157
B-21001-00689	160	B-21011-31011	160	B-21731-40501	157	B-92703-06181	158
B-21001-00689	162	B-21011-31011	163	B-21731-40501	159	B-92703-06181	159
B-21001-00689	163	B-21011-31011	163	B-25010-13104	165	B-92703-06181	160
B-21001-00689	163	B-21011-31011	164	B-25513-10158	158	B-92703-06181	161
B-21001-00689	164	B-21011-31107	143	B-25513-10158	161	B-92703-06181	162
B-21001-01452	165	B-21011-31108	143	B-25513-10158	166	B-92703-06181	163
B-21001-90112	165	B-21011-31702	157	B-25513-10158	166	B-92703-06181	163
B-21001-90434	165	B-21011-31702	159	B-26570-30115	196	B-92703-06181	164
B-21001-90435	157	B-21011-31702	160	B-26570-30115	203	B-92703-06181	165

PARTS NUMBER INDEX

Part No.	Fig.No.	Part No.	Fig.No.	Part No.	Fig.No.	Part No.	Fig.No.
B-92703-06181	166	B-95151-00900	166	C-52-11201-01270	65	01100-10025	108
B-92703-06181	166	B-95151-02400	158	C-52-11204-69010	65	01100-10025	109
B-93118-08652	140	B-95151-02400	161	C-52-30780-02340	65	01100-10030	110
B-93118-08652	141	B-95151-02400	166	C-90-0527-0616	65	01100-10050	48
B-93118-08652	142	B-95151-02400	166	C-90-9200-0800	65	01100-10050	49
B-93118-08652	143	B-95151-03500	190	W-K2PK-M	185	01100-12020	101
B-93118-08652	144	B-95151-03500	204	W-K2PK-M	192	01100-14025	187
B-93118-08652	145	B-95151-07000	196	W-K2PK-M	199	01100-14025	194
B-93128-10082	140	B-95151-07000	203	Z-8-94132-674-0	8	01100-14025	201
B-93128-10082	141	B-95713-05500	172	Z-8-94132-675-0	8	01100-14030	187
B-93128-10082	142	B-96111-10613	172	Z-8-94367-294-0	8	01100-14030	187
B-93128-10082	143	B-96321-05550	165	Z-8-94367-956-0	8	01100-14030	194
B-93128-10082	144	B-97123-01111	143	Z-8-94367-957-0	8	01100-14030	194
B-93128-10082	145	B-97123-01111	144	01030-04008	70	01100-14030	201
B-93364-08052	157	B-97123-01111	145	01030-04014	35	01100-14030	201
B-93364-08052	159	B-97123-01111	165	01030-04018	20	01100-14035	187
B-93364-08052	165	B-97123-02111	165	01030-04018	23	01100-14035	194
B-94341-08162	139	B-97161-03121	157	01030-04018	24	01100-14035	201
B-94341-08162	157	B-97161-04161	159	01030-04018	25	01100-14040	71
B-94341-08162	159	BK-8104209010	55	01030-04018	26	01100-16016	190
B-94341-10202	139	BK-81431A4700	55	01030-04020	41	01100-16016	196
B-94721-22101	196	C-K2-11036-83012	65	01030-05008	70	01100-16016	203
B-94721-22101	203	C-K2-11036-83022	65	01030-05055	21	01100-16016	204
B-95111-01200	157	C-11452-0H7-BF	174	01030-06010	70	01100-16020	124
B-95111-01200	159	C-11452-0H7-BF	176	01030-06012	180	01100-16025	124
B-95111-01200	165	C-11452-0H7-D	174	01030-06025	189	01100-16035	96
B-95111-02200	158	C-11452-0H7-D	175	01033-05014	15	01100-16060	196
B-95111-02200	161	C-11452-0H7-E	174	01033-05014	16	01100-16060	202
B-95111-02200	166	C-11452-0H7-E	176	01043-03010	12	01100-16060	203
B-95111-02200	166	C-11452-0H7-S	174	01066-08008	57	01100-16065	196
B-95112-05500	172	C-11452-0H7-S	176	01066-10012	172	01100-16065	203
B-95113-00800	165	C-11452-0J7-C	174	01066-10012	172	01101-10130	179
B-95113-01000	139	C-11452-0J7-C	176	01100-05016	132	01103-08016	48
B-95113-01000	140	C-11452-0J7-P	174	01100-06010	156	01103-08016	51
B-95113-01000	141	C-11452-0J7-P	176	01100-06010	181	01103-08016	64
B-95113-01000	142	C-11452-0J7-R	174	01100-06020	41	01103-08016	70
B-95113-01400	157	C-11452-0J7-R	176	01100-06050	20	01103-08020	52
B-95113-01800	157	C-51-B2101-02322	65	01100-06050	23	01103-08030	58
B-95113-01800	158	C-52-10901-64550	65	01100-06050	24	01103-08040	58
B-95113-01800	159	C-52-10901-64560	65	01100-06050	25	01103-10020	196
B-95113-01800	165	C-52-10906-04160	65	01100-06050	26	01103-10020	203
B-95113-02400	165	C-52-10910-05150	65	01100-08020	20	01103-10030	54
B-95121-06500	172	C-52-10927-04130	65	01100-08020	23	01103-10030	58
B-95123-06500	196	C-52-11003-02380	65	01100-08020	24	01103-10035	40
B-95123-06500	203	C-52-11003-04010	65	01100-08020	25	01103-10040	52
B-95133-00500	160	C-52-11003-05140	65	01100-08020	26	01103-10040	58
B-95133-00500	161	C-52-11003-64530	65	01100-08020	29	01103-10045	186
B-95133-00500	162	C-52-11005-34500	65	01100-08020	29	01103-10045	193
B-95151-00700	158	C-52-11005-44500	65	01100-08020	29	01103-10045	200
B-95151-00700	161	C-52-11029-52000	65	01100-08020	43	01103-10060	58
B-95151-00700	166	C-52-11031-11001	65	01100-08020	44	01103-10065	54
B-95151-00700	166	C-52-11031-21001	65	01100-08020	50	01103-12025	1
B-95151-00800	158	C-52-11036-15160	65	01100-08020	54	01103-12030	1
B-95151-00800	161	C-52-11036-24603	65	01100-08025	31	01103-12035	190
B-95151-00800	166	C-52-11036-25160	65	01100-08025	50	01103-14040	197
B-95151-00800	166	C-52-11036-54070	65	01100-08025	103	01103-14040	204
B-95151-00900	158	C-52-11036-54540	65	01100-08030	9	01103-14065	188
B-95151-00900	161	C-52-11044-13300	65	01100-08050	4	01103-14065	195
B-95151-00900	165	C-52-11044-23300	65	01100-10016	182	01103-14065	202
B-95151-00900	166	C-52-11101-04111	65	01100-10025	107	01106-10020	1

Part No.	Fig.No.	Part No.	Fig.No.	Part No.	Fig.No.	Part No.	Fig.No.
01106-10030	64	01183-08016	108	01185-08016	183	01400-00008	182
01106-10035	59	01183-08016	125	01185-08016	205	01400-00010	1
01106-10060	64	01183-08016	156	01185-08020	10	01400-00010	48
01109-12025	124	01183-08016	183	01185-08020	33	01400-00010	49
01110-30090	122	01183-08020	33	01185-08020	50	01400-00010	52
01110-30090	123	01183-08020	178	01185-08020	179	01400-00010	106
01110-30150	122	01183-08020	183	01185-08020	182	01400-00010	109
01110-30150	123	01183-08025	170	01185-08020	182	01400-00010	110
01113-10035	68	01183-08025	179	01185-08020	184	01400-00010	167
01113-30160	123	01184-10016	52	01185-08025	40	01400-00012	1
01113-30190	123	01184-10020	197	01185-08025	46	01400-00012	29
01120-10040	106	01184-10025	117	01185-08025	47	01400-00012	29
01120-10040	108	01184-10030	48	01185-08030	128	01400-00012	43
01123-10045	52	01184-10030	49	01185-08065	180	01400-00012	43
01141-06012	70	01184-10030	109	01185-10016	128	01400-00012	44
01170-05045	58	01184-10030	110	01186-10025	156	01400-00012	96
01171-06025	98	01184-10040	205	01186-10065	182	01400-00014	190
01171-06025	99	01184-12025	186	01186-12025	98	01400-00014	190
01181-06020	156	01184-12025	189	01186-12025	99	01400-00014	196
01181-08016	126	01184-12025	189	01186-12025	124	01400-00014	203
01182-08025	10	01184-12025	193	01186-12030	29	01400-00014	204
01183-05012	184	01184-12025	200	01186-12030	29	01400-10012	60
01183-05012	184	01184-12030	113	01186-12030	43	01400-10012	60
01183-06010	17	01185-04012	12	01186-12030	43	01400-10012	89
01183-06010	18	01185-06012	109	01186-12030	44	01400-10012	91
01183-06010	109	01185-06012	110	01186-12035	113	01400-10012	93
01183-06010	110	01185-06012	178	01213-10025	50	01400-10012	95
01183-06012	42	01185-06020	182	01400-00004	41	01400-10020	59
01183-06012	43	01185-08012	183	01400-00005	132	01400-20010	11
01183-06012	44	01185-08016	2	01400-00006	19	01402-00006	50
01183-06012	106	01185-08016	5	01400-00006	41	01402-00008	31
01183-06012	147	01185-08016	6	01400-00006	103	01402-00008	50
01183-06012	148	01185-08016	17	01400-00006	125	01402-00008	103
01183-06012	149	01185-08016	18	01400-00006	127	01402-00008	114
01183-06012	150	01185-08016	19	01400-00006	133	01402-00008	115
01183-06016	17	01185-08016	22	01400-00006	156	01402-00008	116
01183-06016	17	01185-08016	22	01400-00006	182	01402-00010	107
01183-06016	18	01185-08016	23	01400-00008	10	01402-00010	108
01183-06016	18	01185-08016	23	01400-00008	23	01402-00010	109
01183-06016	183	01185-08016	23	01400-00008	23	01402-00010	138
01183-06016	198	01185-08016	24	01400-00008	24	01402-00010	185
01183-06016	198	01185-08016	24	01400-00008	25	01402-00010	192
01183-06016	198	01185-08016	25	01400-00008	25	01402-00010	199
01183-06016	198	01185-08016	25	01400-00008	29	01402-10012	74
01183-06020	189	01185-08016	25	01400-00008	29	01402-10012	77
01183-06020	189	01185-08016	26	01400-00008	29	01402-10012	80
01183-08012	32	01185-08016	31	01400-00008	31	01402-10012	83
01183-08012	50	01185-08016	32	01400-00008	35	01402-10014	66
01183-08012	132	01185-08016	33	01400-00008	42	01412-00024	70
01183-08012	147	01185-08016	54	01400-00008	43	02000-00004	41
01183-08012	148	01185-08016	64	01400-00008	44	02000-00004	70
01183-08012	149	01185-08016	70	01400-00008	44	02000-00005	106
01183-08012	150	01185-08016	103	01400-00008	46	02000-00005	147
01183-08016	8	01185-08016	106	01400-00008	47	02000-00005	148
01183-08016	17	01185-08016	125	01400-00008	58	02000-00005	149
01183-08016	18	01185-08016	128	01400-00008	70	02000-00005	150
01183-08016	32	01185-08016	130	01400-00008	134	02000-00006	19
01183-08016	32	01185-08016	131	01400-00008	135	02000-00006	50
01183-08016	51	01185-08016	133	01400-00008	136	02000-00006	103
01183-08016	107	01185-08016	168	01400-00008	137	02000-00006	106

Part No.	Fig.No.	Part No.	Fig.No.	Part No.	Fig.No.	Part No.	Fig.No.
02000-00006	106	02010-00006	127	02011-00010	40	02200-16015	106
02000-00006	108	02010-00006	133	02011-00010	52	02200-16015	106
02000-00006	127	02010-00006	156	02011-00010	54	02200-16015	108
02000-00006	156	02010-00006	181	02011-00010	58	02212-06016	58
02000-00006	189	02010-00008	9	02011-00010	59	02212-10020	59
02000-00008	4	02010-00008	10	02011-00010	64	02212-10020	64
02000-00008	10	02010-00008	35	02011-00010	68	02212-12020	52
02000-00008	70	02010-00008	46	02011-00010	196	02212-12020	54
02000-00008	70	02010-00008	47	02011-00010	203	02262-06015	106
02000-00008	109	02010-00008	70	02011-00012	1	02262-06020	50
02000-00008	110	02010-00008	134	02011-00012	74	02262-06020	108
02000-00008	125	02010-00008	135	02011-00012	77	02262-08025	109
02000-00008	132	02010-00008	136	02011-00012	80	02262-08025	110
02000-00008	179	02010-00008	137	02011-00012	83	02262-08045	132
02000-00008	190	02010-00008	190	02011-00012	89	02270-01014	191
02000-00010	7	02010-00010	11	02011-00012	91	02270-01014	198
02000-00010	9	02010-00010	48	02011-00012	93	02270-01014	205
02000-00010	11	02010-00010	49	02011-00012	95	02270-04020	58
02000-00010	125	02010-00010	110	02011-00014	197	02270-04035	58
02000-00010	138	02010-00010	138	02011-00014	204	02432-01008	174
02000-00010	167	02010-00010	167	02011-00020	59	02432-01008	200
02000-00010	190	02010-00012	96	02013-00012	124	03000-06207	53
02000-00012	29	02010-00012	101	02100-00020	52	03000-06208	53
02000-00012	29	02010-00014	71	02100-00020	66	03000-06208	53
02000-00012	43	02010-00014	187	02100-00022	52	03000-06208	56
02000-00012	43	02010-00014	187	02100-00025	51	03000-06210	63
02000-00012	44	02010-00014	188	02100-00030	53	03000-06306	53
02000-00012	60	02010-00014	194	02100-00035	190	03000-06306	53
02000-00012	66	02010-00014	194	02100-00035	190	03000-06306	56
02000-00012	96	02010-00014	195	02100-00035	196	03000-06306	57
02000-00012	106	02010-00014	201	02100-00035	203	03003-06306	53
02000-00012	189	02010-00014	201	02100-00040	57	03020-06904	66
02000-00012	189	02010-00014	202	02100-00040	204	03071-30206	70
02000-00014	29	02010-00016	96	02110-00018	191	03071-30213	60
02000-00014	29	02010-00016	124	02110-00018	198	03190-00006	197
02000-00014	43	02010-00016	190	02110-00018	205	03190-00013	52
02000-00014	43	02010-00016	196	02110-00022	58	03192-00012	60
02000-00014	44	02010-00016	196	02110-00022	58	03192-10012	60
02000-00014	66	02010-00016	202	02110-00030	58	03192-30072	53
02000-00016	190	02010-00016	203	02110-00037	66	03300-00160	52
02000-00016	196	02010-00016	203	02120-00038	53	03300-00180	52
02000-00016	196	02010-00016	204	02120-00040	53	03300-00280	191
02000-00016	202	02010-00030	122	02120-00040	56	03300-00280	198
02000-00016	203	02010-00030	123	02121-00058	57	03300-00280	205
02000-00016	203	02010-10006	70	02200-02020	109	03310-00300	52
02000-00016	204	02010-20010	73	02200-02020	110	03320-00110	69
02000-00022	52	02010-20010	197	02200-02020	132	03320-00110	146
02000-00024	51	02010-20010	197	02200-03020	106	03320-00140	69
02000-00024	70	02010-20010	204	02200-03030	190	03320-00140	69
02000-20010	179	02010-20012	188	02200-03030	190	03320-00140	69
02000-20010	197	02010-20012	195	02200-03030	196	03320-00140	69
02000-20010	197	02010-20012	202	02200-03030	203	03320-00140	146
02000-20010	204	02011-00008	48	02200-03030	204	03320-00140	146
02001-00012	124	02011-00008	51	02200-05045	70	03320-00140	168
02010-00004	35	02011-00008	52	02200-16010	50	03320-00140	171
02010-00004	41	02011-00008	58	02200-16010	106	03320-00140	171
02010-00006	19	02011-00008	58	02200-16010	147	03320-00140	191
02010-00006	41	02011-00008	64	02200-16010	148	03320-00140	191
02010-00006	103	02011-00008	70	02200-16010	149	03320-00140	198
02010-00006	125	02011-00010	1	02200-16010	150	03320-00140	198

PARTS NUMBER INDEX

Part No.	Fig.No.	Part No.	Fig.No.	Part No.	Fig.No.	Part No.	Fig.No.
03320-00140	198	04710-04160	191	04911-00021	191	06007-65010	78
03320-00140	205	04710-04160	191	04911-00021	205	06007-65010	79
03320-00140	205	04710-04165	191	04911-00022	34	06007-65010	87
03320-00180	138	04710-04165	191	04911-00023	171	06007-65010	87
03320-00180	146	04710-04165	205	04911-00036	167	06701-45012	85
03320-00180	146	04710-04165	205	04911-00040	5	06701-50008	89
03320-00180	146	04710-04170	205	04911-00044	5	06701-50008	90
03320-00180	191	04710-04175	191	04911-00044	167	06701-50008	91
03320-00180	197	04710-04175	205	04911-00044	167	06701-50008	92
03320-00180	198	04710-04180	191	04911-00046	167	06701-65010	74
03320-00180	198	04710-04185	205	04911-00050	167	06701-65010	75
03320-00180	205	04710-04190	191	04911-00060	3	06701-65010	76
03320-00180	205	04710-04190	191	04911-00060	4	06701-65010	77
03320-00180	205	04710-04190	205	04911-00065	3	06701-65010	78
03320-00240	146	04710-04195	191	04911-00065	4	06701-65010	79
03320-00290	138	04710-04200	205	04911-00090	4	06701-65010	87
03320-00340	197	04710-04205	191	04913-10200	17	06701-65010	87
04134-20303	168	04710-04205	191	04913-10200	18	06711-45012	85
04134-20404	146	04710-04210	169	04913-11100	109	06711-50008	89
04134-20404	205	04710-04210	205	04913-11100	110	06711-50008	90
04138-00303	34	04710-04215	191	04913-11100	183	06711-50008	91
04150-20202	69	04710-04215	191	04913-11200	34	06711-50008	92
04150-20202	146	04710-04215	191	04913-11380	101	06711-65010	74
04150-20303	146	04710-04215	191	04914-00016	191	06711-65010	75
04601-44224	205	04710-04215	205	04914-00016	205	06711-65010	76
04601-44249	205	04710-04220	205	04914-00019	120	06711-65010	77
04601-44274	205	04710-04230	191	04914-00019	120A	06711-65010	78
04601-44303	205	04710-04230	205	04914-00019	198	06711-65010	79
04601-44323	205	04710-04235	191	06001-45012	85	06711-65010	87
04601-44347	205	04710-04235	205	06001-50008	91	06711-65010	87
04601-44355	205	04710-04245	191	06001-50008	92	06731-00070	85
04601-44391	205	04710-04245	205	06001-65010	77	06731-00120	87
04601-44434	205	04710-04260	191	06001-65010	78	06802-50008	93
04601-44477	205	04710-04260	191	06001-65010	79	06802-50008	93
04601-44510	205	04710-04260	205	06001-65010	87	06802-65010	80
04691-02075	168	04710-04270	191	06001-65010	87	06805-50008	94
04700-12008	167	04710-04280	205	06002-45012	85	06805-65010	81
04710-04004	120A	04710-04285	191	06005-50008	91	06805-65010	88
04710-04005	120	04710-04285	191	06005-50008	92	06805-65010	88
04710-04075	191	04710-04295	205	06005-65010	77	06806-45012	86
04710-04085	191	04710-04315	191	06005-65010	78	06806-50008	93
04710-04100	191	04710-04340	191	06005-65010	79	06806-50008	93
04710-04100	205	04710-12020	167	06005-65010	87	06806-50008	94
04710-04110	191	04901-00100	51	06005-65010	87	06806-65010	80
04710-04110	191	04901-00100	70	06006-50008	89	06806-65010	81
04710-04115	205	04901-00100	172	06006-50008	90	06806-65010	82
04710-04125	191	04901-00100	188	06006-50008	91	06806-65010	88
04710-04125	205	04901-00100	195	06006-50008	92	06806-65010	88
04710-04130	191	04901-00100	202	06006-65010	74	06807-50008	93
04710-04130	205	04901-00160	70	06006-65010	75	06807-65010	80
04710-04135	191	04901-00190	51	06006-65010	76	06807-65010	81
04710-04140	191	04901-00190	107	06006-65010	77	06841-45012	86
04710-04140	191	04901-00190	108	06006-65010	78	06841-50008	93
04710-04140	191	04901-00191	70	06006-65010	79	06841-65010	80
04710-04140	205	04911-00018	191	06006-65010	87	06841-65010	81
04710-04150	191	04911-00018	191	06006-65010	87	06841-65010	88
04710-04150	205	04911-00018	205	06007-45012	85	06841-65010	88
04710-04150	205	04911-00018	205	06007-50008	91	06843-45012	86
04710-04155	191	04911-00018	205	06007-50008	92	06843-50008	93
04710-04160	191	04911-00020	169	06007-65010	77	06843-65010	80

Part No.	Fig.No.	Part No.	Fig.No.	Part No.	Fig.No.	Part No.	Fig.No.
06843-65010	81	09001-08107	190	12N43-12111	51	12N53-80341	58
06843-65010	88	09001-08109	203	12N43-12151	51	12N53-82001	54
06843-65010	88	09001-08109	204	12N43-12201	51	12N53-82011	54
06851-45012	86	09001-08113	190	12N43-19801	51	12N53-82012	54
06851-50008	93	09001-08115	196	12N43-19801	53	12N53-82021	54
06853-65010	80	09001-08117	204	12N43-19811	52	12N53-82041	54
06853-65010	81	09001-08123	190	12N43-40251	53	12N53-82061	51
06853-65010	88	09001-08125	196	12N43-42001	52	12N53-82061	54
06853-65010	88	09001-08133	190	12N43-42031	52	12N53-82081	54
09001-08041	196	10A63-10201	51	12N43-42051	53	12N53-82091	56
09001-08047	196	10A73-50301	64	12N43-42061	53	12N53-82101	57
09001-08051	190	10A73-52071	64	12N43-42071	53	12N53-82111	57
09001-08051	196	10A73-52081	64	12N43-42111	53	12N53-82131	57
09001-08051	203	10A73-52091	64	12N43-42121	53	12N53-82151	56
09001-08055	190	10A73-52101	64	12N43-42131	53	12N53-82161	56
09001-08055	196	10A73-52121	64	12N43-42141	53	12N53-82171	56
09001-08057	196	10A73-52131	64	12N43-42151	53	12N53-82201	53
09001-08057	203	10A73-52141	64	12N43-42161	53	12N53-82201	56
09001-08059	204	10A73-52161	64	12N43-42171	53	12N53-82211	53
09001-08061	190	10A73-52201	64	12N43-42191	53	12N53-82211	56
09001-08061	196	10A73-52231	64	12N43-42251	53	12N53-82221	58
09001-08061	203	10A73-59801	64	12N43-42271	53	12N53-82222	58
09001-08065	190	10A73-59811	64	12N43-42281	53	12N53-82223	58
09001-08065	190	10A73-59821	64	12N43-42291	53	12N53-82231	58
09001-08065	204	10A77-12001	138	12N43-42301	53	12N53-82232	58
09001-08067	196	10A77-12041	138	12N43-42321	53	12N53-82251	58
09001-08067	196	10B62-50201	48	12N43-42351	53	12N53-82291	58
09001-08067	203	10B62-50202	48	12N43-42401	52	12N53-82321	58
09001-08069	204	10B63-42001	53	12N43-42411	52	12N53-82331	58
09001-08071	190	10B63-42011	53	12N43-42421	52	12N53-82351	58
09001-08071	196	10B73-22001	63	12N43-42431	52	12N53-82361	58
09001-08071	203	10B73-22011	63	12N43-42441	52	12N53-82371	58
09001-08075	190	10B73-50201	62	12N43-42471	52	12N53-82401	58
09001-08075	196	10L77-10201	138	12N43-42481	52	12N53-82421	58
09001-08075	196	110F3-52001	64	12N43-42501	52	12N53-82451	58
09001-08075	204	110F3-52011	64	12N43-42511	52	12N53-82481	58
09001-08077	190	110F3-52111	64	12N43-42521	52	12N53-82501	58
09001-08077	196	11243-82081	57	12N43-42551	53	12N53-82531	58
09001-08077	203	11243-82091	57	12N43-42561	53	12N53-82551	58
09001-08077	203	11243-82161	57	12N43-42571	53	12N53-82571	58
09001-08079	204	11243-82181	57	12N43-42581	53	12N53-82581	58
09001-08081	190	11243-82211	57	12N43-42601	52	12N53-82621	49
09001-08083	190	114A7-12001	138	12N52-50201	49	12N53-82621	54
09001-08083	196	115G3-82111	54	12N53-32001	61	12N53-82621	61
09001-08083	204	115G3-82241	54	12N53-32011	61	12N53-82641	55
09001-08085	190	115G3-82251	54	12N53-52031	64	12N53-82641	61
09001-08085	190	115G3-82351	57	12N53-52091	64	12N53-82701	58
09001-08085	203	115G3-82361	57	12N53-52101	64	12N53-82711	54
09001-08085	204	115G3-82671	58	12N53-52111	64	12N53-82721	58
09001-08089	196	116H3-82101	54	12N53-52121	64	12N53-82731	58
09001-08093	190	116H3-82101	56	12N53-52171	64	12N53-82732	58
09001-08093	196	116H3-82101	58	12N53-52181	64	12N53-82741	58
09001-08093	203	116H3-82201	58	12N53-52191	64	12N53-82751	58
09001-08093	204	116H3-82201	58	12N53-52231	64	12N53-82761	54
09001-08097	190	118H3-82231	58	12N53-52251	64	12N53-82771	58
09001-08097	196	12N43-10211	51	12N53-52271	64	12N53-82781	58
09001-08101	204	12N43-12001	51	12N53-80201	57	12N53-82791	58
09001-08103	190	12N43-12011	51	12N53-80301	54	12N53-89801	54
09001-08103	196	12N43-12021	51	12N53-80311	54	12N53-89801	56
09001-08103	203	12N43-12101	51	12N53-80321	55	12N53-89811	54

PARTS NUMBER INDEX

Part No.	Fig.No.	Part No.	Fig.No.	Part No.	Fig.No.	Part No.	Fig.No.
12N53-89831	58	20A70-40261	195	20A70-81631	204	20A76-50211	128
12003-12021	51	20A70-40271	195	20A70-81641	204	20A76-52201	128
12003-42052	52	20A70-40281	195	20A70-81651	204	20A76-52221	128
12003-42061	52	20A70-40291	195	20A70-81661	204	20A76-52301	129
12003-42251	53	20A70-40301	195	20A70-81671	204	20A76-52311	129
12003-42421	52	20A70-40311	195	20A70-81681	204	20A76-52321	129
12003-42451	52	20A70-40321	195	20A70-81691	204	20A76-52401	128
12003-42461	52	20A70-40331	195	20A70-81701	204	20A77-30321	139
12003-43021	70	20A70-40341	195	20A70-90101	200	20A77-30331	140
12163-82331	54	20A70-40351	195	20A72-30101	9	20A77-30341	141
12163-82421	54	20A70-40361	195	20A73-00301	59	20A77-30351	142
12163-82541	52	20A70-40371	195	20A73-00501	59	20A77-32001	141
12163-82541	54	20A70-40381	195	20A73-00511	59	20A77-32001	142
12163-82541	56	20A70-40401	195	20A73-70101	65	20A77-32011	141
12163-82561	55	20A70-40411	195	20A73-70201	65	20A77-32011	142
124T3-42651	62	20A70-40421	195	20A74-10302	68	20A77-40011	147
124T3-42661	62	20A70-40431	195	20A74-10312	68	20A77-40011	148
124T3-43041	10	20A70-40441	195	20A74-10322	68	20A77-40011	149
124T3-43041	141	20A70-40451	195	20A74-10332	68	20A77-40011	150
124T3-43041	142	20A70-40461	195	20A74-30103	70	20A77-40021	147
130C2-60302	41	20A70-40471	195	20A74-30122	70	20A77-40021	148
134A3-42071	53	20A70-40481	195	20A74-32151	70	20A77-40021	149
134B3-82401	57	20A70-40491	195	20A74-32261	70	20A77-40021	150
134G3-82111	57	20A70-40501	195	20A74-32501	70	20A77-40031	148
134G3-82121	57	20A70-40511	195	20A74-32511	70	20A77-40031	149
134G3-82131	57	20A70-40521	195	20A74-32551	70	20A77-40031	150
134G3-82141	57	20A70-40531	195	20A74-32561	70	20A77-40041	149
134G3-89811	57	20A70-40541	195	20A74-50201	96	20A77-40041	150
134G3-89831	57	20A70-40551	195	20A74-50221	96	20A77-40051	150
135C3-12081	51	20A70-40561	195	20A74-52001	96	20A77-42101	147
139B3-82121	58	20A70-40571	195	20A74-52101	96	20A77-42101	148
14603-52121	64	20A70-40581	195	20A74-52161	96	20A77-42101	149
15413-52081	64	20A70-50511	196	20A74-52201	96	20A77-42101	150
15573-42021	53	20A70-50521	196	20A74-59801	96	20A77-52301	119
15573-42151	52	20A70-60201	193	20A75-10161	98	20A77-52302	119
15573-42151	58	20A70-70101	202	20A75-12901	103	20A77-62051	146
15573-42151	59	20A70-70111	202	20A75-20201	106	20A77-62111	167
15583-82101	56	20A70-70121	202	20A75-22001	106	20A77-62122	167
15583-82411	58	20A70-70131	202	20A75-40202	108	20A77-62132	167
15583-82421	58	20A70-70141	202	20A75-42101	111	20A77-62201	167
15583-82441	58	20A70-70151	202	20A75-42101	112	20A77-62381	168
15583-82451	58	20A70-70161	202	20A75-42111	111	20A77-62391	168
15583-82461	58	20A70-70171	202	20A75-42111	112	20A77-62401	170
15583-82521	54	20A70-70181	202	20A75-42401	112	20A77-62451	170
15583-82521	56	20A70-70191	202	20A75-42501	112	20A77-62481	170
15583-82571	56	20A70-70201	202	20A76-40103	124	20A77-62501	146
15943-83261	54	20A70-70601	202	20A76-40252	132	20A78-10511	185
16402-54331	38	20A70-70611	202	20A76-40262	132	20A78-10511	185
16402-54331	42	20A70-70621	202	20A76-40311	126	20A78-10511	192
16402-54331	43	20A70-70631	202	20A76-42042	124	20A78-10511	199
16402-54331	44	20A70-70641	202	20A76-42711	133	20A78-10521	185
20A65-40202	107	20A70-70651	202	20A76-42722	133	20A78-10521	192
20A65-42201	111	20A70-70661	202	20A76-42801	126	20A78-10521	199
20A65-42301	111	20A70-70671	202	20A76-42852	133	20A78-10531	185
20A70-40201	195	20A70-70681	202	20A76-42861	130	20A78-10531	192
20A70-40211	195	20A70-70691	202	20A76-42861	131	20A78-10531	199
20A70-40221	195	20A70-70701	202	20A76-42901	129	20A78-20201	186
20A70-40231	195	20A70-81601	204	20A76-42911	129	20A78-30201	188
20A70-40241	195	20A70-81611	204	20A76-42952	124	20A78-30211	188
20A70-40251	195	20A70-81621	204	20A76-50201	128	20A78-30221	188

PARTS NUMBER INDEX

Part No.	Fig.No.	Part No.	Fig.No.	Part No.	Fig.No.	Part No.	Fig.No.
20A78-30231	188	2006-00212	152	210F0-53701	197	210F8-10592	185
20A78-30241	188	2006-00212	153	210F0-60201	198	210F8-10592	192
20A78-30251	188	20113-50181	64	210F0-60211	198	210F8-10592	199
20A78-30261	188	20114-30081	70	210F0-60221	198	210F8-10602	185
20A78-30271	188	20114-30091	70	210F0-60231	198	210F8-10602	192
20A78-30281	188	20319-20041	177	210F0-60241	198	210F8-10602	199
20A78-30291	188	20387-63741	69	210F0-60251	198	210F8-42631	197
20A78-30301	188	205A2-63311	41	210F0-60261	198	210H8-10532	185
20A78-30311	188	20801-02141	8	210F0-60271	198	210H8-10532	192
20A78-30321	188	20803-71081	65	210F0-60281	198	210H8-10532	199
20A78-30331	188	209K2-40501	16	210F0-60291	198	210H8-10542	185
20A78-30341	188	209K2-42002	21	210F0-60301	198	210H8-10542	192
20A78-30351	188	209K2-42021	21	210F0-60311	198	210H8-10542	199
20A78-30361	188	209K2-42041	21	210F0-60321	198	210H8-10552	185
20A78-30371	188	209K2-42351	17	210F0-60331	198	210H8-10552	192
20A78-30381	188	209K2-42351	18	210F0-60341	198	210H8-10552	199
20A78-40201	190	209K2-42351	28	210F0-60351	198	210H8-10612	185
20A78-40211	190	209K2-42351	28	210F0-60361	198	210H8-10612	192
20A78-40221	190	209K2-42351	28	210F0-60371	198	210H8-10612	199
20A78-40231	190	209K2-42351	30	210F0-60381	198	210H8-10622	185
20A78-40241	190	209K2-42351	42	210F0-93001	200	210H8-10622	192
20A78-40251	190	209K2-42351	43	210F0-93011	200	210H8-10622	199
20A78-40261	190	209K2-42351	44	210F0-93031	200	210H8-10632	185
20A78-40271	190	209K2-42351	46	210F0-93041	200	210H8-10632	192
20A78-40281	190	209K2-42351	47	210F0-93201	200	210H8-10632	199
20A78-40291	190	209K2-42351	180	210F0-93211	200	210H8-10642	185
20A78-40301	190	209K2-43001	50	210F0-93231	200	210H8-10642	192
20A78-40311	190	209K2-43001	130	210F0-93241	200	210H8-10642	199
20A78-40321	190	209K2-43001	131	210F0-93301	200	211F0-51501	197
20A78-40331	190	209K4-12551	67	210F0-93311	200	211F0-51511	197
20A78-40341	190	209K7-40301	151	210F0-93331	200	211F0-51521	197
20A78-40351	190	209K7-40301	152	210F0-93341	200	211F0-51531	197
20A78-40361	190	209K7-40301	153	210F2-42031	21	211F0-51541	197
20A78-40371	190	209P6-42831	133	210F6-12441	188	211F0-51551	197
20A78-40381	190	209P7-42151	156	210F6-12441	195	211F0-51561	197
20A78-40501	191	209P7-42691	156	210F6-12441	202	211F0-51571	197
20A78-40501	191	209P7-42801	155	210F8-10502	185	211F0-51581	197
20A78-50101	172	209P7-42811	155	210F8-10502	192	211F0-51591	197
20A78-50111	172	209P7-42821	155	210F8-10502	199	211F0-51601	197
20A78-52001	172	209P7-42821	155	210F8-10512	185	211F0-51611	197
20A79-12101	174	209P7-62531	171	210F8-10512	185	211F0-51621	197
20A79-12111	174	209W2-40301	156	210F8-10512	185	211F0-51631	197
20A79-12151	174	209W7-30201	143	210F8-10512	192	211F0-51641	197
20A79-12161	174	209W7-30301	144	210F8-10512	192	211F0-51651	197
20A79-12281	174	209W7-30401	145	210F8-10512	192	211F0-51661	197
20A98-20201	186	209W7-42001	156	210F8-10512	199	211F0-51671	197
20A99-12151	174	210B8-10502	185	210F8-10512	199	211F0-51681	197
20A99-12161	174	210B8-10502	185	210F8-10512	199	211F0-51701	197
20A99-12281	174	210B8-10502	192	210F8-10522	185	211F0-51711	197
20L71-00101	1	210B8-10502	192	210F8-10522	192	211F0-51721	197
20L71-02001	2	210B8-10502	199	210F8-10522	199	211F0-51731	197
20L71-02111	3	210B8-10502	199	210F8-10532	185	211F0-51741	197
20L72-12001	5	210B8-10512	185	210F8-10532	192	211F0-51751	197
20L72-12011	5	210B8-10512	192	210F8-10532	199	211F0-51761	197
20L72-12201	6	210B8-10512	199	210F8-10572	185	211F0-51771	197
20L72-30111	11	210B8-10522	185	210F8-10572	192	211F0-51781	197
20L72-40201	17	210B8-10522	192	210F8-10572	199	211F0-51791	197
20L72-40201	18	210B8-10522	199	210F8-10582	185	211F0-51801	197
20L77-62001	167	210F0-53691	197	210F8-10582	192	211F0-51811	197
2006-00212	151	210F0-53701	197	210F8-10582	199	211F0-51821	197

Part No.	Fig.No.	Part No.	Fig.No.	Part No.	Fig.No.	Part No.	Fig.No.
211F0-51831	197	211S9-12021	174	214A2-12111	7	214A7-42071	149
211F0-51841	197	21152-42013	17	214A2-12121	7	214A7-42071	150
211F0-51851	197	21152-42013	18	214A2-12141	7	214A7-42071	150
211F0-51861	197	21152-42021	17	214A2-12201	7	214A7-42071	150
211F0-51871	197	21152-42021	18	214A2-13001	7	214A7-42071	150
211F0-51881	197	21152-42091	17	214A2-13011	7	214A7-42071	150
211F0-62301	198	21152-42091	18	214A2-22081	8	214A7-42181	154
211F0-70302	202	21152-42091	47	214A2-42141	175	214A7-42181	154
211F0-70312	202	212R0-50501	196	214A2-42141	176	214A7-42181	154
211F0-70322	202	212R0-50511	196	214A2-42331	17	214A7-42181	154
211F0-70332	202	212R0-50521	196	214A2-42331	18	214A7-42191	154
211F0-70342	202	212R0-50531	196	214A2-42611	7	214A7-42201	154
211F0-70352	202	212R0-50541	196	214A2-42611	17	214A8-11001	185
211F0-70362	202	212R0-50551	196	214A2-42611	18	214A8-11001	192
211F0-70372	202	212R0-50561	196	214A2-42611	28	214A8-11001	199
211F0-70382	202	212R0-50571	196	214A2-42611	28	214A8-12001	185
211F0-70392	202	212R0-50581	196	214A2-42611	28	214A8-12001	192
211F0-70402	202	212R0-50591	196	214A2-42611	30	214A8-12001	199
211F0-93001	205	212R0-50601	196	214A2-42611	45	214A8-12011	185
211F8-22201	186	212R0-80501	196	214A2-42611	46	214A8-12011	192
211F8-22201	193	212R0-80501	203	214A2-42611	47	214A8-12011	199
211F8-22201	200	212R0-80511	196	214A2-42621	17	214A8-12021	185
211F8-22211	186	212R0-80511	203	214A2-42621	18	214A8-12021	192
211F8-22211	193	212R0-80521	196	214A2-42621	42	214A8-12021	199
211F8-22211	200	212R0-80521	203	214A2-42621	43	214A8-12031	185
211F8-22221	188	212R0-80531	196	214A2-42621	44	214A8-12031	192
211F8-22221	195	212R0-80531	203	214A2-42621	45	214A8-12031	199
211F8-22221	195	212R0-80541	196	214A2-42621	47	214A8-42661	197
211F8-22221	202	212R0-80541	203	214A2-42711	167	214A8-44151	191
211F8-22221	202	212R0-80551	196	214A2-44001	32	214A8-44151	198
211F8-22221	202	212R0-80551	203	214A2-44501	21	214A8-44151	205
211F8-22231	188	212R0-80561	203	214A2-52002	50	214A8-52051	96
211F8-22231	195	212R0-80571	203	214A2-52012	50	214A8-52221	96
211F8-22231	195	212R0-80581	203	214A4-12161	66	214A9-12142	174
211F8-22231	202	212R0-80591	203	214A5-22001	106	214A9-20101	177
211F8-22231	202	212R0-80601	203	214A5-32312	109	215E8-42171	197
211F8-22231	202	212R0-83001	196	214A5-32312	116	215E8-42171	197
211F8-22261	186	212R0-83001	203	214A5-33012	116	215E8-42181	197
211F8-22261	188	212R0-83011	196	214A5-33031	116	215E8-42181	197
211F8-22261	188	212R0-83011	203	214A5-33041	116	215E8-42231	197
211F8-22261	188	212R0-91202	205	214A5-33052	116	215E8-42231	197
211F8-22261	193	212R0-91301	198	214A5-33062	116	215E8-42231	204
211F8-22261	195	212R0-91301	205	214A5-53012	175	215E8-42241	190
211F8-22261	195	21232-32551	9	214A6-42252	33	215T0-83021	196
211F8-22261	200	21232-32551	11	214A6-42252	102	215T0-83021	203
211F8-22261	202	21237-52051	118	214A6-42252	183	216B8-10301	185
211F8-22261	202	21237-52051	118	214A6-42771	130	216B8-10301	192
211F8-22261	202	21237-52062	118	214A6-42771	131	216B8-10301	199
211F8-22271	186	21237-52062	118	214A6-42771	156	216B8-10311	185
211F8-22271	188	21279-12001	174	214A6-42911	180	216B8-10311	192
211F8-22271	188	21279-12011	174	214A7-42071	50	216B8-10311	199
211F8-22271	188	213T1-02011	2	214A7-42071	50	216B8-10321	185
211F8-22271	193	213T1-02021	2	214A7-42071	147	216B8-10321	192
211F8-22271	195	214A0-53681	197	214A7-42071	147	216B8-10321	199
211F8-22271	195	214A0-62151	198	214A7-42071	148	216G0-50201	197
211F8-22271	200	214A0-72701	202	214A7-42071	148	216G0-50211	197
211F8-22271	202	214A0-82831	196	214A7-42071	148	216G0-50221	197
211F8-22271	202	214A0-82831	203	214A7-42071	149	216G0-50231	197
211F8-22271	202	214A2-12001	7	214A7-42071	149	216G0-50241	197
211S9-12011	174	214A2-12021	7	214A7-42071	149	216G0-50251	197

Part No.	Fig.No.	Part No.	Fig.No.	Part No.	Fig.No.	Part No.	Fig.No.
216G0-50261	197	216G0-50911	197	216G2-43592	26	216G8-10351	192
216G0-50271	197	216G0-50921	197	216G2-43611	20	216G8-10351	199
216G0-50281	197	216G0-50931	197	216G2-43611	23	216G8-10361	185
216G0-50291	197	216G0-50941	197	216G2-43611	24	216G8-10361	192
216G0-50301	197	216G0-50951	197	216G2-43611	25	216G8-10361	199
216G0-50311	197	216G0-50961	197	216G2-43611	26	216G8-10371	185
216G0-50321	197	216G0-50971	197	216G2-43651	17	216G8-10371	192
216G0-50331	197	216G0-50981	197	216G2-43651	18	216G8-10371	199
216G0-50341	197	216G0-53011	197	216G2-43711	17	216G8-10381	185
216G0-50351	197	216G0-53051	197	216G2-43711	18	216G8-10381	192
216G0-50361	197	216G0-53061	197	216G3-02051	60	216G8-10381	199
216G0-50371	197	216G0-59801	197	216G3-02061	60	216G8-10391	185
216G0-50381	197	216G0-59801	198	216G4-12101	66	216G8-10391	192
216G0-50401	197	216G0-93101	205	216G4-12111	66	216G8-10391	199
216G0-50411	197	216G0-93201	191	216G4-12681	67	216G8-10401	185
216G0-50421	197	216G0-93201	198	216G4-12711	67	216G8-10401	192
216G0-50431	197	216G0-93201	205	216G5-32201	114	216G8-10401	199
216G0-50441	197	216G0-93212	191	216G5-32331	114	216G8-10411	185
216G0-50451	197	216G1-02051	2	216G5-32341	114	216G8-10411	192
216G0-50461	197	216G1-02311	2	216G5-42011	109	216G8-10411	199
216G0-50471	197	216G2-22051	8	216G6-42451	125	216G8-10421	185
216G0-50481	197	216G2-40602	20	216G6-42481	125	216G8-10421	192
216G0-50491	197	216G2-40602	23	216G6-42921	127	216G8-10421	199
216G0-50501	197	216G2-40602	24	216G6-42931	127	216G8-10431	185
216G0-50511	197	216G2-40602	25	216G6-43231	73	216G8-10431	192
216G0-50521	197	216G2-40602	26	216G6-43271	121	216G8-10431	199
216G0-50531	197	216G2-40701	20	216G6-43561	124	216G8-10441	185
216G0-50541	197	216G2-40711	20	216G6-52161	128	216G8-10441	192
216G0-50551	197	216G2-40721	20	216G6-52291	125	216G8-10441	199
216G0-50561	197	216G2-40731	20	216G6-52291	128	216G8-12101	185
216G0-50571	197	216G2-42311	17	216G6-52291	132	216G8-12101	192
216G0-50581	197	216G2-42311	18	216G7-32021	139	216G8-12101	199
216G0-50601	197	216G2-42321	17	216G7-32021	140	216G8-12921	185
216G0-50611	197	216G2-42321	18	216G7-32021	141	216G8-12921	192
216G0-50621	197	216G2-43111	19	216G7-32021	142	216G8-12921	199
216G0-50631	197	216G2-43401	17	216G7-32021	143	216G8-22201	187
216G0-50641	197	216G2-43401	18	216G7-32021	144	216G8-22201	194
216G0-50651	197	216G2-43411	17	216G7-32021	145	216G8-22201	201
216G0-50661	197	216G2-43411	18	216G7-52201	120	216G8-22301	187
216G0-50671	197	216G2-43421	17	216G7-52201	120A	216G8-22301	194
216G0-50681	197	216G2-43421	18	216G8-02001	188	216G8-22301	201
216G0-50701	197	216G2-43531	20	216G8-02001	195	216G8-22311	187
216G0-50711	197	216G2-43531	23	216G8-02001	202	216G8-22311	194
216G0-50721	197	216G2-43531	24	216G8-02502	198	216G8-22311	201
216G0-50731	197	216G2-43531	25	216G8-10301	185	216G8-22321	187
216G0-50741	197	216G2-43531	26	216G8-10301	192	216G8-22321	194
216G0-50751	197	216G2-43542	20	216G8-10301	199	216G8-22321	201
216G0-50761	197	216G2-43542	23	216G8-10311	185	216G8-22331	187
216G0-50771	197	216G2-43542	24	216G8-10311	192	216G8-22331	194
216G0-50781	197	216G2-43542	25	216G8-10311	199	216G8-22331	201
216G0-50801	197	216G2-43542	26	216G8-10321	185	216G8-22341	187
216G0-50811	197	216G2-43571	20	216G8-10321	192	216G8-22341	194
216G0-50821	197	216G2-43571	23	216G8-10321	199	216G8-22341	201
216G0-50831	197	216G2-43571	24	216G8-10331	185	216G8-33351	202
216G0-50841	197	216G2-43571	25	216G8-10331	192	216G8-33361	188
216G0-50851	197	216G2-43571	26	216G8-10331	199	216G8-33361	195
216G0-50861	197	216G2-43592	20	216G8-10341	185	216G8-33361	202
216G0-50871	197	216G2-43592	23	216G8-10341	192	216G8-33361	202
216G0-50881	197	216G2-43592	24	216G8-10341	199	216G8-33371	188
216G0-50901	197	216G2-43592	25	216G8-10351	185	216G8-33371	195

Part No.	Fig.No.	Part No.	Fig.No.	Part No.	Fig.No.	Part No.	Fig.No.
216G8-33371	202	216K8-10401	199	218G8-45971	190	22N43-90321	50
216G8-33371	202	216K8-10411	199	218G8-46011	204	22N43-90411	50
216G8-33401	188	216K8-10421	199	218G8-46031	190	22N43-90511	50
216G8-33401	195	216K8-10431	199	218G8-46031	196	22N43-90561	50
216G8-33401	202	216K8-10441	199	218G8-46031	196	22N43-92201	50
216G8-41001	191	216M7-62101	138	218G8-46031	203	22N43-92302	50
216G8-41001	198	217G2-32001	9	218G8-46051	190	22N43-92731	50
216G8-41001	205	217G2-32001	10	218G8-46091	196	22N43-92901	50
216G8-42031	190	217G2-42021	19	218G8-46091	203	22N43-92911	50
216G8-42031	196	217G2-42301	17	218G8-46091	204	22N43-93001	50
216G8-42031	203	217G2-42301	18	218G8-46131	190	22N43-93011	50
216G8-43151	190	217M1-02001	3	218G8-46151	196	22N43-93021	50
216G8-43151	204	217M1-02001	4	218G8-46171	196	22N43-93031	50
216G8-43161	197	217M2-12221	5	218G8-46171	196	22N43-93151	50
216G8-43161	197	217U9-12002	174	218G8-46171	203	22N43-93201	50
216G8-43161	204	217Y9-12001	174	218G8-46191	204	22N45-30304	107
216G8-43501	191	217Y9-12011	174	218G8-46211	190	22N45-32101	111
216G8-51001	173	218G8-30401	188	218G8-46211	190	22N45-32131	111
216G8-51011	173	218G8-30411	188	218G8-46211	203	22N45-32151	109
216G8-51011	173	218G8-30421	188	218G8-46251	204	22N45-32161	109
216G8-51011	173	218G8-30431	188	218G8-46271	190	22N45-32201	109
216G8-51011	173	218G8-30441	188	218G8-46291	196	22N45-40303	107
216G8-52201	172	218G8-30451	188	218G8-46331	190	22N45-42101	107
216G8-52251	173	218G8-30461	188	218G8-46331	203	22N51-00141	1
216G8-52261	173	218G8-30471	188	218G8-46331	204	22N51-00161	1
216G8-52261	173	218G8-30481	188	218G8-46351	190	22N51-00201	1
216G8-52301	172	218G8-30491	188	218G8-46351	190	22N51-00211	1
216G8-52301	188	218G8-30501	188	218G8-46351	204	22N52-22101	121
216G8-52301	195	218G8-30511	188	218G8-46371	196	22N52-22201	119
216G8-52301	202	218G8-30521	188	218G8-46451	196	22N52-22201	121
216G8-52501	172	218G8-30531	188	218G8-46451	203	22N52-40301	12
216G8-53001	173	218G8-30541	188	218G8-46471	190	22N52-42102	17
216G8-53011	173	218G8-30551	188	218G8-46471	204	22N52-42102	18
216G8-53021	173	218G8-30561	188	218G8-46531	196	22N52-42151	45
216G8-53021	173	218G8-30571	188	218G8-46551	190	22N52-42201	14
216G8-53031	97	218G8-30581	188	218G8-46591	203	22N52-42251	21
216G8-53031	173	218G8-42501	190	218G8-46611	196	22N52-42301	19
216G8-53031	173	218G8-42501	196	218G8-46611	204	22N52-42311	17
216G8-53041	173	218G8-42501	203	218G8-46631	190	22N52-42311	18
216G8-53051	173	218G8-42501	204	218G8-46691	203	22N52-42321	17
216G9-12052	175	218G8-42511	190	218G8-46711	190	22N52-42321	18
216G9-12062	175	218G8-42511	204	218G8-46751	204	22N52-42331	17
216G9-12071	175	218G8-42521	196	218G8-46791	190	22N52-42331	18
216G9-12071	176	218G8-42521	203	218G8-46791	196	22N52-42501	12
216G9-12131	175	218G8-42701	190	218G8-46851	204	22N52-42511	12
216G9-12131	176	218G8-42701	196	218G8-46951	196	22N52-43001	17
216G9-12142	174	218G8-42701	203	218G8-46971	190	22N52-43001	18
216H3-92171	125	218G8-42701	204	218G8-47131	190	22N53-02151	59
216H5-42141	125	218G8-45631	196	218G9-12072	175	22N53-02212	65
216H7-82111	171	218G8-45711	196	219M2-10102	5	22N54-10201	66
216K8-10301	199	218G8-45791	196	219M2-12301	5	22N54-10201	67
216K8-10311	199	218G8-45791	203	219N2-10102	5	22N54-10342	68
216K8-10321	199	218G8-45811	190	219W9-12072	176	22N54-10352	68
216K8-10331	199	218G8-45851	196	22B54-52301	97	22N54-10361	68
216K8-10341	199	218G8-45871	196	22N41-00201	1	22N54-10371	68
216K8-10351	199	218G8-45871	203	22N42-42201	13	22N54-10381	68
216K8-10361	199	218G8-45891	190	22N43-90202	50	22N54-12011	66
216K8-10371	199	218G8-45931	204	22N43-90212	50	22N54-12022	66
216K8-10381	199	218G8-45951	196	22N43-90301	50	22N54-12201	130
216K8-10391	199	218G8-45951	203	22N43-90311	50	22N54-12201	131

Part No.	Fig.No.	Part No.	Fig.No.	Part No.	Fig.No.	Part No.	Fig.No.
22N54-12311	130	22N56-42731	131	22N57-42161	152	22194-32222	70
22N54-12311	131	22N56-42741	130	22N57-42161	153	22194-32361	70
22N54-12321	130	22N56-42741	131	22N57-42201	139	22198-42611	96
22N54-12321	131	22N56-42751	130	22N57-42201	140	22199-12401	51
22N54-12411	67	22N56-42751	131	22N57-42201	141	22199-12401	70
22N54-13001	67	22N56-42761	130	22N57-42201	142	22199-12401	96
22N54-13021	67	22N56-42761	131	22N57-42201	143	22199-12401	107
22N54-13031	67	22N56-42771	131	22N57-42201	144	22199-12401	108
22N54-32131	70	22N56-42791	130	22N57-42201	145	22199-12401	172
22N54-32181	70	22N56-42791	131	22N57-42211	139	22199-12401	172
22N54-32211	70	22N56-42811	133	22N57-42211	140	22199-22001	177
22N54-32222	70	22N56-42811	133	22N57-42211	141	22199-22251	177
22N54-32241	70	22N56-43041	125	22N57-42211	142	22199-22261	177
22N54-32451	70	22N56-43051	125	22N57-42211	143	222A2-10211	5
22N54-32481	70	22N56-43221	125	22N57-42211	144	222A2-22061	121
22N54-33051	70	22N56-43252	132	22N57-42211	145	222A2-42031	130
22N54-52251	96	22N56-43271	125	22N57-52102	120	222A2-42031	131
22N55-12271	100	22N56-43281	125	22N57-52102	120A	222A6-42381	33
22N55-12281	100	22N56-43481	132	22N57-52302	119	222A6-42381	183
22N55-12571	101	22N56-43481	132	22N57-52303	119	222A9-32011	103
22N55-12701	102	22N56-43531	125	22N57-53001	119	22216-30051	122
22N55-12711	102	22N56-43541	125	22N57-53101	120A	22216-30051	123
22N55-12721	102	22N56-52231	128	22N57-62221	170	22252-32241	9
22N55-13181	98	22N57-32041	139	22N57-63151	170	22252-32241	11
22N55-13181	99	22N57-32041	140	22N57-80201	171	22252-32251	7
22N55-13181	101	22N57-32041	141	22N57-80301	171	22252-32251	9
22N55-13181	104	22N57-32041	142	22N58-43011	204	22252-32251	11
22N55-13181	104	22N57-32041	143	22N58-43021	204	22256-42001	22
22N55-13181	105	22N57-32041	144	22N58-45001	191	22256-42001	125
22N55-13181	105	22N57-32041	145	22N58-45001	205	224G2-32011	11
22N55-13181	105	22N57-40011	147	22N59-12041	174	224G5-42061	109
22N55-13181	105	22N57-40011	148	22N59-12051	174	224G5-42061	110
22N55-13181	124	22N57-40011	149	22N59-12061	174	225A7-62021	138
22N55-13191	101	22N57-40011	150	22N59-12261	175	225R6-32001	123
22N55-13191	104	22N57-40021	147	22N59-12351	175	225R6-42031	50
22N55-13191	105	22N57-40021	148	22S57-82001	171	225R6-42031	129
22N55-20211	106	22N57-40021	149	22U42-42211	17	225R6-42031	130
22N55-22031	106	22N57-40021	150	22U51-00201	1	225R6-42031	131
22N55-22121	106	22N57-40031	148	22U51-00212	1	225R9-12001	176
22N55-22131	106	22N57-40031	149	22U52-42151	19	225R9-12052	176
22N55-40303	108	22N57-40031	150	22U52-42211	18	225R9-12071	176
22N55-40403	108	22N57-40041	149	22U55-22102	106	225R9-12081	176
22N55-42101	108	22N57-40041	150	22018-30121	186	225R9-12091	176
22N55-42191	108	22N57-40051	150	22018-30121	193	225R9-12112	176
22N55-42191	169	22N57-42001	147	22018-30121	200	22513-02051	60
22N55-42191	183	22N57-42001	148	22018-30261	186	22517-40051	147
22N55-42601	108	22N57-42001	149	22018-30261	193	22517-40051	148
22N55-50101	117	22N57-42001	150	22018-30261	200	22517-40051	149
22N55-50201	117	22N57-42121	147	22018-30304	186	22517-40051	150
22N56-32301	123	22N57-42121	148	22018-30304	193	22517-40051	190
22N56-40203	125	22N57-42121	149	22018-30304	200	22517-40051	204
22N56-40272	132	22N57-42121	150	221A2-42031	33	22574-32062	70
22N56-40361	125	22N57-42151	147	221A2-42031	181	22574-32102	70
22N56-40411	132	22N57-42151	148	22118-40181	190	22574-40202	77
22N56-40421	132	22N57-42151	149	22118-40181	190	22574-40303	74
22N56-42602	127	22N57-42151	150	22118-40181	196	22574-40303	77
22N56-42612	127	22N57-42161	147	22118-40181	203	22574-40303	80
22N56-42701	130	22N57-42161	148	22118-40181	204	22574-40303	83
22N56-42701	131	22N57-42161	149	22192-22091	8	22578-32841	186
22N56-42731	130	22N57-42161	151	22193-03001	59	22578-32841	193

Part No.	Fig.No.	Part No.	Fig.No.	Part No.	Fig.No.	Part No.	Fig.No.
22578-32841	200	234A8-42561	73	23658-52401	172	23678-40260	191
22580-53321	197	234A8-42561	197	23658-52401	172	23678-40260	205
22678-52021	197	234A8-42561	197	23659-12101	176	23678-40270	191
22679-12102	184	234A8-42561	204	23659-42161	187	23678-40280	205
22679-43831	197	234A8-42571	190	23659-42161	194	23678-40285	191
22717-40061	106	234A8-42571	197	23659-42161	201	23678-40285	191
22717-40061	147	234A8-42571	197	23678-06002	188	23678-40295	205
22717-40061	148	234A8-42571	204	23678-06002	195	23678-40315	191
22717-40061	149	234A8-42611	191	23678-06002	202	23678-40340	191
22717-40061	150	234A8-42611	198	23678-40075	191	23678-42421	183
22717-40081	190	234A8-42611	205	23678-40085	191	23679-45051	191
22717-40081	204	234A8-42622	191	23678-40100	191	23679-45051	205
228F1-02211	2	234A8-43501	204	23678-40100	205	23772-12071	5
229F0-94101	205	234H7-60351	69	23678-40110	191	23775-42101	110
229F2-22071	121	23445-40431	111	23678-40110	191	238A2-42151	19
229F2-22151	119	23445-40431	112	23678-40115	205	23870-52871	146
229F2-22151	121	23451-02011	11	23678-40125	191	239A2-12021	7
229F2-22171	121	23453-02071	60	23678-40125	205	239A2-12141	5
229F2-42161	45	23453-02091	60	23678-40130	191	239A2-40501	15
229F6-42211	188	23453-02131	60	23678-40130	205	239A2-42101	19
229F6-42211	195	23453-79801	65	23678-40135	191	239A2-42221	20
229F6-42211	202	23457-42041	148	23678-40140	191	239A2-42221	20
230C2-42201	18	23457-42041	149	23678-40140	191	239A4-12402	66
230C2-42201	36	23458-52031	71	23678-40140	191	239A4-12411	66
230C2-42201	46	235C2-42131	20	23678-40140	205	239A4-12431	66
230C2-42201	47	235C2-42131	23	23678-40150	191	239A4-12441	66
23019-20011	177	235C2-42131	24	23678-40150	205	239A4-12541	130
23072-42001	19	235C2-42131	25	23678-40150	205	239A5-12501	179
231A8-12001	185	235C2-42131	26	23678-40155	191	239A5-12521	179
231A8-12001	192	235C2-42141	20	23678-40160	191	239A5-40501	109
231A8-12001	199	235C2-42141	23	23678-40160	191	239A5-40501	114
231A8-12011	185	235C2-42141	24	23678-40165	191	239A5-42301	113
231A8-12011	192	235C2-42141	25	23678-40165	191	239A5-42471	111
231A8-12011	199	235C2-42141	26	23678-40165	205	239A9-12051	175
231A8-12021	185	23647-40041	147	23678-40165	205	239A9-12301	175
231A8-12021	192	23648-50161	197	23678-40170	205	239A9-92001	103
231A8-12021	199	23650-83531	96	23678-40175	191	239A9-92001	103
231A8-12031	185	23652-12051	7	23678-40175	205	239B2-12141	5
231A8-12031	192	23652-12051	9	23678-40180	191	239B2-42301	33
231A8-12031	199	23652-12051	52	23678-40185	205	239B2-42301	183
232W9-12001	176	23652-43081	183	23678-40190	191	23917-42191	197
232W9-12011	176	23652-44001	17	23678-40190	191	242F6-80101	134
232W9-12021	176	23652-44001	18	23678-40190	205	242F6-80201	135
232W9-12051	176	23652-44001	39	23678-40195	191	242F6-82041	134
232W9-12101	176	23653-02001	60	23678-40200	205	242F6-82041	135
232W9-12111	176	23654-32041	70	23678-40205	191	242F6-82041	136
23200-50811	197	23654-34051	72	23678-40205	191	242F6-82041	137
23200-50841	197	23654-34051	72	23678-40210	205	242F6-82051	134
23232-42072	17	23655-22101	125	23678-40215	191	242F6-82051	135
23232-42072	18	23655-42421	107	23678-40215	191	242F6-82051	136
23235-40091	113	23655-42421	107	23678-40215	191	242F6-82051	137
234A0-50601	197	23655-42421	108	23678-40215	205	242F6-82081	134
234A0-50801	197	23655-42421	108	23678-40220	205	242F6-82081	136
234A0-52611	197	23656-42601	58	23678-40230	191	242F6-82081	137
234A0-62101	198	23657-12002	138	23678-40230	205	242F6-82091	134
234A2-12201	5	23657-42131	148	23678-40235	191	242F6-82091	136
234A2-12211	5	23658-52051	197	23678-40235	205	242F6-82091	137
234A2-42301	32	23658-52061	197	23678-40245	191	242F6-82101	134
234A8-02201	205	23658-52101	172	23678-40245	205	242F6-82101	135
234A8-41101	191	23658-52101	172	23678-40260	191	242F6-82101	136

Part No.	Fig.No.	Part No.	Fig.No.	Part No.	Fig.No.	Part No.	Fig.No.
242F6-82101	137	247C2-43301	46	273A9-12242	174	50A70-82501	10
242F6-82111	134	247C2-43301	47	27397-52101	54	50A70-82511	10
242F6-82111	135	247C2-43501	45	27399-12051	174	50A70-90101	98
242F6-82111	136	247C2-43501	47	27399-12091	174	50A70-90201	132
242F6-82111	137	247C2-43601	46	27419-12061	176	50A70-90401	98
242F6-82121	134	247C2-43601	47	27419-12062	175	50A70-92251	4
242F6-82121	135	24843-02011	60	27419-12071	176	50A71-00101	183
242F6-82121	136	24843-02062	60	27419-12072	175	50A71-00121	183
242F6-82121	137	24868-42111	197	27662-62711	125	50A71-31001	32
242F6-82141	134	24868-42111	197	27682-62131	45	50A71-42202	133
242F6-82141	136	24868-42111	204	27682-62131	46	50A71-42212	133
242F6-82141	137	250A2-22001	8	27682-62131	47	50A71-43022	133
242F6-82271	134	25369-47031	33	277H0-62101	198	50A71-43032	133
242F6-82271	136	25592-42081	19	277H0-62111	198	50A71-61001	186
242F6-82271	137	25592-42121	121	277H0-63001	198	50A71-61011	186
242F6-82281	134	25595-42411	115	277H6-52081	126	50A71-61101	186
242F6-82281	136	25595-42421	115	277H7-60601	146	50A71-61111	186
242F6-82281	137	25595-42452	114	277T0-92131	205	50A71-61301	193
242F6-82361	135	25595-42452	115	27732-42221	101	50A71-61401	193
242F6-82371	135	25595-42452	116	27732-42311	31	50A71-61501	200
24234-32221	70	25595-42482	115	27732-42311	33	50A71-61601	200
24234-32231	70	25595-42491	109	27732-42311	35	50A71-70201	9
24234-32241	70	25595-42491	110	27732-42311	183	50A71-70301	9
24234-32501	71	25595-42502	115	27792-63381	32	50A72-B0303	124
24234-39803	70	25599-22051	177	278M2-42061	117	50A72-B0421	167
24234-40201	91	25599-22061	177	278M2-42061	117	50A72-B0431	167
24235-42091	113	25599-32001	125	278M6-42031	129	50A72-B2012	124
24236-12572	71	25599-32021	125	278M6-42031	156	50A72-B2401	170
24236-12581	71	256A1-08031	2	278R0-63151	190	50A72-B2451	170
24237-60411	146	256C1-08011	2	27912-62441	117	50A72-C3872	133
24239-22001	177	256C1-12111	106	27979-43101	191	50A72-90201	99
24274-40201	78	256C2-42271	181	27979-43101	198	50A72-90211	99
24274-40501	75	256C5-12631	33	27979-43101	205	50A72-90221	99
24274-40501	78	256C6-32011	1	280B8-42001	190	50A72-90231	99
24274-40501	81	256C9-52372	1	280B8-42031	190	50A73-70103	70
24274-40501	84	256T2-42121	130	280C2-42301	16	50A73-70122	70
243C6-40021	125	256T2-42121	131	280C2-42311	16	50A73-70203	70
243C6-42811	132	25784-52342	96	280C2-42331	15	50A73-72201	70
243C6-42821	132	25785-43091	109	280C2-42331	16	50A73-72211	70
243C6-42831	132	25790-94021	205	280C2-42341	16	50A74-60321	139
24320-56871	96	26094-17021	68	280C2-42351	15	50A74-60331	140
24329-45541	54	26519-12281	175	280C2-42351	16	50A74-60341	141
24329-45541	56	26602-42041	70	281E4-32101	70	50A74-60351	142
24329-45541	58	26602-42221	168	281E6-42521	50	50A74-62011	168
24329-46201	191	27042-42312	41	281E6-42521	130	50A75-00101	98
24329-46201	191	27042-42322	171	281E6-42521	131	50A75-00111	98
24329-46201	205	27042-64311	41	281E6-42571	130	50A75-00121	98
24329-46201	205	27042-64561	181	281E6-42571	131	50A75-00131	98
24329-46201	205	27045-40302	109	281E6-42571	179	50A75-00141	98
24352-42521	17	27045-40302	110	281E7-42101	154	50A75-00501	103
24352-42521	18	27045-40302	115	281E7-62041	170	50A75-40051	179
24453-02061	60	271A5-42301	110	281E8-52201	172	50A75-40081	133
24459-42951	191	271A6-42601	156	281E8-52201	172	50A75-40101	179
24459-42951	198	271A7-52301	119	281E8-52211	172	50A75-40201	182
24459-42951	205	271A9-12191	184	283A7-62501	69	50A75-40211	126
246B2-43221	46	271A9-12251	175	283A7-62501	69	50A75-40251	182
246B2-43221	47	272K8-52201	188	3956323	37	50A75-40412	133
24602-42151	183	272K8-52201	195	50A62-C3772	133	50A75-42081	179
24662-22032	8	272K8-52201	202	50A70-80201	10	50A75-42531	182
24662-22141	8	273A6-12421	183	50A70-80301	10	50A75-42541	182

PARTS NUMBER INDEX

Part No.	Fig.No.	Part No.	Fig.No.	Part No.	Fig.No.	Part No.	Fig.No.
50A75-42581	182	510F3-82611	77	514A2-72411	154	516G2-74301	201
50A75-42591	182	510F3-82611	80	514A2-72411	154	516G2-82051	176
50A75-42601	132	510F3-82611	83	514A2-82012	176	516G2-82061	176
50A75-42611	132	510F5-54051	190	514A3-04201	204	516G3-74001	190
50A75-42721	182	510F5-54051	196	514A3-04221	204	516G3-74001	196
50A76-70321	139	510F5-54051	203	514A3-72052	70	516G3-74001	203
50A76-70331	140	510F5-54051	204	514A3-72062	70	516G3-82011	176
50A76-70341	141	510F5-54061	190	514A3-72091	21	516G3-82111	176
50A76-70351	142	510F5-54061	196	514A3-82002	176	516G3-82121	176
50A77-20211	33	510F5-54061	203	514A3-82012	176	516G3-82171	176
50A77-20221	33	510F5-54061	204	514A3-82022	176	516G3-82211	176
50A77-31001	186	511F3-74021	186	514A3-82072	176	516G3-82221	176
50A77-42001	73	511F3-74021	188	514A3-82301	200	516G3-82271	176
50A77-42011	73	511F3-74021	193	514A3-82321	200	516G3-82801	176
50A77-42021	73	511F3-74021	195	514A3-82331	174	516G3-82821	176
50A77-42031	73	511F3-74021	195	514A3-82331	200	516G3-82831	176
50A78-10201	128	511F3-74021	200	514A3-82341	174	516G3-82881	176
50A78-10311	129	511F3-74021	202	514A3-82341	200	516G5-13051	98
50A78-82201	133	511F3-74021	202	514A3-82351	200	516G5-13051	99
50A78-92001	102	511F3-74021	202	514A3-82361	200	516G5-13151	104
50A78-92001	102	511F3-74031	186	514A3-82371	200	516G5-13151	105
50A78-92201	29	511F3-74031	188	514A3-82381	200	516G6-80171	83
50A78-92201	29	511F3-74031	193	514A3-82391	174	516G6-80271	95
50A78-92201	43	511F3-74031	195	514A3-82391	200	516G6-85001	95
50A78-92201	43	511F3-74031	195	514A3-82611	89	516G6-85011	83
50A78-92201	44	511F3-74031	200	514A3-82611	91	516G6-85011	84
50B77-50101	38	511F3-74031	202	514A3-82611	93	516G6-92001	40
50B77-52051	41	511F3-74031	202	514A3-82611	95	516G6-92011	40
50B77-52061	41	511F3-74031	202	514A5-12011	104	516G6-92022	40
50B77-52101	41	51232-82141	174	514A5-12011	105	516G6-92031	40
50B77-52111	41	51232-82151	174	514A5-12021	42	516G6-92151	40
50B77-52151	41	51233-80401	80	514A5-12021	44	516G9-10101	31
50B77-52161	41	51233-80451	93	514A5-12021	100	516G9-12011	31
50B77-52301	42	51236-80201	80	514A5-12021	101	516K6-80171	84
50B77-52301	43	51236-80211	80	514A5-13471	103	516M5-12301	103
50B77-52301	44	51236-80221	80	514A5-32341	35	516M5-12311	103
50H70-80211	10	51236-80301	86	516G0-60011	2	518G2-82182	176
50H70-80221	10	51236-80311	86	516G0-62001	2	518G2-82282	176
50J71-70101	9	51236-80321	86	516G1-42111	28	518G6-80201	80
50L70-90301	4	51236-80401	88	516G1-42111	28	518G6-80301	93
509K2-30101	16	51236-80411	88	516G1-42111	28	518G7-40701	85
509K2-82251	176	51236-80421	88	516G1-42111	35	518H3-82002	176
509K3-82681	176	51236-80431	88	516G1-42211	30	518H3-82012	176
509K3-82811	176	51236-80441	88	516G1-42211	35	518H3-82072	176
509K3-82821	176	51236-80451	88	516G1-64301	187	518J6-80201	81
509K3-82871	176	51236-80501	93	516G1-64301	194	519M6-60302	5
509K3-83011	176	51236-80511	93	516G1-64301	201	519N6-60302	5
509K3-83021	176	51236-80521	93	516G1-64351	187	52N43-72101	13
509K3-83071	176	51272-82141	174	516G1-64351	194	52N51-02021	183
509K3-83451	176	51272-82151	174	516G1-64351	201	52N51-02101	183
509K3-83461	176	51276-80201	81	516G2-72701	176	52N51-03001	183
509P6-92201	183	51276-80211	81	516G2-72711	176	52N51-30201	32
509P9-90101	22	51276-80221	81	516G2-74101	187	52N51-32001	32
509P9-90101	22	514A1-41001	29	516G2-74101	194	52N51-32011	32
510F2-42211	96	514A1-41001	43	516G2-74101	201	52N51-32101	32
510F3-04021	190	514A1-41001	44	516G2-74201	187	52N51-42101	27
510F3-74002	186	514A1-41011	29	516G2-74201	194	52N51-42101	28
510F3-74002	193	514A1-41021	29	516G2-74201	201	52N51-42111	27
510F3-74002	200	514A1-41031	29	516G2-74301	187	52N51-42111	27
510F3-82611	74	514A2-72411	154	516G2-74301	194	52N51-42111	28

PARTS NUMBER INDEX

Part No.	Fig.No.	Part No.	Fig.No.	Part No.	Fig.No.	Part No.	Fig.No.
52N51-42111	28	52N55-32291	179	52N57-72001	130	522B0-92031	4
52N51-42121	27	52N55-40301	181	52N57-72001	131	522B0-92041	4
52N51-42121	28	52N55-40311	181	52N58-10221	132	522B0-92051	4
52N51-42151	24	52N55-40401	179	52N58-10301	128	524T3-84031	200
52N51-42151	25	52N55-42071	179	52N58-10301	132	524W1-02171	183
52N51-42151	26	52N55-42101	179	52N58-12501	128	524W1-02191	183
52N51-42161	23	52N55-42111	179	52N58-12501	132	524W1-02201	183
52N51-42161	25	52N55-42121	179	52N58-12511	128	524W3-83091	132
52N51-42301	23	52N55-42161	179	52N58-12511	132	524W5-42051	179
52N51-42301	23	52N55-42161	179	52N58-22001	35	52516-80302	89
52N51-42301	24	52N55-42171	180	52N58-22101	35	52516-80302	91
52N51-42301	25	52N55-42181	180	52N58-82001	39	52516-80302	93
52N51-42301	25	52N55-42191	180	52N58-82101	39	52516-80302	95
52N51-42401	27	52N55-42201	180	52N58-92001	30	52576-80502	77
52N51-42401	27	52N55-42211	180	52N58-92021	30	52576-80702	77
52N51-42401	28	52N55-42221	180	52N58-92021	43	52576-80902	74
52N51-42401	28	52N55-42301	20	52N58-92021	44	52576-80902	77
52N51-42401	28	52N55-42351	180	52N58-92041	30	52577-52001	86
52N51-42411	27	52N55-42421	181	52N58-92041	35	52672-82073	176
52N51-42411	27	52N55-42451	181	52N58-92112	28	529F1-42201	29
52N51-42411	28	52N55-42501	182	52N58-92112	28	529F1-42251	29
52N51-42411	28	52N55-42511	182	52N58-92112	28	529F1-42251	43
52N51-42511	27	52N55-42521	182	52N58-92112	30	529F1-42251	44
52N51-42511	28	52N55-42551	182	52N58-92201	29	529F3-70401	147
52N52-B0312	125	52N55-42561	182	52N58-92211	29	529F3-70411	148
52N52-B0322	156	52N55-42571	182	52N58-92251	29	529F3-70411	149
52N52-B2071	156	52N55-42701	182	52N58-92401	17	529F3-70421	150
52N52-B2302	156	52N55-42711	182	52N58-92401	17	529F3-82101	200
52N52-B2312	156	52N55-42731	182	52N58-92401	18	529F3-82111	200
52N52-B2342	151	52N55-42741	182	52N58-92401	18	529F5-42041	179
52N52-B2342	152	52N55-42751	182	52N59-02001	31	529F5-42061	179
52N52-B2342	153	52N56-12051	37	52N59-20401	178	529F7-22001	34
52N52-B2402	47	52N56-20101	12	52N59-20412	125	529F7-52241	42
52N52-C3801	133	52N56-22012	45	52N59-20441	178	529F7-52241	44
52N52-C3831	133	52N56-22021	45	52N59-62001	184	53030-52471	34
52N52-C3881	133	52N56-22021	46	52N59-72041	174	53130-12091	34
52N52-C3911	133	52N56-22101	45	52N59-72051	174	532A1-70201	9
52N52-C3921	133	52N56-22201	137	52N59-72061	174	532A1-70201	10
52N52-C3931	133	52N56-22401	45	52N59-72141	174	534A2-74051	187
52N52-C3981	109	52N56-72001	36	52N59-72151	174	534A2-74051	194
52N52-C3981	110	52N56-92001	40	52N59-72161	174	534A2-74051	201
52N52-32001	14	52N56-92101	40	52N59-92101	22	534A2-74301	187
52N52-72101	176	52N56-92201	40	52N59-92501	22	534A2-74301	194
52N52-72201	176	52N56-92211	40	52N59-92501	22	534A2-74301	201
52N52-82401	176	52N57-E2002	46	52U43-72001	17	534A3-82311	176
52N52-82411	176	52N57-E2012	46	52U53-72001	18	534A3-82331	176
52N52-82501	176	52N57-E2012	47	521A2-42001	19	534A3-82341	176
52N52-82511	176	52N57-E2201	46	521A2-42061	39	534A3-82391	176
52N53-72101	14	52N57-E2201	47	52197-40002	85	534A3-82421	176
52N53-72301	14	52N57-E3021	47	52197-42001	85	534A3-82441	176
52N53-82101	176	52N57-20201	33	522A1-02001	183	534A3-82451	176
52N53-82111	176	52N57-20301	33	522A1-02031	183	534A3-82501	176
52N53-82171	176	52N57-20311	33	522A1-10201	2	534A3-82531	176
52N53-82301	176	52N57-22231	33	522A2-42001	19	534A4-22001	101
52N53-82311	176	52N57-22241	33	522A3-82641	176	534A4-22011	101
52N53-82371	176	52N57-22341	33	522A3-82841	176	534A4-22101	101
52N55-00551	103	52N57-50301	38	522A3-83841	176	534A5-00401	103
52N55-02451	21	52N57-52032	42	522A3-83861	176	534A5-00401	103
52N55-12101	100	52N57-52032	43	522A7-22011	34	534A5-00411	103
52N55-12111	100	52N57-52032	44	522B0-92021	4	534A5-43081	182

PARTS NUMBER INDEX

Part No.	Fig.No.	Part No.	Fig.No.	Part No.	Fig.No.	Part No.	Fig.No.
534A5-43091	182	54236-81001	87	54237-42042	60	58106-31011	19
534A7-02001	19	54236-81001	88	54237-42061	60	583A2-B0401	156
534A7-42231	73	54236-81011	87	54237-42072	60	583A2-B2621	156
534A7-50601	42	54236-81011	88	54237-43001	60	617B9-21851	189
534A7-50601	43	54236-81101	91	54237-43011	60	62A89-21811	189
534A7-50601	44	54236-81201	89	54237-43021	72	62A89-21831	189
534A7-72001	17	54236-81201	91	54276-80201	81	62A89-21851	189
534A7-72001	18	54236-81301	91	54276-80301	78	62050-12331	202
534A9-22001	101	54236-81501	92	54276-80401	75	62150-14321	205
534A9-22011	101	54236-81521	94	54276-80401	78	62156-52341	189
534A9-22101	101	54236-81531	92	54276-80501	78	62459-23371	189
534A9-22211	20	54236-81541	90	543G1-02001	183	62459-23371	189
53651-12551	2	54236-81541	92	543G1-02021	183	63110-18921	200
53652-82011	176	54236-81551	92	543G1-02031	183	63130-15301	202
53652-82401	176	54236-81601	90	543G1-02041	183	63130-25614	139
53652-82541	176	54236-81601	92	543G1-02051	183	63130-25614	140
53652-82551	176	54236-81601	92	543G1-02061	183	63130-25614	141
53658-43001	197	54236-81601	94	543G1-02071	183	63130-25614	142
53658-43011	197	54236-83011	75	543G1-02081	183	63130-25614	143
53658-43021	197	54236-83011	76	543G1-02091	183	63130-25614	144
53658-43031	197	54236-83011	78	543G1-02101	183	63130-25614	145
53658-43041	197	54236-83011	79	543G1-02111	183	93956-59279	17
53671-92821	179	54236-83011	81	543G1-02121	183	93956-59279	18
53675-55051	191	54236-83011	82	543G1-02311	183		
53675-55051	205	54236-83011	84	543G1-02331	183		
537A0-52531	126	54236-83011	87	543G1-02341	183		
539A0-82201	10	54236-83011	87	543G1-02401	183		
539A2-82051	176	54236-83011	88	543G1-02411	183		
539A6-22021	19	54236-83011	88	543G1-02451	183		
539A7-52041	41	54236-83021	75	54315-32561	32		
539A7-52101	43	54236-83021	76	55535-42161	179		
539A7-52101	44	54236-83021	78	55593-02371	150		
539A8-22151	35	54236-83021	79	55593-62551	198		
539A9-02011	31	54236-83021	81	55595-42251	182		
539A9-32001	103	54236-83021	82	55597-22111	34		
542F3-80101	136	54236-83021	84	55792-52601	41		
542F3-82011	136	54236-83021	87	55792-52611	41		
542F3-82011	137	54236-83021	87	55792-52621	41		
54236-80101	79	54236-83021	88	55792-52641	41		
54236-80121	82	54236-83021	88	558A9-92001	42		
54236-80131	79	54236-83031	75	558A9-92001	44		
54236-80141	76	54236-83031	76	56110-63521	34		
54236-80141	79	54236-83031	78	57023-72011	70		
54236-80151	79	54236-83031	79	57023-72081	72		
54236-80181	76	54236-83031	81	57045-52151	72		
54236-80181	79	54236-83031	82	57045-52151	72		
54236-80181	79	54236-83031	84	571A3-82361	176		
54236-80181	82	54236-83031	87	571A6-82081	93		
54236-80201	86	54236-83031	87	571G5-02251	103		
54236-80251	85	54236-83031	88	57393-02041	196		
54236-80301	87	54236-83031	88	57393-02041	203		
54236-80311	87	54236-83081	90	57393-72041	70		
54236-80501	88	54236-83081	92	577H2-82021	176		
54236-80511	88	54236-83081	94	577H3-82151	176		
54236-80601	87	54236-83091	90	577H3-82171	176		
54236-80611	87	54236-83091	92	577H3-82181	176		
54236-80701	87	54236-83091	94	577H3-82231	176		
54236-80711	87	54236-83101	90	577H3-82741	176		
54236-80801	87	54236-83101	92	577H5-13051	103		
54236-80811	87	54236-83101	94	581E1-02201	183		

No.PF−0L6B
2006年　12月　　発行
2007年　　5月　　改訂

TCM株式会社
本　社　大阪市西区京町堀1－15－10
発 行　　TCMテクノ株式会社

ISSUED:DECEMBER,2006
REVISED:MAY,2007

TCM CORPORATION
INTERNATIONAL MARKETING DIVISION :　1-15-5, Nishi−shimbashi, Minato−ku, Tokyo
105−0003, Japan
FAX : Japan +81−3−35918152, 3−35918153

無断で転載・複製を禁ず
All rights reserved.

SA−0705001(H)　Printed in Japan